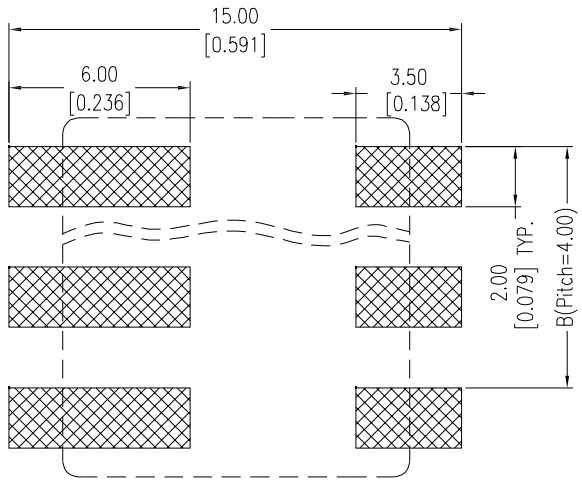

Recommended P.C.B Layout(Top Side)
(PCB BOARD TOLERANCE±0.05)

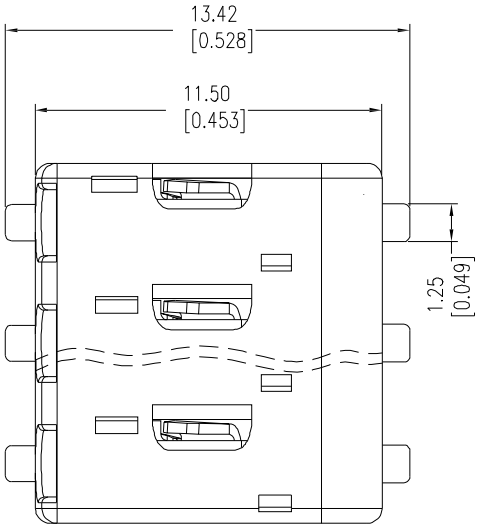

① Notes:
Rated current: 3~9 AMP
Contact resistance: 20MΩ max.
Withstand voltage: 500V AC
Insulation resistance: 1000MΩ min.
Operation temperature: -40°C to +105°C
Solder Temperature: 260°C, 5s
- Solid Wire: AWG #20~#18
-Strand Wire: AWG #20~#18

Contact material: Phosphor Bronze
Contact plating: 100~200u" Matte Tin plated over 50u" Nickel
Insulator material: LCP+30%G.F UL94V-0

3	11.95	8.00
2	7.90	4.00
1	3.95	/
PIN	A	B

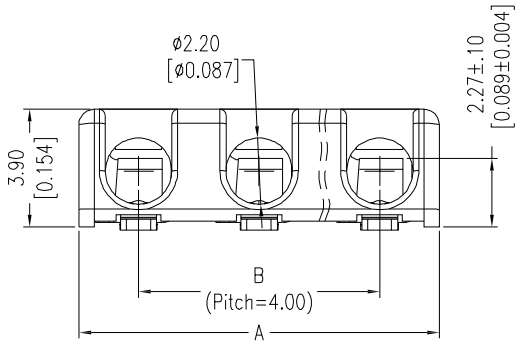

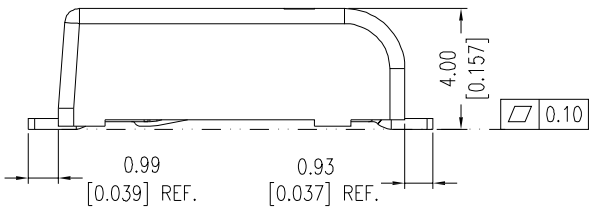

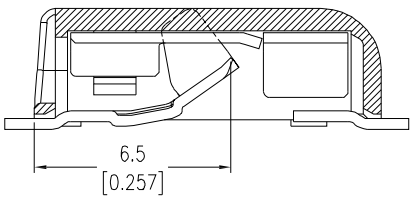

RoHS compliant
Unit: mm

② UL File No.: E198287

Scale	Free
TOLERANCE	
.X	±0.40
.XX	±0.25
.XXX	±0.15
DIM	TOL
Angle	±1.5°

Id.	Modification	Date	Name
②	Add the UL File No.	27.07.2017	Winnie
①	Update note	17.08.2016	Ray
⓪	Drawn	28.01.2016	Ray

	Date	Name
Drawn	28.01.2016	Ray
Approved	27.07.2017	Winnie

ASSMANN WSW components

Customer-No.

ASSMANN WSW-No.
AWBR-400-xx-SR1

Drawing-No.
ASS 7121 CO

rev02

Replace

Sheet

SV4C