7.2 Formulation of Bearing Numbers

Bearing numbers are alphanumeric combinations that indicate the bearing type, boundary dimensions, dimensional and running accuracies, internal clearance, and other related specifications. They consist of basic numbers and supplementary symbols. The boundary dimensions of commonly used bearings mostly conform to the organizational concept of ISO, and the bearing numbers of these standard bearings are specified by JIS B 1513 (Bearing Numbers for Rolling Bearings). Due to a need for more detailed classification, NSK uses auxiliary symbols other than those specified by JIS.

Bearing numbers consist of a basic number and supplementary symbols. The basic number indicates the bearing series(type) and the width and diameter series as shown in Table 7.5. Basic numbers, supplementary symbols, and the meanings of common numbers and symbols are listed in Table 7.6 (Pages A56 and A57). The contact angle symbols and other supplementary designations are shown in successive columns from left to right in Table 7.6. For reference, some examples of bearing designations are shown here:

(Example 1) 6 3 0 8 ZZ C3

- Radial Clearance **C3** (Internal Clearance Symbol)
- Shields on Both Sides (Shield Symbol)
- Bearing Bore **40 mm** (Bore Number)
- Diameter Series **3** } Bearing Series Symbol
- Single-Row Deep Groove Ball Bearing } Bearing Series Symbol

(Example 2) 7 2 2 0 A DB C3

- Axial Clearance **C3**
- Back-to-Back Arrangement
- Contact Angle **30°**
- Bearing Bore **100 mm**
- Diameter Series **2**
- Single-Row Angular Contact Ball Bearing

(Example 3) 1 2 0 6 K +H206X

- Adapter with **25 mm** Bore
- Tapered Bore (Taper **1:12**)
- Bearing Bore **30 mm**
- Diameter Series **2**
- Self-Aligning Ball Bearing

(Example 4) NU 3 1 8 M CM

- Radial Clearance for Electric-Motor Bearings **CM**
- Machined Brass Cage
- Bearing Bore **90 mm**
- Diameter Series **3**
- **NU** Type Cylindrical Roller Bearing

(Example 5) NN 3 0 1 7 K CC1 P4

- Accuracy of ISO **Class 4**
- Radial Clearance in Non-Interchangeable Cylindrical Roller Bearings **CC1**
- Tapered Bore (Taper **1:12**)
- Bearing Bore **85 mm**
- Diameter Series **0**
- Width Series **3**
- **NN** Type Cylindrical Roller Bearing

(Example 6) HR 3 0 2 0 7 J

- Small Diameter of Cup Raceway and Contact Angle Conform to ISO
- Bearing Bore **35 mm**
- Diameter Series **2**
- Width Series **0**
- Tapered Roller Bearing
- High Capacity Bearing

(Example 7) 2 4 0 /1000 M K30 E4 C3

- Radial Clearance **C3**
- Outer Ring with Oil Groove and Oil Holes
- Tapered Bore (Taper **1:30**)
- Machined Brass Cage
- Bearing Bore **1000 mm**
- Diameter Series **0**
- Width Series **4**
- Spherical Roller Bearing

(Example 8) 5 1 2 1 5

- Bearing Bore **75 mm**
- Diameter Series **2**
- Height Series **1**
- Thrust Ball Bearing

Table 7. 5 Bearing Series Symbols

Bearing Type	Bearing Series Symbols	Type Symbols	Dimension Symbols: Width Symbols	Dimension Symbols: Diameter Symbols
Single-Row Deep Groove Ball Bearings	**68**	6	(1)	8
	69	6	(1)	9
	60	6	(1)	0
	62	6	(0)	2
	63	6	(0)	3
Single-Row Angular Contact Ball Bearings	**79**	7	(1)	9
	70	7	(1)	0
	72	7	(0)	2
	73	7	(0)	3
Self-Aligning Ball Bearings	**12**	1	(0)	2
	13	1	(0)	3
	22	(1)	2	2
	23	(1)	2	3
Single-Row Cylindrical Roller Bearings	**NU10**	NU	1	0
	NU2	NU	(0)	2
	NU22	NU	2	2
	NU3	NU	(0)	3
	NU23	NU	2	3
	NU4	NU	(0)	4
	NJ2	NJ	(0)	2
	NJ22	NJ	2	2
	NJ3	NJ	(0)	3
	NJ23	NJ	2	3
	NJ4	NJ	(0)	4
	NUP2	NUP	(0)	2
	NUP22	NUP	2	2
	NUP3	NUP	(0)	3
	NUP23	NUP	2	3
	NUP4	NUP	(0)	4
	N10	N	1	0
	N2	N	(0)	2
	N3	N	(0)	3
	N4	N	(0)	4
	NF2	NF	(0)	2
	NF3	NF	(0)	3
	NF4	NF	(0)	4
Double-Row Cylindrical Roller Bearings	**NNU49**	NNU	4	9
	NN30	NN	3	0
Needle Roller Bearings	**NA48**	NA	4	8
	NA49	NA	4	9
	NA59	NA	5	9
	NA69	NA	6	9
Tapered Roller Bearings	**329**	3	2	9
	320	3	2	0
	330	3	3	0
	331	3	3	1
	302	3	0	2
	322	3	2	2
	332	3	3	2
	303	3	0	3
	323	3	2	3
Spherical Roller Bearings	**230**	2	3	0
	231	2	3	1
	222	2	2	2
	232	2	3	2
	213 (1)	2	0	3
	223	2	2	3
Thrust Ball Bearings with Flat Seats	**511**	5	1	1
	512	5	1	2
	513	5	1	3
	514	5	1	4
	522	5	2	2
	523	5	2	3
	524	5	2	4
Spherical Thrust Roller Bearings	**292**	2	9	2
	293	2	9	3
	294	2	9	4

Note (1) Bearing Series Symbol 213 should logically be 203, but customarily it is numbered 213.
Remarks Numbers in ( ) in the column of width symbols are usually omitted from the bearing number.

9.2 Bearing Internal Clearances

9.2.1 Internal Clearances and Their Standards

The internal clearance in rolling bearings in operation greatly influences bearing performance including fatigue life, vibration, noise, heat-generation, etc. Consequently, the selection of the proper internal clearance is one of the most important tasks when choosing a bearing after the type and size have been determined.

This bearing internal clearance is the combined clearances between the inner/outer rings and rolling elements. The radial and axial clearances are defined as the total amount that one ring can be displaced relative to the other in the radial and axial directions respectively (Fig. 9.1).

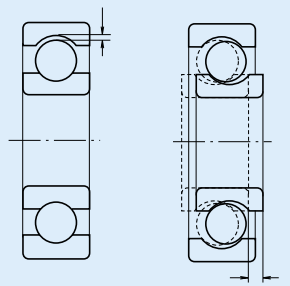

Radial Clearance　　Axial Clearance

Table 9.8 Bearing Internal Clearance

To obtain accurate measurements, the clearance is generally measured by applying a specified measuring load on the bearing; therefore, the measured clearance (sometimes called "measured clearance" to make a distinction) is always slightly larger than the theoretical internal clearance (called "geometrical clearance" for radial bearings) by the amount of elastic deformation caused by the measuring load.

Therefore, the theoretical internal clearance may be obtained by correcting the measured clearance by the amount of elastic deformation. However, in the case of roller bearings this elastic deformation is negligibly small.

Usually the clearance before mounting is the one specified as the theoretical internal clearance.

In Table 9.8, reference table and page numbers are listed by bearing types.

Table 9.8 Index for Radial Internal Clearances by Bearing Types

Bearing Types		Table Number	Page Number
Deep Groove Ball Bearings		9.9	A89
Extra Small and Miniature Ball Bearings		9.10	A89
Magneto Bearings		9.11	A89
Self-Aligning Ball Bearings		9.12	A90
Deep Groove Ball Bearings	For Motors	9.13.1	A90
Cylindrical Roller Bearings	For Motors	9.13.2	A90
Cylindrical Roller Bearings	With Cylindrical Bores With Cylindrical Bores (Matched) With Tapered Bores (Matched)	9.14	A91
Spherical Roller Bearings	With Cylindrical Bores With Tapered Bores	9.15	A92
Double-Row and Combined Tapered Roller Bearings		9.15	A93
Combined Angular Contact Ball Bearings (1)		9.17	A94
Four-Point Contact Ball Bearings (1)		9.18	A94

Note (1) Values given are axial clearances.

Table 9.9 Radial Internal Clearances in Deep Groove Ball Bearings

Units : μm

Nominal Bore Diameter d (mm)		Clearance									
		C2		CN		C3		C4		C5	
over	incl.	min.	max.	min.	max.	min.	max.	min.	max.	min.	max.
10 only		0	7	2	13	8	23	14	29	20	37
10	**18**	0	9	3	18	11	25	18	33	25	45
18	**24**	0	10	5	20	13	28	20	36	28	48
24	**30**	1	11	5	20	13	28	23	41	30	53
30	**40**	1	11	6	20	15	33	28	46	40	64
40	**50**	1	11	6	23	18	36	30	51	45	73
50	**65**	1	15	8	28	23	43	38	61	55	90
65	**80**	1	15	10	30	25	51	46	71	65	105
80	**100**	1	18	12	36	30	58	53	84	75	120
100	**120**	2	20	15	41	36	66	61	97	90	140
120	**140**	2	23	18	48	41	81	71	114	105	160
140	**160**	2	23	18	53	46	91	81	130	120	180
160	**180**	2	25	20	61	53	102	91	147	135	200
180	**200**	2	30	25	71	63	117	107	163	150	230
200	**225**	2	35	25	85	75	140	125	195	175	265
225	**250**	2	40	30	95	85	160	145	225	205	300
250	**280**	2	45	35	105	90	170	155	245	225	340
280	**315**	2	55	40	115	100	190	175	270	245	370
315	**355**	3	60	45	125	110	210	195	300	275	410
355	**400**	3	70	55	145	130	240	225	340	315	460
400	**450**	3	80	60	170	150	270	250	380	350	510
450	**500**	3	90	70	190	170	300	280	420	390	570
500	**560**	10	100	80	210	190	330	310	470	440	630
560	**630**	10	110	90	230	210	360	340	520	490	690
630	**710**	20	130	110	260	240	400	380	570	540	760
710	**800**	20	140	120	290	270	450	430	630	600	840

Remarks To obtain the measured values, use the clearance correction for radial clearance increase caused by the measuring load in the table below.
For the C2 clearance class, the smaller value should be used for bearings with minimum clearance and the larger value for bearings near the maximum clearance range.

Units : μm

Nominal Bore Dia. d (mm)		Measuring Load		Radial Clearance Correction Amount				
over	incl.	(N)	{kgf}	C2	CN	C3	C4	C5
10 (incl)	**18**	24.5	{2.5}	3 to 4	4	4	4	4
18	**50**	49	{5}	4 to 5	5	6	6	6
50	**280**	147	{15}	6 to 8	8	9	9	9

Remarks For values exceeding 280 mm, please contact NSK.

Table 9.10 Radial Internal Clearances in Extra Small and Miniature Ball Bearings

Units : μm

Clearance Symbol	MC1		MC2		MC3		MC4		MC5		MC6	
	min.	max.	min.	max.	min.	max.	min.	max.	min.	max.	min.	max.
Clearance	0	5	3	8	5	10	8	13	13	20	20	28

Remarks
1. The standard clearance is MC3.
2. To obtain the measured value, add correction amount in the table below.

Units : μm

Clearance Symbol	MC1	MC2	MC3	MC4	MC5	MC6
Clearance Correction Value	1	1	1	1	2	2

The measuring loads are as follows :
For miniature ball bearings*
2.5 N {0.25 kgf}
For extra small ball bearings*
4.4 N {0.45 kgf}
*For their classification, refer to Table 1 on Page B 31.

Table 9.11 Radial Internal Clearances in Magneto Bearings

Units : μm

Nominal Bore Diameter d (mm)		Bearing Series	Clearance	
over	incl.		min.	max.
2.5	**30**	EN	10	50
		E	30	60

Bore Diameter 10 – 22 mm

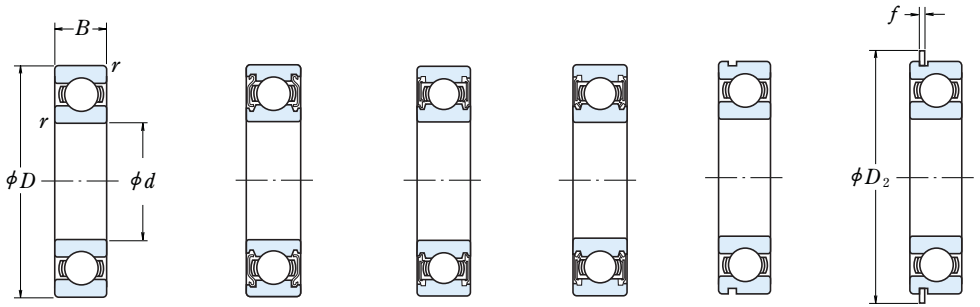

Open Type | Shielded Type ZZ | Non-Contact Sealed Type VV | Contact Sealed Type DD · DDU | With Snap Ring Groove N | With Snap Ring NR

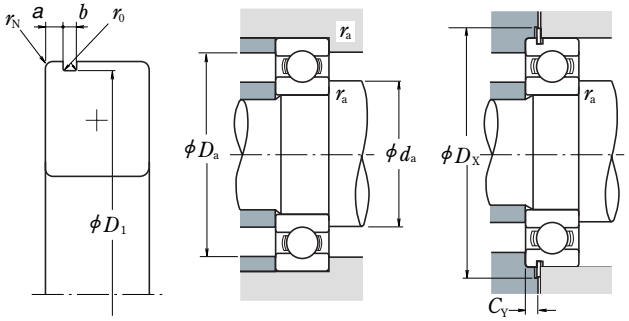

Dynamic Equivalent Load

$P = XF_r + YF_a$

$\frac{f_0F_a}{C_{0r}}$	e	$\frac{F_a}{F_r} \leqq e$		$\frac{F_a}{F_r} > e$	
		X	Y	X	Y
0.172	0.19	1	0	0.56	2.30
0.345	0.22	1	0	0.56	1.99
0.689	0.26	1	0	0.56	1.71
1.03	0.28	1	0	0.56	1.55
1.38	0.30	1	0	0.56	1.45
2.07	0.34	1	0	0.56	1.31
3.45	0.38	1	0	0.56	1.15
5.17	0.42	1	0	0.56	1.04
6.89	0.44	1	0	0.56	1.00

Static Equivalent Load

$\frac{F_a}{F_r} > 0.8,\ P_0 = 0.6F_r + 0.5F_a$

$\frac{F_a}{F_r} \leqq 0.8,\ P_0 = F_r$

Boundary Dimensions (mm)				Basic Load Ratings (N)		{kgf}		Factor	Limiting Speeds (min⁻¹) Grease		Oil	Bearing Numbers				With Snap Ring Groove	With Snap Ring	Snap Ring Groove Dimensions (1) (mm)					Snap Ring (1) Dimensions (mm)		Abutment and Fillet Dimensions (mm)						Mass (kg)
d	D	B	r min.	C_r	C_{0r}	C_r	C_{0r}	f_0	Open Z · ZZ V · VV	DU DDU	Open Z	Open	Shielded	Sealed				a max.	b min.	D_1 max.	r_0 max.	r_N min.	D_2 max.	f max.	d_a(2) min.	d_a(2) max.	D_a(2) max.	r_a max.	D_x min.	C_Y max.	approx.
10	19	5	0.3	1 720	840	175	86	14.8	34 000	24 000	40 000	**6800**	**ZZ**	**VV**	**DD**	—	—	—	—	—	—	—	—	—	12	12	17	0.3	—	—	0.005
	22	6	0.3	2 700	1 270	275	129	14.0	32 000	22 000	38 000	**6900**	**ZZ**	**VV**	**DD**	**N**(3)	**NR**(3)	1.05	0.8	20.8	0.2	0.2	24.8	0.7	12	12.5	20	0.3	25.5	1.5	0.009
	26	8	0.3	4 550	1 970	465	201	12.4	30 000	22 000	36 000	**6000**	**ZZ**	**VV**	**DDU**	**N**(4)	**NR**(4)	1.35	0.87	24.5	0.2	0.3	28.7	0.84	12	13	24	0.3	29.4	1.9	0.018
	30	9	0.6	5 100	2 390	520	244	13.2	24 000	18 000	30 000	**6200**	**ZZ**	**VV**	**DDU**	**N**	**NR**	2.06	1.35	28.17	0.4	0.5	34.7	1.12	14	16	26	0.6	35.5	2.9	0.032
	35	11	0.6	8 100	3 450	825	350	11.2	22 000	17 000	26 000	**6300**	**ZZ**	**VV**	**DDU**	**N**	**NR**	2.06	1.35	33.17	0.4	0.5	39.7	1.12	14	16.5	31	0.6	40.5	2.9	0.052
12	21	5	0.3	1 920	1 040	195	106	15.3	32 000	20 000	38 000	**6801**	**ZZ**	**VV**	**DD**	—	—	—	—	—	—	—	—	—	14	14	19	0.3	—	—	0.006
	24	6	0.3	2 890	1 460	295	149	14.5	30 000	20 000	36 000	**6901**	**ZZ**	**VV**	**DD**	**N**	**NR**	1.05	0.8	22.8	0.2	0.2	26.8	0.7	14	14.5	22	0.3	27.5	1.5	0.010
	28	7	0.3	5 100	2 370	520	241	13.0	28 000	—	32 000	**16001**	—	—	—	—	—	—	—	—	—	—	—	—	14	—	26	0.3	—	—	0.019
	28	8	0.3	5 100	2 370	520	241	13.0	28 000	18 000	32 000	**6001**	**ZZ**	**VV**	**DDU**	**N**(4)	**NR**(4)	1.35	0.87	26.5	0.2	0.3	30.7	0.84	14	15.5	26	0.3	31.4	1.9	0.022
	32	10	0.6	6 800	3 050	695	310	12.3	22 000	17 000	28 000	**6201**	**ZZ**	**VV**	**DDU**	**N**	**NR**	2.06	1.35	30.15	0.4	0.5	36.7	1.12	16	17	28	0.6	37.5	2.9	0.037
	37	12	1	9 700	4 200	990	425	11.1	20 000	16 000	24 000	**6301**	**ZZ**	**VV**	**DDU**	**N**	**NR**	2.06	1.35	34.77	0.4	0.5	41.3	1.12	17	18	32	1	42	2.9	0.060
15	24	5	0.3	2 070	1 260	212	128	15.8	28 000	17 000	34 000	**6802**	**ZZ**	**VV**	**DD**	—	—	—	—	—	—	—	—	—	17	17	22	0.3	—	—	0.007
	28	7	0.3	4 350	2 260	440	230	14.3	26 000	17 000	30 000	**6902**	**ZZ**	**VV**	**DD**	**N**	**NR**	1.3	0.95	26.7	0.25	0.3	30.8	0.85	17	17	26	0.3	31.5	1.8	0.015
	32	8	0.3	5 600	2 830	570	289	13.9	24 000	—	28 000	**16002**	—	—	—	—	—	—	—	—	—	—	—	—	17	—	30	0.3	—	—	0.027
	32	9	0.3	5 600	2 830	570	289	13.9	24 000	15 000	28 000	**6002**	**ZZ**	**VV**	**DDU**	**N**	**NR**	2.06	1.35	30.15	0.4	0.3	36.7	1.12	17	19	30	0.3	37.5	2.9	0.031
	35	11	0.6	7 650	3 750	780	380	13.2	20 000	14 000	24 000	**6202**	**ZZ**	**VV**	**DDU**	**N**	**NR**	2.06	1.35	33.17	0.4	0.5	39.7	1.12	19	20.5	31	0.6	40.5	2.9	0.045
	42	13	1	11 400	5 450	1 170	555	12.3	17 000	13 000	20 000	**6302**	**ZZ**	**VV**	**DDU**	**N**	**NR**	2.06	1.35	39.75	0.4	0.5	46.3	1.12	20	22.5	37	1	47	2.9	0.083
17	26	5	0.3	2 630	1 570	268	160	15.7	26 000	15 000	30 000	**6803**	**ZZ**	**VV**	**DD**	—	—	—	—	—	—	—	—	—	19	19	24	0.3	—	—	0.007
	30	7	0.3	4 600	2 550	470	260	14.7	24 000	15 000	28 000	**6903**	**ZZ**	**VV**	**DDU**	**N**	**NR**	1.3	0.95	28.7	0.25	0.3	32.8	0.85	19	19.5	28	0.3	33.5	1.8	0.017
	35	8	0.3	6 000	3 250	610	330	14.4	22 000	—	26 000	**16003**	—	—	—	—	—	—	—	—	—	—	—	—	19	—	33	0.3	—	—	0.033
	35	10	0.3	6 000	3 250	610	330	14.4	22 000	13 000	26 000	**6003**	**ZZ**	**VV**	**DDU**	**N**	**NR**	2.06	1.35	33.17	0.4	0.3	39.7	1.12	19	21.5	33	0.3	40.5	2.9	0.041
	40	12	0.6	9 550	4 800	975	490	13.2	17 000	12 000	20 000	**6203**	**ZZ**	**VV**	**DDU**	**N**	**NR**	2.06	1.35	38.1	0.4	0.5	44.6	1.12	21	23.5	36	0.6	45.5	2.9	0.067
	47	14	1	13 600	6 650	1 390	675	12.4	15 000	11 000	18 000	**6303**	**ZZ**	**VV**	**DDU**	**N**	**NR**	2.46	1.35	44.6	0.4	0.5	52.7	1.12	22	25.5	42	1	53.5	3.3	0.113
20	32	7	0.3	4 000	2 470	410	252	15.5	22 000	13 000	26 000	**6804**	**ZZ**	**VV**	**DD**	**N**	**NR**	1.3	0.95	30.7	0.25	0.3	34.8	0.85	22	22	30	0.3	35.5	1.8	0.017
	37	9	0.3	6 400	3 700	650	375	14.7	19 000	12 000	22 000	**6904**	**ZZ**	**VV**	**DDU**	**N**	**NR**	1.7	0.95	35.7	0.25	0.3	39.8	0.85	22	24	35	0.3	40.5	2.3	0.037
	42	8	0.3	7 900	4 450	810	455	14.5	18 000	—	20 000	**16004**	—	—	—	—	—	—	—	—	—	—	—	—	22	—	40	0.3	—	—	0.048
	42	12	0.6	9 400	5 000	955	510	13.8	18 000	11 000	20 000	**6004**	**ZZ**	**VV**	**DDU**	**N**	**NR**	2.06	1.35	39.75	0.4	0.5	46.3	1.12	24	25.5	38	0.6	47	2.9	0.068
	47	14	1	12 800	6 600	1 300	670	13.1	15 000	11 000	18 000	**6204**	**ZZ**	**VV**	**DDU**	**N**	**NR**	2.46	1.35	44.6	0.4	0.5	52.7	1.12	25	26.5	42	1	53.5	3.3	0.107
	52	15	1.1	15 900	7 900	1 620	805	12.4	14 000	10 000	17 000	**6304**	**ZZ**	**VV**	**DDU**	**N**	**NR**	2.46	1.35	49.73	0.4	0.5	57.9	1.12	26.5	28	45.5	1	58.5	3.3	0.145
22	44	12	0.6	9 400	5 050	960	515	14.0	17 000	11 000	20 000	**60/22**	**ZZ**	**VV**	**DDU**	**N**	**NR**	2.06	1.35	41.75	0.4	0.5	48.3	1.12	26	26.5	40	0.6	49	2.9	0.074
	50	14	1	12 900	6 800	1 320	695	13.5	14 000	9 500	16 000	**62/22**	**ZZ**	**VV**	**DDU**	**N**	**NR**	2.46	1.35	47.6	0.4	0.5	55.7	1.12	27	29.5	45	1	56.5	3.3	0.119
	56	16	1.1	18 400	9 250	1 870	940	12.4	13 000	9 500	16 000	**63/22**	**ZZ**	**VV**	**DDU**	**N**	**NR**	2.46	1.35	53.6	0.4	0.5	61.7	1.12	28.5	30.5	49.5	1	62.5	3.3	0.179

Notes (1) For tolerances for the snap ring grooves and snap ring dimensions, refer to Pages **A50** to **A53**.
(2) When heavy axial loads are applied, increase d_a and decrease D_a from the above values.
(3) Ring types N and NR applicable only to open-type bearings.
(4) Snap ring groove dimensions and snap ring dimensions are not conformed to ISO15.

Remarks 1. Diameter Series 7 (extra thin section bearings) are also available, please contact NSK.
2. When using bearings with rotating outer rings, contact NSK if they are sealed, shielded, or have snap rings.

Bore Diameter 25 – 45 mm

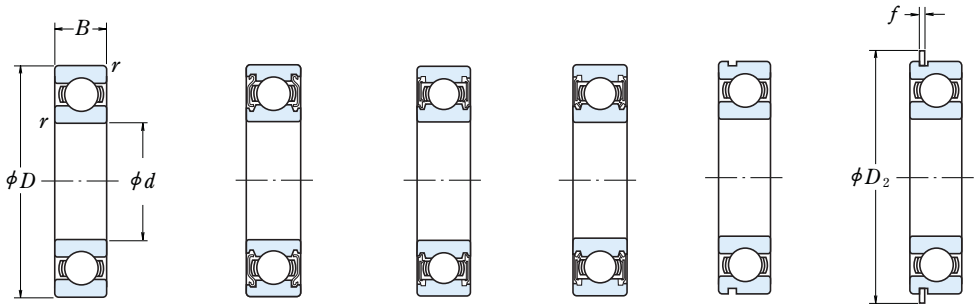

Open Type | Shielded Type ZZ | Non-Contact Sealed Type VV | Contact Sealed Type DD · DDU | With Snap Ring Groove N | With Snap Ring NR

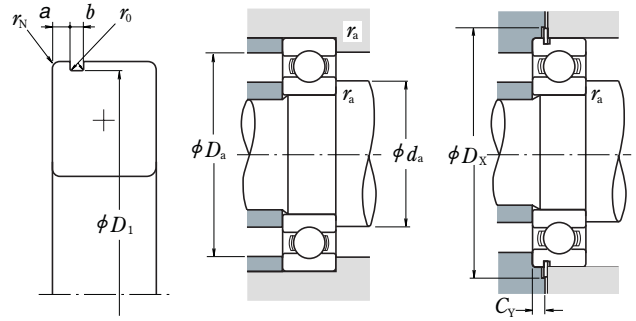

Dynamic Equivalent Load

$P = XF_r + YF_a$

$\frac{f_0F_a}{C_{0r}}$	e	$\frac{F_a}{F_r} \leqq e$		$\frac{F_a}{F_r} > e$	
		X	Y	X	Y
0.172	0.19	1	0	0.56	2.30
0.345	0.22	1	0	0.56	1.99
0.689	0.26	1	0	0.56	1.71
1.03	0.28	1	0	0.56	1.55
1.38	0.30	1	0	0.56	1.45
2.07	0.34	1	0	0.56	1.31
3.45	0.38	1	0	0.56	1.15
5.17	0.42	1	0	0.56	1.04
6.89	0.44	1	0	0.56	1.00

Static Equivalent Load

$\frac{F_a}{F_r} > 0.8,\ P_0 = 0.6F_r + 0.5F_a$

$\frac{F_a}{F_r} \leqq 0.8,\ P_0 = F_r$

Boundary Dimensions (mm)				Basic Load Ratings (N)		{kgf}		Factor	Limiting Speeds (min⁻¹) Grease		Oil	Bearing Numbers				With Snap Ring Groove	With Snap Ring	Snap Ring Groove Dimensions (1) (mm)					Snap Ring (1) Dimensions (mm)		Abutment and Fillet Dimensions (mm)						Mass (kg)
d	D	B	r min.	C_r	C_{0r}	C_r	C_{0r}	f_0	Open Z · ZZ V · VV	DU DDU	Open Z	Open	Shielded	Sealed				a max.	b min.	D_1 max.	r_0 max.	r_N min.	D_2 max.	f max.	d_a(2) min.	d_a(2) max.	D_a(2) max.	r_a max.	D_x min.	C_Y max.	approx.
25	37	7	0.3	4 500	3 150	455	320	16.1	18 000	10 000	22 000	**6805**	**ZZ**	**VV**	**DD**	**N**	**NR**	1.3	0.95	35.7	0.25	0.3	39.8	0.85	27	27	35	0.3	40.5	1.8	0.021
	42	9	0.3	7 050	4 550	715	460	15.4	16 000	10 000	19 000	**6905**	**ZZ**	**VV**	**DDU**	**N**	**NR**	1.7	0.95	40.7	0.25	0.3	44.8	0.85	27	28.5	40	0.3	45.5	2.3	0.042
	47	8	0.3	8 850	5 600	905	570	15.1	15 000	—	18 000	**16005**	—	—	—	—	—	—	—	—	—	—	—	—	27	—	45	0.3	—	—	0.059
	47	12	0.6	10 100	5 850	1 030	595	14.5	15 000	9 500	18 000	**6005**	**ZZ**	**VV**	**DDU**	**N**	**NR**	2.06	1.35	44.6	0.4	0.5	52.7	1.12	29	30	43	0.6	53.5	2.9	0.079
	52	15	1	14 000	7 850	1 430	800	13.9	13 000	9 000	15 000	**6205**	**ZZ**	**VV**	**DDU**	**N**	**NR**	2.46	1.35	49.73	0.4	0.5	57.9	1.12	30	32	47	1	58.5	3.3	0.129
	62	17	1.1	20 600	11 200	2 100	1 150	13.2	11 000	8 000	13 000	**6305**	**ZZ**	**VV**	**DDU**	**N**	**NR**	3.28	1.9	59.61	0.6	0.5	67.7	1.7	31.5	36	55.5	1	68.5	4.6	0.235
28	52	12	0.6	12 500	7 400	1 270	755	14.5	14 000	8 500	16 000	**60/28**	**ZZ**	**VV**	**DDU**	**N**	**NR**	2.06	1.35	49.73	0.4	0.5	57.9	1.12	32	34	48	0.6	58.5	2.9	0.096
	58	16	1	16 600	9 500	1 700	970	13.9	12 000	8 000	14 000	**62/28**	**ZZ**	**VV**	**DDU**	**N**	**NR**	2.46	1.35	55.6	0.4	0.5	63.7	1.12	33	35.5	53	1	64.5	3.3	0.175
	68	18	1.1	26 700	14 000	2 730	1 430	12.4	10 000	7 500	13 000	**63/28**	**ZZ**	**VV**	**DDU**	**N**	**NR**	3.28	1.9	64.82	0.6	0.5	74.6	1.7	34.5	38	61.5	1	76	4.6	0.287
30	42	7	0.3	4 700	3 650	480	370	16.4	15 000	9 000	18 000	**6806**	**ZZ**	**VV**	**DD**	**N**	**NR**	1.3	0.95	40.7	0.25	0.3	44.8	0.85	32	32	40	0.3	45.5	1.8	0.024
	47	9	0.3	7 250	5 000	740	510	15.8	14 000	8 500	17 000	**6906**	**ZZ**	**VV**	**DDU**	**N**	**NR**	1.7	0.95	45.7	0.25	0.3	49.8	0.85	32	34	45	0.3	50.5	2.3	0.052
	55	9	0.3	11 200	7 350	1 150	750	15.2	13 000	—	15 000	**16006**	—	—	—	—	—	—	—	—	—	—	—	—	32	—	53	0.3	—	—	0.087
	55	13	1	13 200	8 300	1 350	845	14.7	13 000	8 000	15 000	**6006**	**ZZ**	**VV**	**DDU**	**N**	**NR**	2.08	1.35	52.6	0.4	0.5	60.7	1.12	35	36.5	50	1	61.5	2.9	0.116
	62	16	1	19 500	11 300	1 980	1 150	13.8	11 000	7 500	13 000	**6206**	**ZZ**	**VV**	**DDU**	**N**	**NR**	3.28	1.9	59.61	0.6	0.5	67.7	1.7	35	38.5	57	1	68.5	4.6	0.199
	72	19	1.1	26 700	15 000	2 720	1 530	13.3	9 500	6 700	12 000	**6306**	**ZZ**	**VV**	**DDU**	**N**	**NR**	3.28	1.9	68.81	0.6	0.5	78.6	1.7	36.5	42.5	65.5	1	80	4.6	0.345
32	58	13	1	15 100	9 150	1 530	935	14.5	12 000	7 500	14 000	**60/32**	**ZZ**	**VV**	**DDU**	**N**	**NR**	2.08	1.35	55.6	0.4	0.5	63.7	1.12	37	38.5	53	1	64.5	2.9	0.122
	65	17	1	20 700	11 600	2 120	1 190	13.6	10 000	7 100	12 000	**62/32**	**ZZ**	**VV**	**DDU**	**N**	**NR**	3.28	1.9	62.6	0.6	0.5	70.7	1.7	37	40	60	1	71.5	4.6	0.225
	75	20	1.1	29 900	17 000	3 050	1 730	13.2	9 000	6 300	11 000	**63/32**	**ZZ**	**VV**	**DDU**	**N**	**NR**	3.28	1.9	71.83	0.6	0.5	81.6	1.7	38.5	44.5	68.5	1	83	4.6	0.389
35	47	7	0.3	4 900	4 100	500	420	16.7	14 000	7 500	16 000	**6807**	**ZZ**	**VV**	**DD**	**N**	**NR**	1.3	0.95	45.7	0.25	0.3	49.8	0.85	37	37	45	0.3	50.5	1.8	0.027
	55	10	0.6	10 600	7 250	1 080	740	15.5	12 000	7 500	15 000	**6907**	**ZZ**	**VV**	**DDU**	**N**	**NR**	1.7	0.95	53.7	0.25	0.5	57.8	0.85	39	39	51	0.6	58.5	2.3	0.075
	62	9	0.3	11 700	8 200	1 190	835	15.6	11 000	—	13 000	**16007**	—	—	—	—	—	—	—	—	—	—	—	—	37	—	60	0.3	—	—	0.107
	62	14	1	16 000	10 300	1 630	1 050	14.8	11 000	6 700	13 000	**6007**	**ZZ**	**VV**	**DDU**	**N**	**NR**	2.08	1.9	59.61	0.6	0.5	67.7	1.7	40	41.5	57	1	68.5	3.4	0.151
	72	17	1.1	25 700	15 300	2 620	1 560	13.8	9 500	6 300	11 000	**6207**	**ZZ**	**VV**	**DDU**	**N**	**NR**	3.28	1.9	68.81	0.6	0.5	78.6	1.7	41.5	44.5	65.5	1	80	4.6	0.284
	80	21	1.5	33 500	19 200	3 400	1 960	13.2	8 500	6 000	10 000	**6307**	**ZZ**	**VV**	**DDU**	**N**	**NR**	3.28	1.9	76.81	0.6	0.5	86.6	1.7	43	47	72	1.5	88	4.6	0.464
40	52	7	0.3	6 350	5 550	650	565	17.0	12 000	6 700	14 000	**6808**	**ZZ**	**VV**	**DD**	**N**	**NR**	1.3	0.95	50.7	0.25	0.3	54.8	0.85	42	42	50	0.3	55.5	1.8	0.031
	62	12	0.6	13 700	10 000	1 390	1 020	15.7	11 000	6 300	13 000	**6908**	**ZZ**	**VV**	**DDU**	**N**	**NR**	1.7	0.95	60.7	0.25	0.5	64.8	0.85	44	46	58	0.6	65.5	2.3	0.112
	68	9	0.3	12 600	9 650	1 290	985	16.0	10 000	—	12 000	**16008**	—	—	—	—	—	—	—	—	—	—	—	—	42	—	66	0.3	—	—	0.13
	68	15	1	16 800	11 500	1 710	1 180	15.3	10 000	6 000	12 000	**6008**	**ZZ**	**VV**	**DDU**	**N**	**NR**	2.49	1.9	64.82	0.6	0.5	74.6	1.7	45	47.5	63	1	76	3.8	0.19
	80	18	1.1	29 100	17 900	2 970	1 820	14.0	8 500	5 600	10 000	**6208**	**ZZ**	**VV**	**DDU**	**N**	**NR**	3.28	1.9	76.81	0.6	0.5	86.6	1.7	46.5	50.5	73.5	1	88	4.6	0.366
	90	23	1.5	40 500	24 000	4 150	2 450	13.2	7 500	5 300	9 000	**6308**	**ZZ**	**VV**	**DDU**	**N**	**NR**	3.28	2.7	86.79	0.6	0.5	96.5	2.46	48	53	82	1.5	98	5.4	0.636
45	58	7	0.3	6 600	6 150	670	625	17.2	11 000	6 000	13 000	**6809**	**ZZ**	**VV**	**DD**	**N**	**NR**	1.3	0.95	56.7	0.25	0.3	60.8	0.85	47	47.5	56	0.3	61.5	1.8	0.038
	68	12	0.6	14 100	10 900	1 440	1 110	15.9	9 500	5 600	12 000	**6909**	**ZZ**	**VV**	**DDU**	**N**	**NR**	1.7	0.95	66.7	0.25	0.5	70.8	0.85	49	50	64	0.6	72	2.3	0.126
	75	10	0.6	14 900	11 400	1 520	1 160	15.9	9 000	—	11 000	**16009**	—	—	—	—	—	—	—	—	—	—	—	—	49	—	71	0.6	—	—	0.167
	75	16	1	20 900	15 200	2 140	1 550	15.3	9 000	5 300	11 000	**6009**	**ZZ**	**VV**	**DDU**	**N**	**NR**	2.49	1.9	71.83	0.6	0.5	81.6	1.7	50	53.5	70	1	83	3.8	0.241
	85	19	1.1	31 500	20 400	3 200	2 080	14.4	7 500	5 300	9 000	**6209**	**ZZ**	**VV**	**DDU**	**N**	**NR**	3.28	1.9	81.81	0.6	0.5	91.6	1.7	51.5	55.5	78.5	1	93	4.6	0.42
	100	25	1.5	53 000	32 000	5 400	3 250	13.1	6 700	4 800	8 000	**6309**	**ZZ**	**VV**	**DDU**	**N**	**NR**	3.28	2.7	96.8	0.6	0.5	106.5	2.46	53	61.5	92	1.5	108	5.4	0.829

Notes (1) For tolerances for the snap ring grooves and snap ring dimensions, refer to Pages **A50** to **A53**.
(2) When heavy axial loads are applied, increase d_a and decrease D_a from the above values.

Remarks 1. Diameter Series 7 (extra thin section bearings) are also available, please contact NSK.
2. When using bearings with rotating outer rings, contact NSK if they are sealed, shielded, or have snap rings.

Bore Diameter 50 – 75 mm

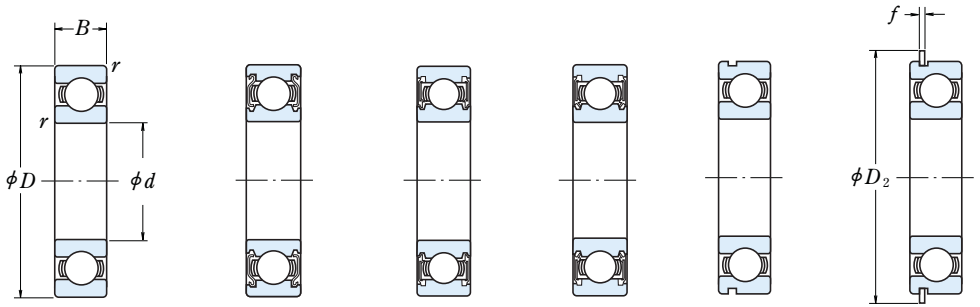

Open Type | Shielded Type ZZ | Non-Contact Sealed Type VV | Contact Sealed Type DD · DDU | With Snap Ring Groove N | With Snap Ring NR

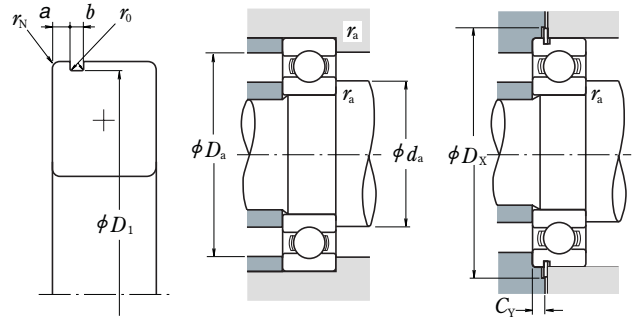

Dynamic Equivalent Load

$P = XF_r + YF_a$

$\frac{f_0F_a}{C_{0r}}$	e	$\frac{F_a}{F_r} \leqq e$		$\frac{F_a}{F_r} > e$	
		X	Y	X	Y
0.172	0.19	1	0	0.56	2.30
0.345	0.22	1	0	0.56	1.99
0.689	0.26	1	0	0.56	1.71
1.03	0.28	1	0	0.56	1.55
1.38	0.30	1	0	0.56	1.45
2.07	0.34	1	0	0.56	1.31
3.45	0.38	1	0	0.56	1.15
5.17	0.42	1	0	0.56	1.04
6.89	0.44	1	0	0.56	1.00

Static Equivalent Load

$\frac{F_a}{F_r} > 0.8,\ P_0 = 0.6F_r + 0.5F_a$

$\frac{F_a}{F_r} \leqq 0.8,\ P_0 = F_r$

Boundary Dimensions (mm)				Basic Load Ratings (N)		Basic Load Ratings {kgf}		Factor	Limiting Speeds (min⁻¹) Grease		Limiting Speeds (min⁻¹) Oil	Bearing Numbers				With Snap Ring Groove	With Snap Ring	Snap Ring Groove Dimensions (1) (mm)					Snap Ring (1) Dimensions (mm)		Abutment and Fillet Dimensions (mm)						Mass (kg)
d	D	B	r min.	C_r	C_{0r}	C_r	C_{0r}	f_0	Open Z · ZZ V · VV	DU DDU	Open Z	Open	Shielded	Sealed				a max.	b min.	D_1 max.	r_0 max.	r_N min.	D_2 max.	f max.	d_a(2) min.	d_a(2) max.	D_a(2) max.	r_a max.	D_x min.	C_Y max.	approx.
50	65	7	0.3	6 400	6 200	655	635	17.2	9 500	5 300	11 000	**6810**	**ZZ**	**VV**	**DDU**	**N**	**NR**	1.3	0.95	63.7	0.25	0.3	67.8	0.85	52	52.5	63	0.3	68.5	1.8	0.050
	72	12	0.6	14 500	11 700	1 480	1 200	16.1	9 000	5 300	11 000	**6910**	**ZZ**	**VV**	**DDU**	**N**	**NR**	1.7	0.95	70.7	0.25	0.5	74.8	0.85	54	55	68	0.6	76	2.3	0.135
	80	10	0.6	15 400	12 400	1 570	1 260	16.1	8 500	—	10 000	**16010**	—	—	—	—	—	—	—	—	—	—	—	—	54	—	76	0.6	—	—	0.175
	80	16	1	21 800	16 600	2 220	1 700	15.6	8 500	4 800	10 000	**6010**	**ZZ**	**VV**	**DDU**	**N**	**NR**	2.49	1.9	76.81	0.6	0.5	86.6	1.7	55	58.5	75	1	88	3.8	0.261
	90	20	1.1	35 000	23 200	3 600	2 370	14.4	7 100	4 800	8 500	**6210**	**ZZ**	**VV**	**DDU**	**N**	**NR**	3.28	2.7	86.79	0.6	0.5	96.5	2.46	56.5	60	83.5	1	98	5.4	0.459
	110	27	2	62 000	38 500	6 300	3 900	13.2	6 000	4 300	7 500	**6310**	**ZZ**	**VV**	**DDU**	**N**	**NR**	3.28	2.7	106.81	0.6	0.5	116.6	2.46	59	68	101	2	118	5.4	1.06
55	72	9	0.3	8 800	8 500	900	865	17.0	8 500	4 800	10 000	**6811**	**ZZ**	**VV**	**DDU**	**N**	**NR**	1.7	0.95	70.7	0.25	0.3	74.8	0.85	57	59	70	0.3	76	2.3	0.081
	80	13	1	16 000	13 300	1 630	1 350	16.2	8 000	4 500	9 500	**6911**	**ZZ**	**VV**	**DDU**	**N**	**NR**	2.1	1.3	77.9	0.4	0.5	84.4	1.12	60	61.5	75	1	86	2.9	0.189
	90	11	0.6	19 400	16 300	1 980	1 660	16.2	7 500	—	9 000	**16011**	—	—	—	—	—	—	—	—	—	—	—	—	59	—	86	0.6	—	—	0.257
	90	18	1.1	28 300	21 200	2 880	2 170	15.3	7 500	4 500	9 000	**6011**	**ZZ**	**VV**	**DDU**	**N**	**NR**	2.87	2.7	86.79	0.6	0.5	96.5	2.46	61.5	64	83.5	1	98	5	0.381
	100	21	1.5	43 500	29 300	4 450	2 980	14.3	6 300	4 300	7 500	**6211**	**ZZ**	**VV**	**DDU**	**N**	**NR**	3.28	2.7	96.8	0.6	0.5	106.5	2.46	63	66.5	92	1.5	108	5.4	0.619
	120	29	2	71 500	44 500	7 300	4 550	13.1	5 600	4 000	6 700	**6311**	**ZZ**	**VV**	**DDU**	**N**	**NR**	4.06	3.1	115.21	0.6	0.5	129.7	2.82	64	72.5	111	2	131.5	6.5	1.37
60	78	10	0.3	11 500	10 900	1 170	1 120	16.9	8 000	4 500	9 500	**6812**	**ZZ**	**VV**	**DD**	**N**	**NR**	1.7	1.3	76.2	0.4	0.3	82.7	1.12	62	64	76	0.3	84	2.5	0.103
	85	13	1	19 400	16 300	1 980	1 660	16.2	7 500	4 300	9 000	**6912**	**ZZ**	**VV**	**DDU**	**N**	**NR**	2.1	1.3	82.9	0.4	0.5	89.4	1.12	65	66	80	1	91	2.9	0.192
	95	11	0.6	20 000	17 500	2 040	1 780	16.3	7 100	—	8 500	**16012**	—	—	—	—	—	—	—	—	—	—	—	—	64	—	91	0.6	—	—	0.281
	95	18	1.1	29 500	23 200	3 000	2 370	15.6	7 100	4 000	8 500	**6012**	**ZZ**	**VV**	**DDU**	**N**	**NR**	2.87	2.7	91.82	0.6	0.5	101.6	2.46	66.5	69	88.5	1	103	5	0.412
	110	22	1.5	52 500	36 000	5 350	3 700	14.3	5 600	3 800	7 100	**6212**	**ZZ**	**VV**	**DDU**	**N**	**NR**	3.28	2.7	106.81	0.6	0.5	116.6	2.46	68	74.5	102	1.5	118	5.4	0.783
	130	31	2.1	82 000	52 000	8 350	5 300	13.1	5 300	3 600	6 300	**6312**	**ZZ**	**VV**	**DDU**	**N**	**NR**	4.06	3.1	125.22	0.6	0.5	139.7	2.82	71	79	119	2	141.5	6.5	1.72
65	85	10	0.6	11 900	12 100	1 220	1 230	17.0	7 500	4 000	8 500	**6813**	**ZZ**	**VV**	**DD**	**N**	**NR**	1.7	1.3	82.9	0.4	0.5	89.4	1.12	69	69	81	0.6	91	2.5	0.128
	90	13	1	17 400	16 100	1 770	1 640	16.6	7 100	4 000	8 500	**6913**	**ZZ**	**VV**	**DDU**	**N**	**NR**	2.1	1.3	87.9	0.4	0.5	94.4	1.12	70	71.5	85	1	96	2.9	0.218
	100	11	0.6	20 500	18 700	2 090	1 910	16.5	6 700	—	8 000	**16013**	—	—	—	—	—	—	—	—	—	—	—	—	69	—	96	0.6	—	—	0.30
	100	18	1.1	30 500	25 200	3 100	2 570	15.8	6 700	4 000	8 000	**6013**	**ZZ**	**VV**	**DDU**	**N**	**NR**	2.87	2.7	96.8	0.6	0.5	106.5	2.46	71.5	73	93.5	1	108	5	0.439
	120	23	1.5	57 500	40 000	5 850	4 100	14.4	5 300	3 600	6 300	**6213**	**ZZ**	**VV**	**DDU**	**N**	**NR**	4.06	3.1	115.21	0.6	0.5	129.7	2.82	73	80	112	1.5	131.5	6.5	1.0
	140	33	2.1	92 500	60 000	9 450	6 100	13.2	4 800	3 400	6 000	**6313**	**ZZ**	**VV**	**DDU**	**N**	**NR**	4.9	3.1	135.23	0.6	0.5	149.7	2.82	76	85.5	129	2	152	7.3	2.11
70	90	10	0.6	12 100	12 700	1 230	1 300	17.2	6 700	3 800	8 000	**6814**	**ZZ**	**VV**	**DD**	**N**	**NR**	1.7	1.3	87.9	0.4	0.5	94.4	1.12	74	74.5	86	0.6	96	2.5	0.134
	100	16	1	23 700	21 200	2 420	2 160	16.3	6 300	3 600	7 500	**6914**	**ZZ**	**VV**	**DDU**	**N**	**NR**	2.5	1.3	97.9	0.4	0.5	104.4	1.12	75	77.5	95	1	106	3.3	0.349
	110	13	0.6	26 800	23 600	2 730	2 410	16.3	6 000	—	7 100	**16014**	—	—	—	—	—	—	—	—	—	—	—	—	74	—	106	0.6	—	—	0.441
	110	20	1.1	38 000	31 000	3 900	3 150	15.6	6 000	3 600	7 100	**6014**	**ZZ**	**VV**	**DDU**	**N**	**NR**	2.87	2.7	106.81	0.6	0.5	116.6	2.46	76.5	80.5	103.5	1	118	5	0.608
	125	24	1.5	62 000	44 000	6 350	4 500	14.5	5 000	3 400	6 300	**6214**	**ZZ**	**VV**	**DDU**	**N**	**NR**	4.06	3.1	120.22	0.6	0.5	134.7	2.82	78	84	117	1.5	136.5	6.5	1.09
	150	35	2.1	104 000	68 000	10 600	6 950	13.2	4 500	3 200	5 300	**6314**	**ZZ**	**VV**	**DDU**	**N**	**NR**	4.9	3.1	145.24	0.6	0.5	159.7	2.82	81	92	139	2	162	7.3	2.57
75	95	10	0.6	12 500	13 900	1 280	1 410	17.3	6 300	3 600	7 500	**6815**	**ZZ**	**VV**	**DDU**	**N**	**NR**	1.7	1.3	92.9	0.4	0.5	99.4	1.12	79	79.5	91	0.6	101	2.5	0.149
	105	16	1	24 400	22 600	2 480	2 300	16.5	6 000	3 400	7 100	**6915**	**ZZ**	**VV**	**DDU**	**N**	**NR**	2.5	1.3	102.6	0.4	0.5	110.7	1.12	80	82	100	1	112	3.3	0.364
	115	13	0.6	27 600	25 300	2 820	2 580	16.4	5 600	—	6 700	**16015**	—	—	—	—	—	—	—	—	—	—	—	—	79	—	111	0.6	—	—	0.463
	115	20	1.1	39 500	33 500	4 050	3 400	15.8	5 600	3 400	6 700	**6015**	**ZZ**	**VV**	**DDU**	**N**	**NR**	2.87	2.7	111.81	0.6	0.5	121.6	2.46	81.5	85.5	108.5	1	123	5	0.649
	130	25	1.5	66 000	49 500	6 750	5 050	14.7	4 800	3 200	5 600	**6215**	**ZZ**	**VV**	**DDU**	**N**	**NR**	4.06	3.1	125.22	0.6	0.5	139.7	2.82	83	90	122	1.5	141.5	6.5	1.19
	160	37	2.1	113 000	77 000	11 600	7 850	13.2	4 300	2 800	5 000	**6315**	**ZZ**	**VV**	**DDU**	**N**	**NR**	4.9	3.1	155.22	0.6	0.5	169.7	2.82	86	98.5	149	2	172	7.3	3.08

Notes (1) For tolerances for the snap ring grooves and snap ring dimensions, refer to Pages **A50** to **A53**.
(2) When heavy axial loads are applied, increase d_a and decrease D_a from the above values.

Remarks 1. Diameter Series 7 (extra thin section bearings) are also available, please contact NSK.
2. When using bearings with rotating outer rings, contact NSK if they are sealed, shielded, or have snap rings.