REV.	ECN NO.	DATE	SIGN	DESCRIPTION
B	LE31110015~019	2011/01/05	Vicky	Mini Size Molding外觀變更
C	LEN1640365~370	2016/04/13	Ruru	Change Logo

ALTW CONFIDENTIAL 2016.04.13 R&D DEPT.

ALTW DCC. DEPT. CONFIDENTIAL 2016.05.04 ISSUED

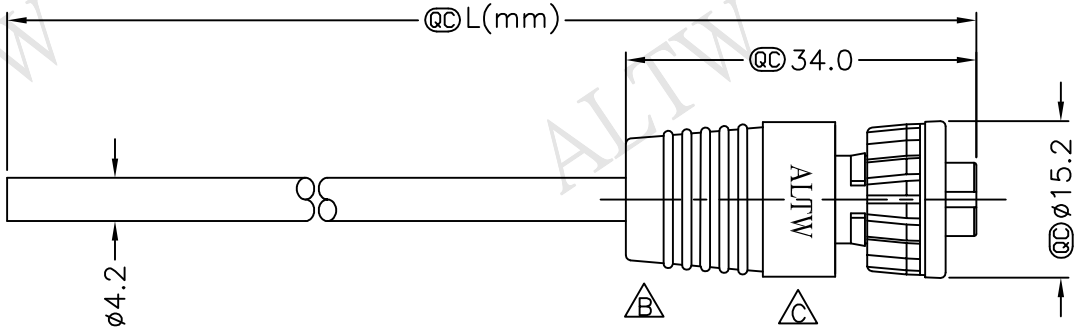

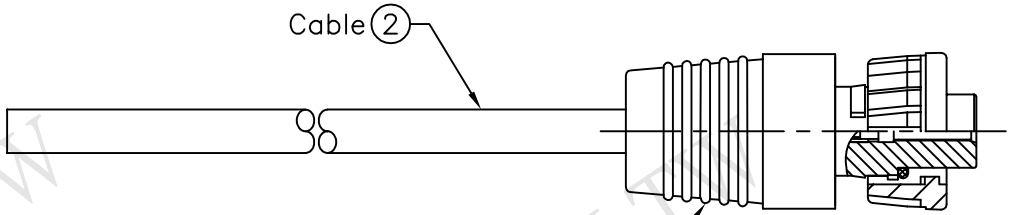

AD-02BFFM-LL7000
Color:Black

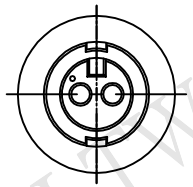

Conn.

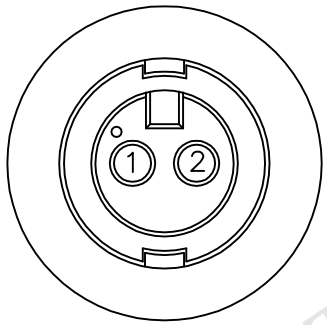

Pin Assignments
Front View

Conn.	Wire Color	
2	Red	紅
1	Black	黑
Pin Out		

B AD-02BFFM-LL7AXX

XX:01~99Meter
01:01Meter
02:02Meters
⋮
99:99Meters
Cable Length(L):01~99Meters

Note:
* QC Important Dimension.
* Waterproof Rate: IP67.
* Connector: Nylon+GF, Black.
* Female Pin: Copper Alloy, Gold Plated.
* Lock Nut: Nylon+GF, Black.
* O-Ring: EPDM, Black.
* Cable: UL2464 24AWG*2C+D+A, PVC Jacket, UV Resistant, OD=4.2mm, Black
B * Cable Length Tolerance:01M:±40mm
02M~05M:±60mm
06M~10M:±100mm
11M~30M:±200mm
31M~99M:±500mm

UNIT:mm	TITLE: Mini,Cable Lock 2P F Conn F Pin	Amphenol LTW 安費諾亮泰企業股份有限公司	ITEM NO	DRAWN BY: Ruru	DATE: 2016/04/13
TOLERANCE: ±0.5 mm	SCALE: Free / SHEET 1 OF 1		DWG NO: AD-02BFFM-LL7AXX	CHECKED BY: Rita	DATE: 2016/04/13
	REV. C / SIZE A4	QC :Inspection Item	CUSTOMER: ALTW	APPROVED BY: Lisa	DATE: 2016/04/13

THIS DOCUMENT IS SUBJECT TO CHANGE WITHOUT NOTICE. IT IS CONFIDENTIAL AND A PROPERTY OF Amphenol LTW. DISCLOSURE TO THIRD PARTY HAS TO BE AUTHORIZED BY Amphenol LTW.