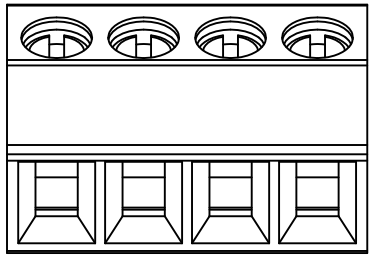

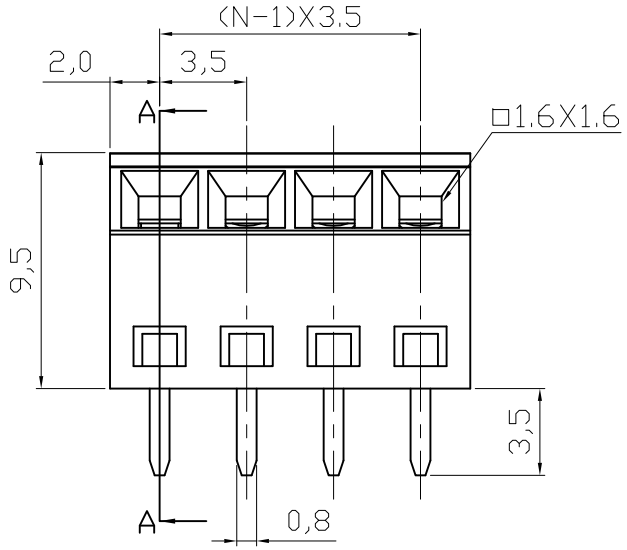

N=Number of contacts

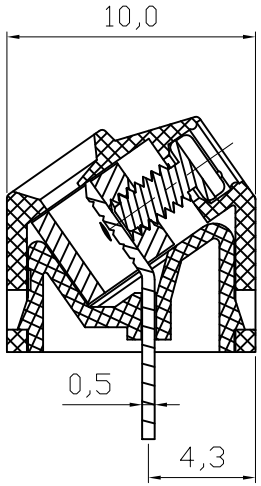

SECTION A-A

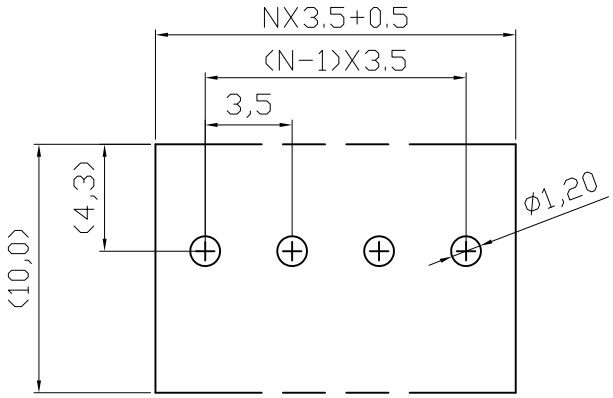

P.C,B LAYOUT

Material

Terminal body
(metal housing): Brass(CuZn)
Terminal screw: Steel Zinc plating "-" slot type
Contacts: Brass
Surface of solder tail: Tin plated
Insulator (housing): Thermoplastic (UL94V-0),Green

Electrical cULus

Voltage rating: 300VAC
Current rating: 10A
Wire range:
Solid wire(AWG): 16-28
Stranded wire(AWG): 16-28
Torque(Lb-In): 1.7
Screw: M2
Wire strip length: 6-7mm
Withstanding Voltage: 1.6KV
Operating temperature: -40°C to +115°C
Soldering temperature: 250°C±10°C/5 Sec
Safety Approval: c us

RoHS compliant

Scale	1:1						Date	Name
TOLERANCE						Drawn	08.09.2009	Rale
X.	±0.50					Approved	08.09.2009	Hellwig
X.X	±0.30							
X.XX	±0.10							
DIM	TOL							
X.°	±1°							
X.X°	±X°	①	Drawn	08.09.2009	Rale			
Angle	TOL	Id.	Modification	Date	Name			

Customer-No.

ASSMANN WSW-No.
A-TB350-TVxxSB

Drawing-No.
ASS 3710 CO

rev01

Replace

Sheet

ASSMANN WSW components

SV1635-1