FIBOX QUICK CAB PCQ 604027 T

Sample photo

Order symbol:	CAB PCQ 604027 T	**EAN:**	6418074011138
Product nbr:	8113178	**El. number:**	
		Finland	3421932
Description:	Cabinet, PC	Italy	7682065D
Remarks:	Smoked transparent cover	Sweden	2540111

Including: Base with screws for mounting plate/DIN-rail, internal corner plugs, cover with PUR gasket and CS 12137 cover screws.

Dimensions:	**L**	**W**	**H**
mm:	600	400	270
inch:	23.6	15.7	10.6

Materials:

Material:	PC
Base colour:	RAL 7035
Cover colour:	Smoked grey
Cover screws material:	Polyamide
Cover screws colour:	RAL 5023
Gasket material:	Polyurethane

Temperatures:

Short term:	-40 … 120 °C
Continuous:	-40 … 80 °C
Short term:	-40 … 250 °F
Continuous:	-40 … 175 °F

Accessories:

EKIV 64H	Mounting plate
EKIV 37	DIN-35 Mounting rail
FP A 64	Swing-out door, aluminium
FP 18x3-64	Front Plate
DRF 63/64	DIN rail frame set

Rating:

Ingress Protection (EN 60529): IP 66/67
Impact Resistance (EN 50102): IK 08
Electrical insulation: Totally insulated
Halogen free (DIN/VDE 0472, Part 815): Yes
UV resistance: UL 508
Flammability Rating (UL 746 C 5): UL 94 5V
Glow Wire Test (IEC 695-2-1) °C: 960
NEMA Class: NEMA 1, 4, 4X, 12, 13

Certificates:

Germanischer Lloyd (GL)
Underwriters Laboratories
Fimko
Lloyds Register of Shipping (LR)
Europe EN 50298 1998
UL Canada
Gost R

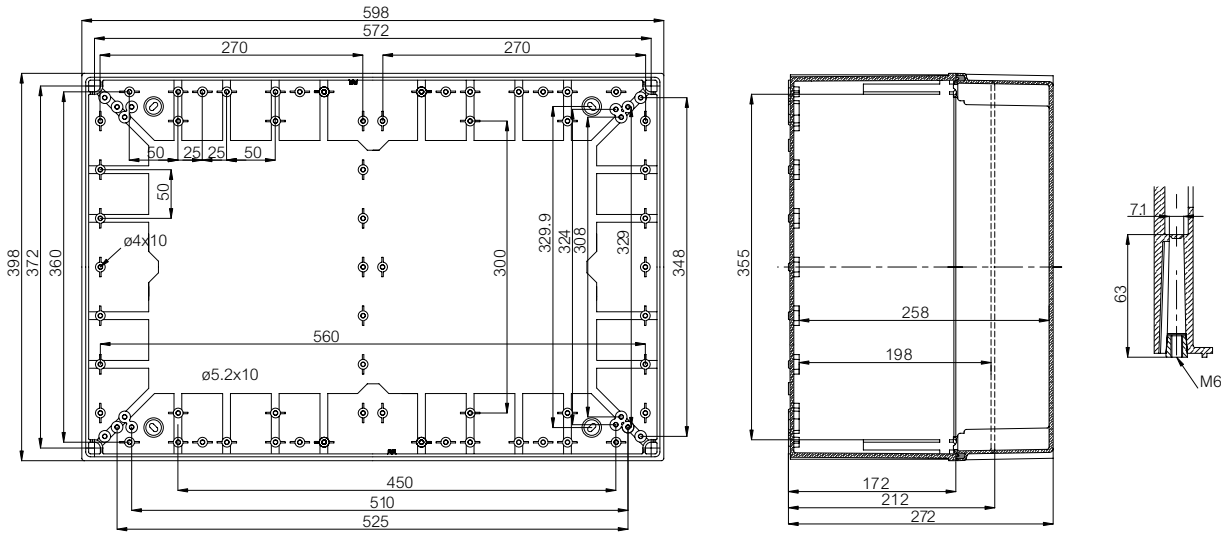

(c) Fibox OY, Data subject to change without notice