ISO 9001
FM 63475

EDAC GROUP

RoHS COMPLIANT

A world class manufacturer of high quality electronic connectors
with offices in

Canada
United States
England
Taiwan
China

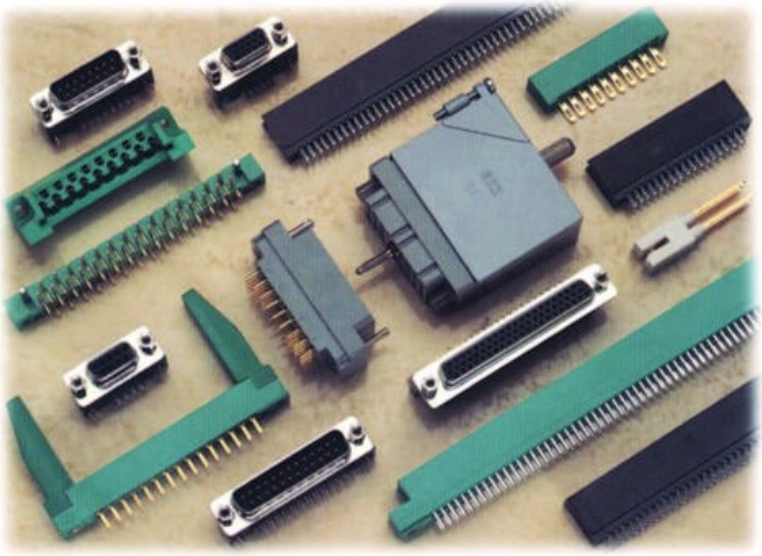

EDAC components are available through a worldwide network of
Distributors and Manufacturers Representatives

For the contact name and number of an EDAC representative in your area
please refer to our web site at

http://www.edac.net

Our policy is to ship error free parts, on time at competitive price

Downloaded from Elcodis.com electronic components distributor

EDAC GROUP

NUMERICAL INDEX

TABLE OF CONTENTS

Your Connection to Quality and Service

Downloaded from Elcodis.com electronic components distributor

Edac connectors are used around the world in a wide variety of applications. The Edac product line includes a broad range of card edge connectors together with rack & panel and metal to metal interconnect systems, application tooling and card guide components.

INDUSTRIES SERVICED BY EDAC

- Computer (mainframes, personal, terminals and peripheral equipment)
- Broadcast & Motion Picture (studio equipment, interconnect cabling)
- Consumer Electronics (video and arcade games, interactive toys)
- Military Electronics (weapons systems)
- Aviation Electronics (ground based radar, test equipment)
- Telecommunications (central office, PBX and electronic key systems)
- Industrial Electronics (controllers, monitoring systems)
- Test Equipment (general and special purpose instruments and systems)
- Traffic Control (highway safety and monitoring systems)

CARD EDGE CONNECTORS

The most common application for card edge connectors involves the use of printed circuit daughter boards. The connectors are frequently mounted within an enclosure and interconnnected using either a printed circuit mother board (backplane), wire wrap technology or hand wiring.

Edac supplies connectors in a variety of row spacings and contact pitches suitable for motherboard and wire wrap applications. The backplane connectors are available in either solder dip or compliant (non-solder press fit) configurations.

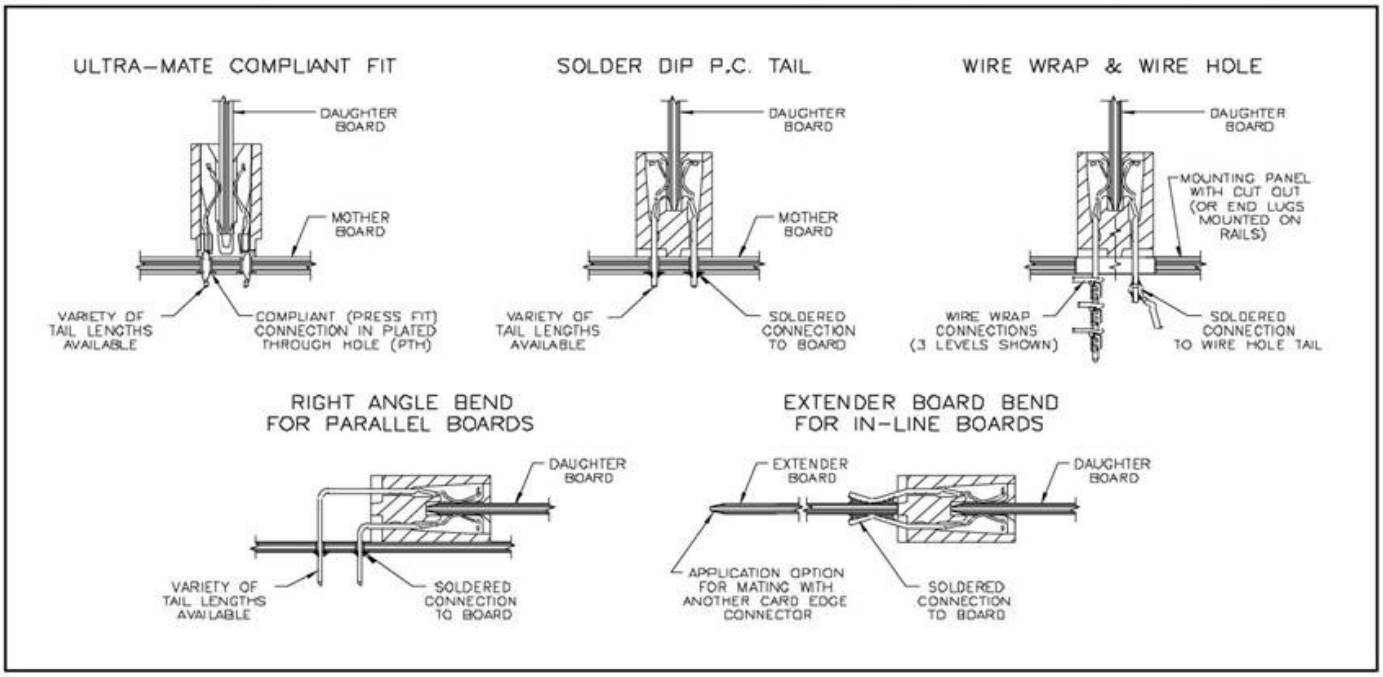

Edac connectors can be designed into many of the industry standard bus systems. For your convenience, the following chart may be used as a guide.

BUS SYSTEM	CONNECTOR SPECIFICATION	EDAC SERIES	BUS SYSTEM	CONNECTOR SPECIFICATION	EDAC SERIES
APPLEBUS	2 x 25 Pin, .100" (2.54mm) Spacing	345, 50 Pin	MOTOROLA EXERCISOR	2 x 43 Pin, .156" (3.96mm) Spacing	337, 86 Pin
EISA	2 x 94 Pin, .050" (1.27mm) Spacing	301, 188 Pin	MULTIBUS 1	2 x 43 Pin, .156" (3.96mm) Spacing	337, 86 Pin
IBM PC-XT	2 x 31 Pin, .100" (2.54mm) Spacing	345, 62 Pin		2 x 30 Pin, .100" (2.54mm) Spacing	345, 60 Pin
IBM PC-AT(ISA)	2 x 49 Pin, .100" (2.54mm) Spacing	395, 98 Pin	STANDARD BUS	2 x 28 Pin, .125" (3.18mm) Spacing	346, 56 Pin
IBM MICROCHANNEL	2 x 56 Pin, .050" (1.27mm) Spacing	302, 112 Pin	S100	2 x 50 Pin, .125" (3.18mm) Spacing	346,100 Pin
	2 x 66 Pin, .050" (1.27mm) Spacing	302, 132 Pin	VERSABUS	2 x 70 Pin, .100" (2.54mm) Spacing	345,140 Pin
	2 x 91 Pin, .050" (1.27mm) Spacing	302, 182 Pin		2 x 60 Pin, .100" (2.54mm) Spacing	345,120 Pin

Downloaded from Elcodis.com electronic components distributor

CONNECTOR APPLICATIONS

METAL TO METAL AND RACK & PANEL CONNECTORS

When ultra reliable interconnections are required, use of our metal to metal contact system is suggested. Either standard sized connectors can be specified, or a customer's own contact pattern can be accomodated using individual components mounted directly to the printed circuit board. The principle of the Edacon metal to metal contact is shown below.

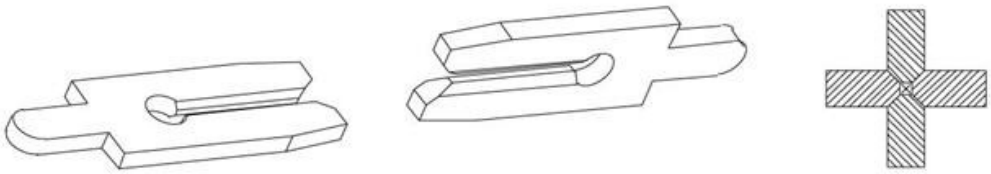

Edacon Hermaphroditic Contact Design with Four Contact Mating Surfaces

Typical arrangements for metal to metal interconnect systems.

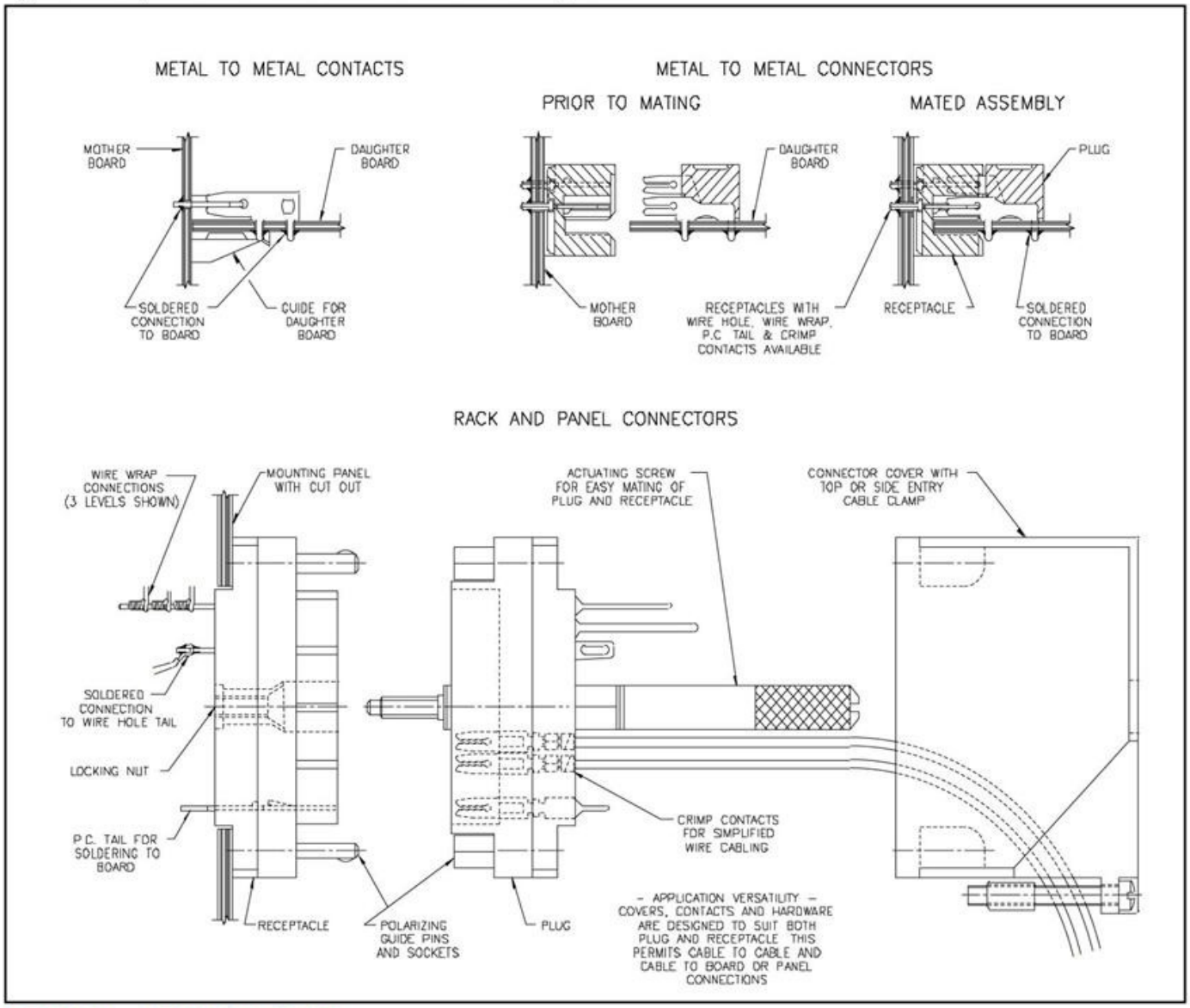

SPECIAL APPLICATIONS

Edac specializes in providing many customized connectors for both small and large orders. If you need a special card slot, body width, card guide, contact tail, mounting option, etc. then call the factory for a quotation. Our tooling system allows us to manufacture many non-standard options at a low cost.

Downloaded from Elcodis.com electronic components distributor

ENGINEERING NOTES

Plastic Moulding Materials

Edac offers a wide range of insulator materials including polyester, diallyl phthalate, polyphenylene sulphide, polycarbonate and nylon. Card guides are moulded in polyester or polycarbonate and polarizing keys are moulded in nylon. If a specific material is required to suit your application, please consult with Edac.

All of the moulding materials used by Edac have excellent mechanical, electrical and thermal properties. Some of the notable differences between the material characteristics are as follows:

1) Diallyl phthalate is a thermoset material. All other materials used are thermoplastics.

2) Polyphenylene sulphide and diallyl phthalate are capable of being used in vapour phase or infra-red soldering applications up to 260 degc. Frequently these materials are also used in burn-in applications up to 150 degrees Celsius.

3) In general, chemical resistance is excellent for all of the materials, except polycarbonate. With polycarbonate, chemicals such as amines, aromatic or halogenated hydrocarbons, esters and ketones should be avoided.

4) The flammability rating is UL 94V-0 for all materials, except for polycarbonate which is rated at UL 94V-2 and nylon which is rated at UL 94HB.

Contact Materials

Contact base materials are either phosphor bronze alloy CA-510 or copper, nickel, tin alloy CA-725. These materials have been widely used and accepted in the electronics industry for many years. They offer an excellent blend of electrical, mechanical and corrosion resistance characteristics at a reasonable cost.

Phosphor bronze alloy CA-510, (Federal Specification QQ-B-750, Grade A) consists of 94.8% copper, 5% tin and 0.2% phosphorus.

Copper, nickel, tin alloy CA-725, (ASTM B-122, Copper Alloy UNS No. C72500) consists of 88.2% copper, 9.5% nickel and 2.3% tin. This material has the added benefit of remaining solderable in the unplated condition for an extended period of time.

Contact Finish (Plating & Gold Inlay)

The standard contact finishes offered include:

1) Selective plating - nickel overall followed by gold on the contact mating area and tin alloy on the contact tails

2) Overall plating - gold over nickel or tin alloy

3) Gold alloy inlay - Western Electric alloy #1 (69% gold, 25% silver and 6% palladium) over nickel on the mating area and unplated CA-725 tails

With this manufacturing flexibility, Edac can also provide contact finishes to meet specific requirements. Examples of special platings regularly performed include various plating thicknesses and selectively plated gold on both the mating area and the contact tail.

Metal Hardware Materials

The majority of metal hardware such as threaded inserts, bushings and actuating screws are nickel plated brass or steel. Consult with Edac if specific details are required.

Underwriters Laboratories (UL) and Canadian Standards Association (CSA)

Connectors recognized by UL and certified by CSA (as indicated on the individual series pages) are listed under UL File No. E62838 & E215269 and CSA File No. LR 39927. Consult with Edac if additional product listings are required.

Wire Data

Diameters of wire sizes commonly used with Edac connectors are summarized below. The actual stranded wire diameter is dependant upon the number of strands and individual strand gauge.

Gauge AWG	Diameter of Solid Wire Conductor	Diameter of Stranded Wire Conductor
18	.0403 (1.024)	.047 to .049 (1.19 to 1.24)
20	.0320 (0.813)	.035 to .038 (0.89 to 0.97)
22	.0253 (0.643)	.030 to .031 (0.76 to 0.79)
24	.0201 (0.511)	.023 to .024 (0.58 to 0.61)
26	.0159 (0.404)	.019 to .021 (0.48 to 0.53)
28	.0126 (0.320)	.015 to .016 (0.38 to 0.41)
30	.0100 (0.254)	.012 (0.30)

The insulation diameter will vary depending upon the application, rating and material.

Downloaded from Elcodis.com electronic components distributor

ENGINEERING & GENERAL NOTES

ENGINEERING NOTES

Special Variation Connectors

Over the past 40 years, Edac has manufactured a wide selection of special connectors. In the part numbering system, they are identified as special by the last group of digits in the part number.

Example Part Number 345 - 072 - 520 - 3 05

Special Variation Identification Code
No. 3 - for Series 100 to 438
No. 9 - for Series 516 to 746

Unique Listing Code for Special Connector
This number is assigned by Edac. Note that connector part number 345-060-520-305 may have completely different features than the part number in the example above.

Some examples of special connector features previously used in manufacturing include:

- Special contact assembly patterns
- Polarizing key installed or moulded into position
- Cost saving options such as no part marking
- Material and plating options
- Special insulator dimensions (length, width, height, mounting)
- Insulator features such as open card slot ends
- Special contact bends, board lock forms, tail lengths
- Customer part number marking
- Specific quality requirements or testing
- Specific control on insertion and withdrawal forces
- Mounting features such as side holes through card guides
- Special rack & panel polarization or cover designs

If you have any unique or unusual connector requirements, discuss them with the specialists at Edac, where even the strangest design ideas can become reality.

Environmental Responsibility

Edac's products and manufacturing processes are free of ozone depleting substances (CFC's and HCFC's) as listed by the Environmental Protection Agency. In addition, waste water quality management and 3R (reduce, re-use and recycle) programs form part of the Edac commitment to environmental responsibility.

GENERAL NOTES

1) Unless indicated otherwise, all dimensions are in inches with the millimeter equivalent in parenthesis, for example .125 (3.18).

2) Some helpful unit conversion factors are as follows:
   1.000 inch = 25.40 millimeters
   .000001 inch = 1 microinch = 0.0254 microns
   16 ounces force = 1 pound force = 4.448 Newtons

3) Dimensional drawings are presented using orthographic third angle projection.

4) Abbreviations used in this catalogue are summarized below:

AWG	- American Wire Gauge
C	- Celcius
CSA	- Canadian Standards Association
Dia.	- Diameter
EISA	- Extended Industry Standard Architecture
I.D.	- Inside Diameter
ISA	- Industry Standard Architecture
kN	- kilonewton
kPa	- kilopascal
lbs	- pounds
MCA	- Microchannel Architecture
mm	- millimeters
N	- newton
oz.	- ounce
P.C.	- Printed Circuit
P/N	- Part Number
psi	- pounds per square inch
rms	- root mean squared
V AC	- Volts, Alternating Current
UL	- Underwriters Laboratories

5) Registered trademarks to be acknowledged include:
   Ultra-Mate - Edac Inc.
   Wire Wrap - Gardner Denver Corp.

6) Edac is a licensed user of the connector design technology that permits the use of flat rock tooling for the installation of the compliant pin card edge connectors.

7) Every effort has been made to ensure the accuracy of information within this catalogue. When changes or corrections are necessary, trade announcements are made to customers, distributors or representatives of Edac. Readers of this catalogue are invited to offer suggestions for improvements to future publications.

Downloaded from Elcodis.com electronic components distributor

Ultra-Mate®

SECTION THROUGH COMPLIANT PORTION OF CONTACT

Contact Inserted into a Plated Through Circuit Board Hole Conformity to the Hole Eliminates Hole Damage

- Contact Spacings of .100 (2.54), .125 (3.18) and .156 (3.96)
- Full Range of Connector Sizes - Up to 150 Contacts
- Variety of Contact Tail Lengths and Contact Point Styles
- Make-Before-Break Switching Contacts also Available
- Simple Flat Rock Tooling for Connector Installation
- Unique Compliant Pin Design offers Low Installation Force, Symmetrical Internal Force Distribution, a Large Uniform Compliant Surface Area and will Cause No Damage to the Circuit Board Holes

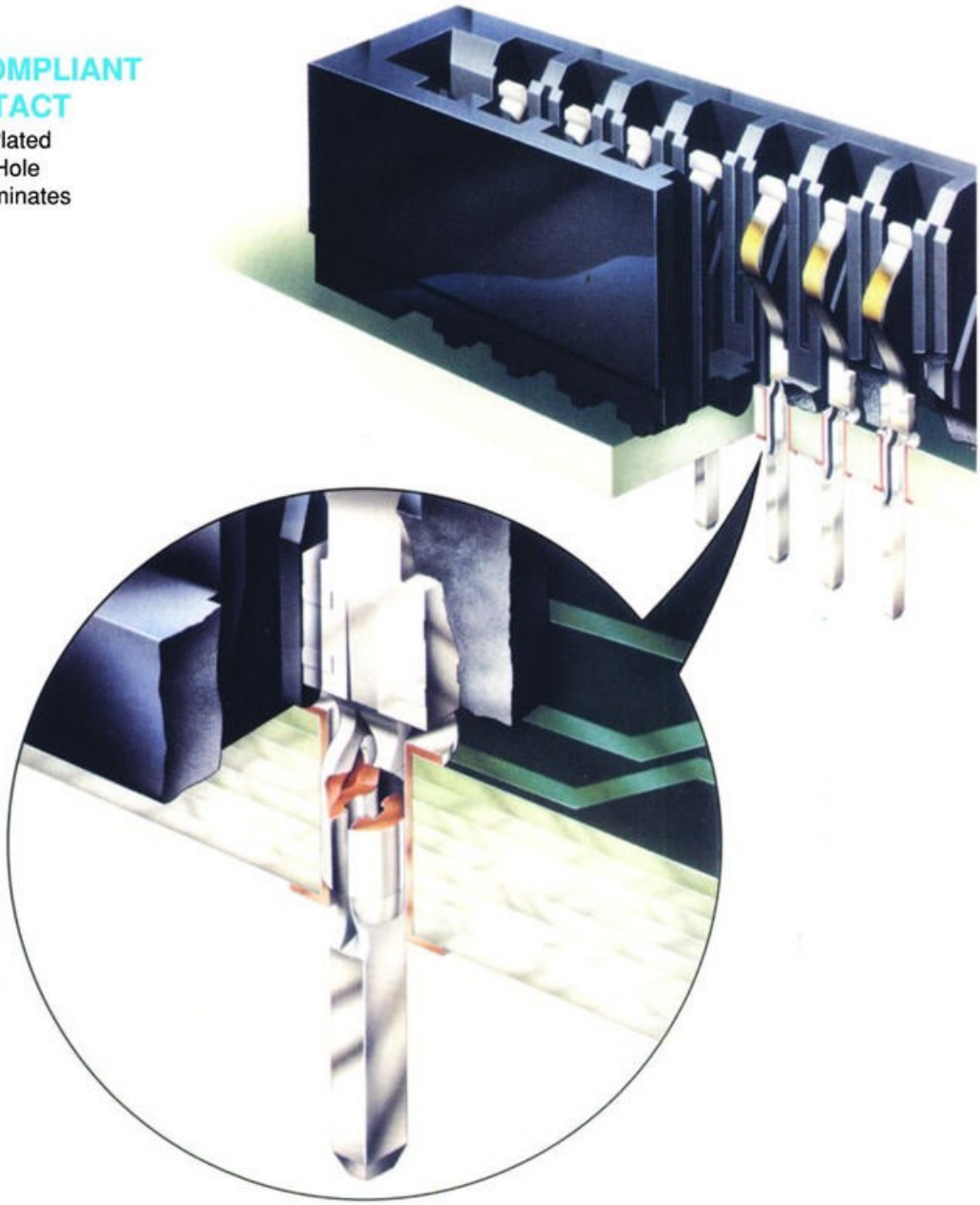

Downloaded from Elcodis.com electronic components distributor

CONNECTOR INSTALLATION

Connectors received by the customer are ready for installation into the circuit board. The flat rock insertion technique requires a press and adequate support for the circuit board. Once the number of contacts to be pressed into the board together has been determined, the press tonnage should be calculated at approximately 30 pounds (134 N) per contact. The support plate should be designed with clearance where the contact tails protrude through the underside of the board.

INSULATOR REMOVAL TOOL

- Part Number 745-280-200 for Use with 737 and 745 Series Connectors
- Part Number 746-280-200 for Use with 746 Series Connectors
- Tool Latches under Side Steps of Insulator and Lifts Insulator while Leaving Contacts Firmly Positioned in the Circuit Board

CONTACT REMOVAL TOOL

- Part Number 745-280-300 for Contact Codes 520 and 525
- Part Number 345-280-200 for All Other Contact Codes
- Used for 737, 745 and 746 Series
- Removes a Contact from the Circuit Board after the Insulator has been Removed

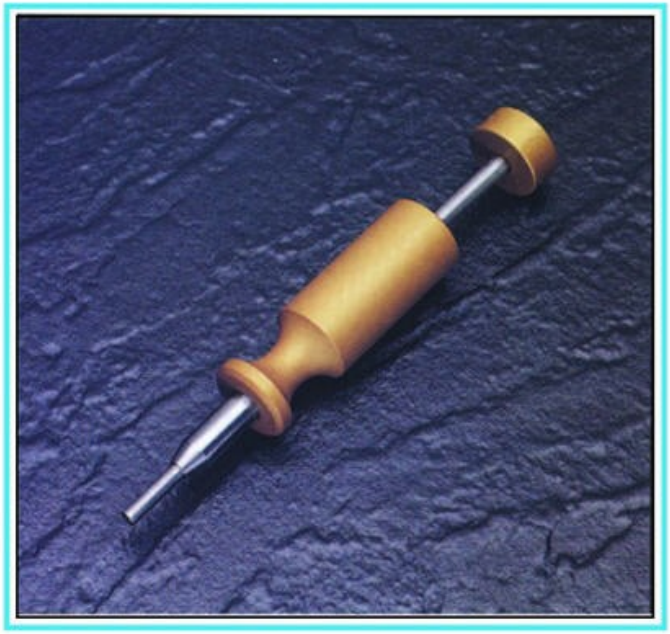

CONTACT REMOVAL OR REPLACEMENT PROCEDURE

Using the insulator removal tool, lift the insulator up to remove it from the contacts. The contacts will be left standing firmly on the circuit board. Remove any contacts necessary. If replacement contacts are needed, assemble contacts into the appropriate positions in the insulator and push them in lightly so that they will stay in position during re-assembly. Align the insulator with the contacts in the board and push it down until the new contacts are positioned over their holes. Using the flat rock installation technique, push the insulator and new contacts down into their final position.

Downloaded from Elcodis.com electronic components distributor

745 SERIES ULTRA-MATE CARD EDGE CONNECTOR

.100" (2.54mm) Contact Spacing, Compliant Pin

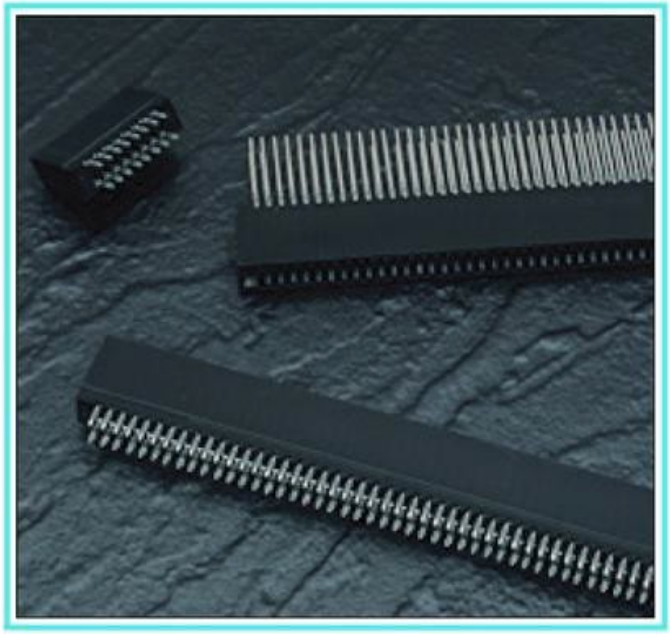

745 SERIES ORDERING CODE

Example Part Number 745 - 100 - 520 - 2 06

- **Series** — 745
- **Total Number of Contacts** — 100
- **Contact Code** — 520
- **Contact Rows** — 2
- **Insulator Options** — 06

Series 745

Total Number of Contacts [1]	Contact Rows
005, 006,...075	Single Row
010, 012,...150	Dual Row

Contact Code [2]	Description & Contact Point	Tail Length "G"
520	P.C. Tail Regular Point	.175 (4.45)
522	P.C. Tail Regular Point	.375 (9.53)
525	P.C. Tail High Point	.175 (4.45)
540	Wire Wrap Regular Point	.560 (14.22)
541	Wire Wrap Regular Point	.750 (19.05)
545	Wire Wrap High Point	.560 (14.22)

Contact Rows	Description
1	Single Row
2	Dual Row

Insulator Options	Description
01	.645 (16.38) Full Height Ends
06	.550 (13.97) Notched Ends

Ordering Code Notes

1) All connector sizes up to 75 contacts single row / 150 contacts dual row are available upon request.
2) Make-before-break switching contacts, assembled in specific contact positions, are available upon request.

FEATURES

- CSA Approved and UL Recognized
- .100 (2.54) Contact Spacing x .200 (5.08) Row Spacing
- Accepts .062 (1.57) Nominal Thickness P.C. Board
- High Profile Insulator Body, .645 (16.38) with End Notch Option
- Ultra-Mate Compliant Section for Gas-Tight Reliable Connection in Plated Through Holes Eliminates Soldering Operations
- Contact Termination Options include P.C. Tail and .025 (0.64) Square Wire Wrap
- Single or Dual Row Configurations
- Accepts Between Contact and In-Contact Polarizing Keys
- Tools Available for Insulator and Contact Removal. Simple "Flat Rock" Tooling is Used for Connector Installation

SPECIFICATIONS

- Insulator Material: Thermoplastic Polyester, UL 94V-O, Colour: Black
- Contact Material: Copper, Nickel, Tin Alloy CA-725
- Contact Plating: 30 Microinches (0.76 Microns) Gold on the Mating Area, Tin on the Compliant Section and Contact Tails, Nickel Underplate. Other Plating Options Available upon Request.
- Currrent Rating: 2 Amperes Continuous
- Contact Resistance: 10 Milliohms Maximum
- Dielectric Withstanding Voltage: 1200 V AC rms at Sea Level Between Adjacent Contacts
- Insulation Resistance: 5000 Megohms Minimum
- Operating Temperature: -65 to +105 Degrees C
- Daughter Board Insertion Force: 16 oz (4.45 N) Maximum per Contact Pair when Tested with a .070 (1.78) Thick Gauge
- Daughter Board Withdrawal Force: 1 oz (0.28 N) Minimum per Contact Pair when Tested with a .054 (1.37) Thick Gauge
- Contact Insertion Into Hole: 20 lbs (89 N) Maximum
- Contact Retention In Hole: 10 lbs (44 N) Minimum
- Re-Insertability of Hole: 3 Times Minimum

IN-CONTACT POLARIZING KEY

P/N 745-240-328

BETWEEN CONTACT POLARIZING KEY

P/N 306-240-318

Downloaded from Elcodis.com electronic components distributor

ULTRA-MATE CARD EDGE CONNECTOR SERIES 745

Compliant Pin, Contact Spacing .100" (2.54mm)

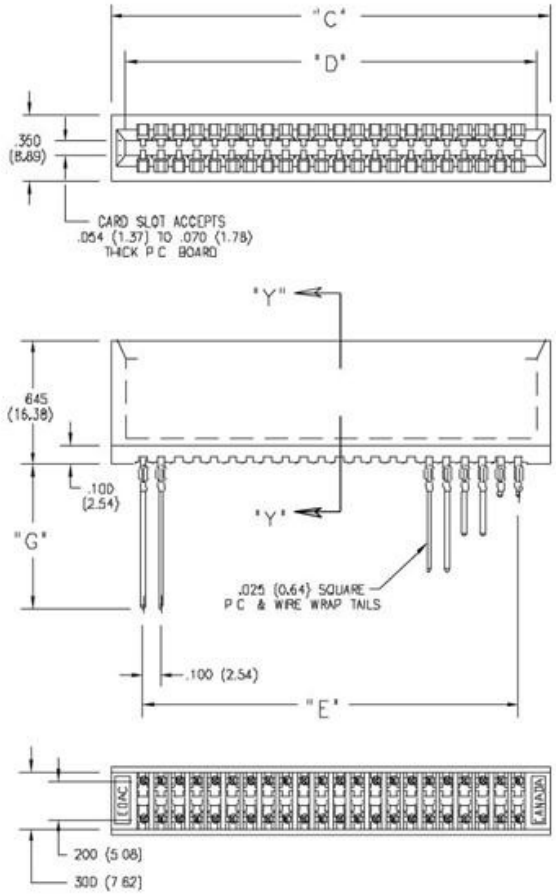

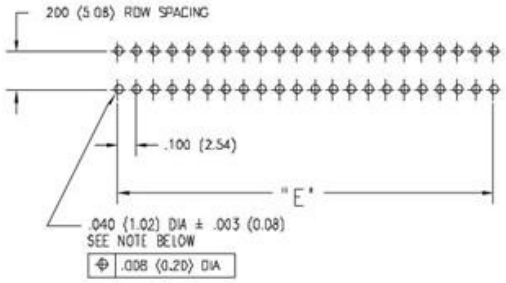

RECOMMENDED MOTHER BOARD HOLE PATTERN

TO OBTAIN OPTIMUM COMPLIANT SECTION PERFORMANCE, DRILL HOLES .0453 ± .001 (1.15 ± 0.03) DIAMETER COPPER PLATE, .001 (25.4 MICRONS) MINIMUM THICKNESS, FOLLOWED BY TIN PLATE TO PROVIDE FINISHED HOLES .040 ± .003 (1.02 ± 0.08) DIAMETER

SECTIONS "Y" – "Y"

CONTACT ROWS & INSULATOR OPTIONS

Single Row Versions May Require Backup Springs Dependent upon the Application. Consult with EDAC for Details.

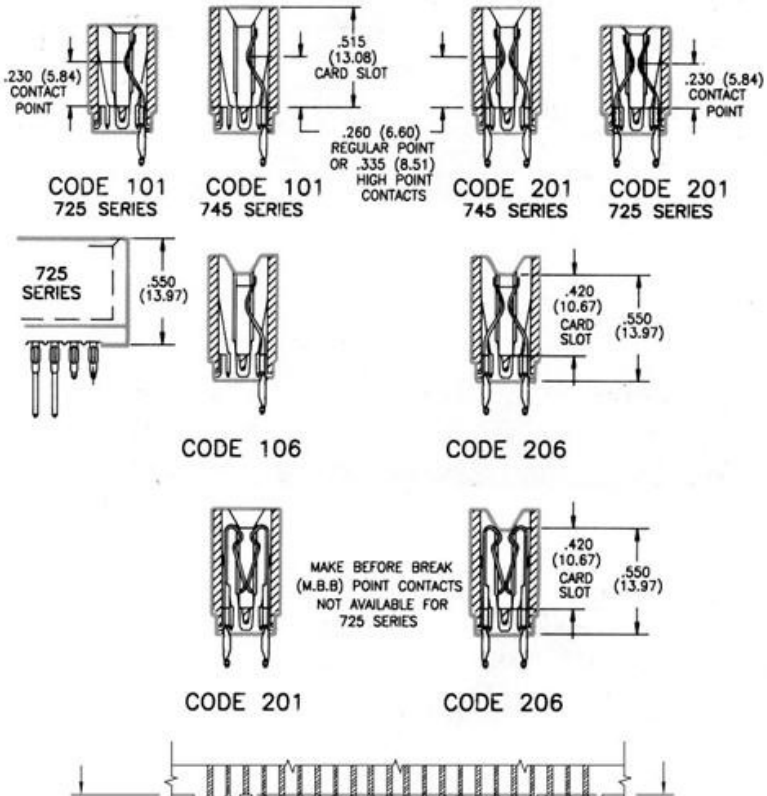

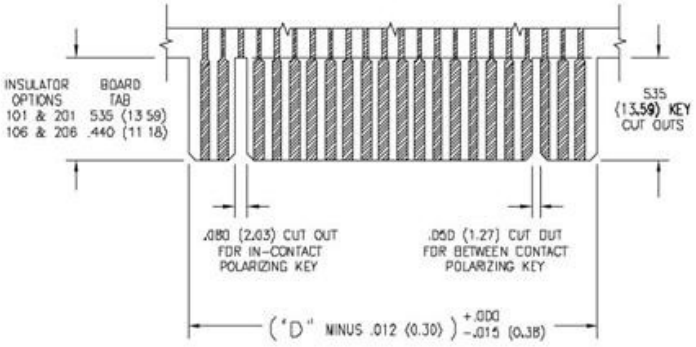

RECOMMENDED DAUGHTER BOARD

NUMBER OF CONTACTS		"C"		"D"		"E"	
Single	Dual	Inch	(mm)	Inch	(mm)	Inch	(mm)
5	10	.760	(19.30)	.600	(15.24)	.400	(10.16)
10	20	1.260	(32.00)	1.100	(27.94)	.900	(22.86)
15	30	1.760	(44.70)	1.600	(40.64)	1.400	(35.56)
18	36	2.060	(52.32)	1.900	(48.26)	1.700	(43.18)
22	44	2.460	(62.48)	2.300	(58.42)	2.100	(53.34)
25	50	2.760	(70.10)	2.600	(66.04)	2.400	(60.96)
28	56	3.060	(77.72)	2.900	(73.66)	2.700	(68.58)
30	60	3.260	(82.80)	3.100	(78.74)	2.900	(73.66)
31	62	3.360	(85.34)	3.200	(81.28)	3.000	(76.20)
35	70	3.760	(95.50)	3.600	(91.44)	3.400	(86.36)
36	72	3.860	(98.04)	3.700	(93.98)	3.500	(88.90)
43	86	4.560	(115.82)	4.400	(111.76)	4.200	(106.68)
50	100	5.260	(133.60)	5.100	(129.54)	4.900	(124.46)
75	150	7.760	(197.10)	7.600	(193.04)	7.400	(187.96)

Dimensions of Other Connector Sizes are Listed

Downloaded from Elcodis.com electronic components distributor

746 SERIES ULTRA-MATE CARD EDGE CONNECTOR

.125" (3.18mm) Contact Spacing, Compliant Pin

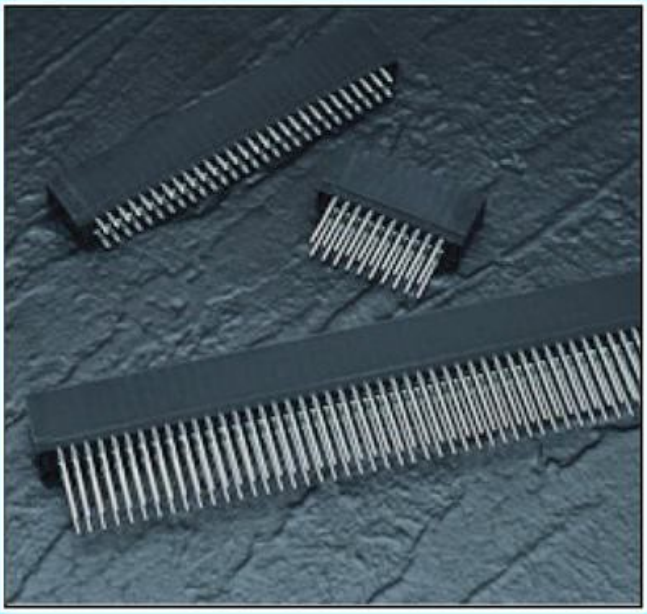

746 SERIES ORDERING CODE

Example Part Number 746 - 070 - 525 - 6 01

- **Series** — 746
- **Total Number of Contacts** — 070
- **Contact Code** — 525
- **Contact Rows & Card Slot Depth** — 6
- **Insulator Options** — 01

Series 746

Total Number of Contacts [1]	Contact Rows
005, 006,...060	Single Row
010, 012,...120	Dual Row

Contact Code [2]	Description	& Contact Point	Tail Length "G"
520	P.C. Tail	Regular Point	.175 (4.45)
525	P.C. Tail	High Point	.175 (4.45)
527	P.C. Tail	High Point	.375 (9.53)
540	Wire Wrap	Regular Point	.560 (14.22)
541	Wire Wrap	Regular Point	.750 (19.05)
545	Wire Wrap	High Point	.560 (14.22)
553	Wire Wrap	Medium Point	.702 (17.83)

Contact Rows & Card Slot Depth	Description
1	Single Row, .515 (13.08) Slot Depth
2	Dual Row, .515 (13.08) Slot Depth
5	Single Row, .340 (8.64) Slot Depth
6	Dual Row, .340 (8.64) Slot Depth

Insulator Options	Description
01	.645 (16.38) Full Height Ends
06	.550 (13.97) Notched Ends

Ordering Code Notes

1) All connector sizes up to 60 contacts single row / 120 contacts dual row are available upon request.
2) Make-before-break switching contacts, assembled in specific contact positions, are available upon request.

FEATURES

- CSA Approved and UL Recognized
- .125 (3.18) Contact Spacing x .250 (6.35) Row Spacing
- Accepts .062 (1.57) Nominal Thickness P.C. Board
- High Profile Insulator Body, .645 (16.38) with End Notch Option
- Ultra-Mate Compliant Section for Gas-Tight Reliable Connection in Plated Through Holes Eliminates Soldering Operations
- Contact Termination Options include P.C. Tail and .025 (0.64) Square Wire Wrap
- Single or Dual Row Configurations
- Accepts Between Contact and In-Contact Polarizing Keys
- Tools Available for Insulator and Contact Removal. Simple "Flat Rock" Tooling is Used for Connector Installation

SPECIFICATIONS

- Insulator Material: Thermoplastic Polyester, UL 94V-O, Colour: Black
- Contact Material: Copper, Nickel, Tin Alloy CA-725
- Contact Plating: 30 Microinches (0.76 Microns) Gold on the Mating Area, Tin on the Compliant Section and Contact Tails, Nickel Underplate. Other Plating Options Available upon Request.
- Current Rating: 3 Amperes Continuous
- Dielectric Withstanding Voltage: 1500 V AC rms at Sea Level Between Adjacent Contacts
- Insulation Resistance: 5000 Megohms Minimum
- Operating Temperature: -65 to +105 Degrees C
- Daughter Board Insertion Force: 16 oz (4.45 N) Maximum per Contact Pair when Tested with a .070 (1.78) Thick Gauge
- Daughter Board Withdrawal Force: 1 oz (0.28 N) Minimum per Contact Pair when Tested with a .054 (1.37) Thick Gauge
- Contact Insertion Into Hole: 20 lbs (89 N) Maximum
- Contact Retention In Hole: 10 lbs (44 N) Minimum
- Re-Insertability of Hole: 3 Times Minimum

IN-CONTACT POLARIZING KEY

P/N 746-240-328

BETWEEN CONTACT POLARIZING KEY

P/N 306-240-318

Downloaded from Elcodis.com electronic components distributor

ULTRA-MATE CARD EDGE CONNECTOR SERIES 746

Compliant Pin, Contact Spacing .125" (3.18mm)

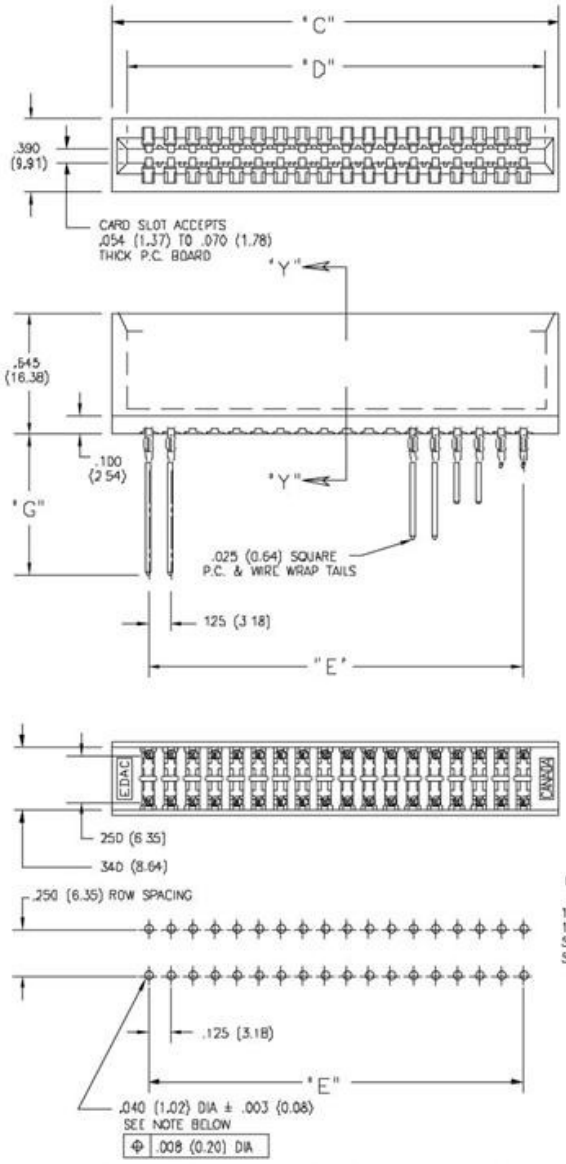

RECOMMENDED MOTHER BOARD HOLE PATTERN

TO OBTAIN OPTIMUM COMPLIANT SECTION PERFORMANCE, DRILL HOLES .0453 ± .001 (1.15 ± 0.03) DIAMETER COPPER PLATE, .001 (25.4 MICRONS) MINIMUM THICKNESS, FOLLOWED BY TIN PLATE TO PROVIDE FINISHED HOLES .040 ± .003 (1.02 ± 0.08) DIAMETER

SECTIONS "Y"–"Y"
CONTACT ROWS & INSULATOR OPTIONS

Single Row Versions May Require Backup Springs Depending on the Application. Consult with EDAC for Details.

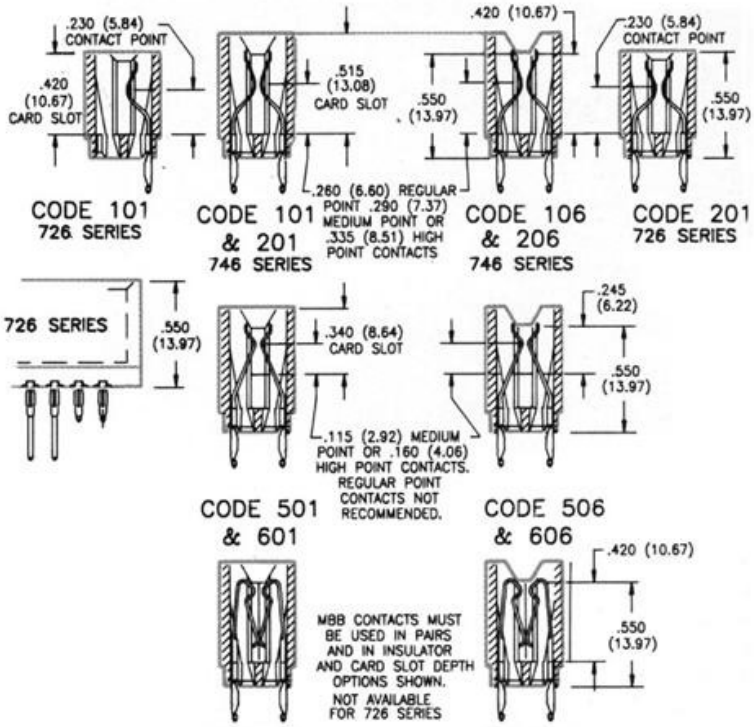

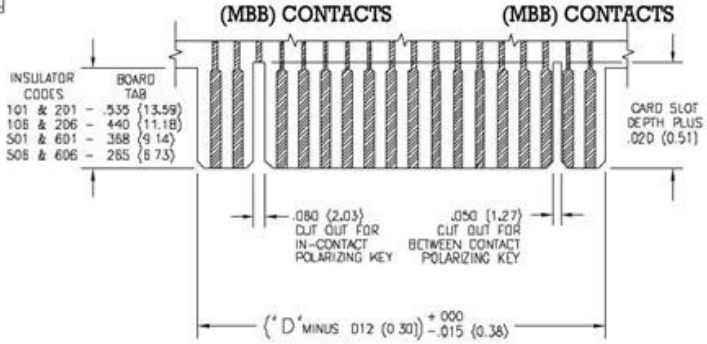

RECOMMENDED DAUGHTER BOARD

NUMBER OF CONTACTS		"C"		"D"		"E"	
Single	Dual	Inch	(mm)	Inch	(mm)	Inch	(mm)
5	10	.910	(23.11)	.750	(19.05)	.500	(12.70)
6	12	1.035	(26.29)	.875	(22.23)	.625	(15.88)
15	30	2.160	(54.86)	2.000	(50.80)	1.750	(44.45)
18	36	2.535	(64.39)	2.375	(60.33)	2.125	(53.98)
22	44	3.035	(77.09)	2.875	(73.03)	2.625	(66.68)
25	50	3.410	(86.61)	3.250	(82.55)	3.000	(76.20)
28	56	3.785	(96.14)	3.625	(92.08)	3.375	(85.73)
30	60	4.035	(102.49)	3.875	(98.43)	3.625	(92.08)
35	70	4.660	(118.36)	4.500	(114.30)	4.250	(107.95)
36	72	4.785	(121.54)	4.625	(117.48)	4.375	(111.13)
40	80	5.285	(134.24)	5.125	(130.18)	4.875	(123.83)
43	86	5.660	(143.76)	5.500	(139.70)	5.250	(133.35)
50	100	6.535	(165.99)	6.375	(161.93)	6.125	(155.58)
60	120	7.785	(197.74)	7.625	(193.68)	7.375	(187.33)

Dimensions of Other Connector Sizes are Listed

Downloaded from Elcodis.com electronic components distributor

737 SERIES ULTRA-MATE CARD EDGE CONNECTOR

.156" (3.96mm) Contact Spacing, Compliant Pin

737 SERIES ORDERING CODE

Example Part Number 737 - 044 - 520 - 206

- **Series** — 737
- **Total Number of Contacts** — 044
- **Contact Code** — 520
- **Contact Rows** — 206

Series 737

Total Number of Contacts [1]	Contact Rows
005, 006,...043	Single Row
010, 012,...086	Dual Row

Contact Code [2]	Description & Contact Point	Tail Length "G"
520	P.C. Tail Regular Point	.175 (4.45)
522	P.C. Tail Regular Point	.375 (9.53)
525	P.C. Tail High Point	.175 (4.45)
540	Wire Wrap Regular Point	.560 (14.22)
541	Wire Wrap Regular Point	.750 (19.05)
545	Wire Wrap High Point	.560 (14.22)

Contact Rows	Description
106	Single Row
206	Dual Row

Ordering Code Notes

1) All connector sizes up to 43 contacts single row / 86 contacts dual row are available upon request.
2) Make-before-break switching contacts, assembled in specific contact positions, are available upon request.

FEATURES

- UL Recognized
- .156 (3.96) Contact Spacing x .200 (5.08) Row Spacing
- Accepts .062 (1.57) Nominal Thickness P.C. Board
- High Profile Insulator Body, .645 (16.38) with End Notches
- Ultra-Mate Compliant Section for Gas-Tight Reliable Connection in Plated Through Holes Eliminates Soldering Operations
- Contact Termination Options include P.C. Tail and .025 (0.64) Square Wire Wrap
- Single or Dual Row Configurations
- Accepts Between Contact and In-Contact Polarizing Keys
- Tools Available for Insulator and Contact Removal. Simple "Flat Rock" Tooling is Used for Connector Installation

SPECIFICATIONS

- Insulator Material: Thermoplastic Polyester, UL 94V-O, Colour: Black
- Contact Material: Copper, Nickel, Tin Alloy CA-725
- Contact Plating: 30 Microinches (0.76 Microns) Gold on the Mating Area, Tin on the Compliant Section and Contact Tails, Nickel Underplate. Other Plating Options Available upon Request.
- Current Rating: 3 Amperes Continuous
- Contact Resistance: 10 Milliohms Maximum
- Dielectric Withstanding Voltage: 1800 V AC rms at Sea Level Between Adjacent Contacts
- Insulation Resistance: 5000 Megohms Minimum
- Operating Temperature: -65 to +105 Degrees C
- Daughter Board Insertion Force: 16 oz (4.45 N) Maximum per Contact Pair when Tested with a .070 (1.78) Thick Gauge
- Daughter Board Withdrawal Force: 1 oz (0.28 N) Minimum per Contact Pair when Tested with a .054 (1.37) Thick Gauge
- Contact Insertion into Hole: 20 lbs (89 N) Maximum
- Contact Retention in Hole: 10 lbs (44 N) Minimum
- Re-Insertability of Hole: 3 Times Minimum

IN–CONTACT POLARIZING KEY

P/N 745-240-328

BETWEEN CONTACT POLARIZING KEY

P/N 306-240-318

Downloaded from Elcodis.com electronic components distributor

ULTRA-MATE CARD EDGE CONNECTOR SERIES 737

Compliant Pin, Contact Spacing .156" (3.96mm)

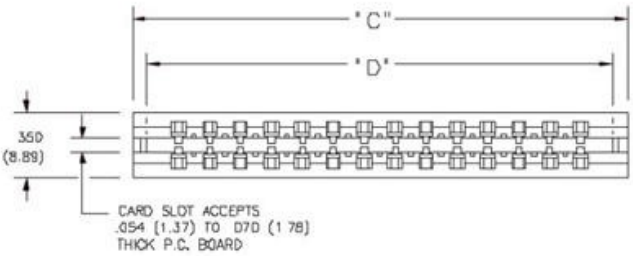

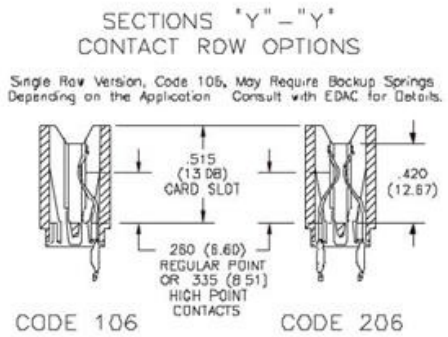

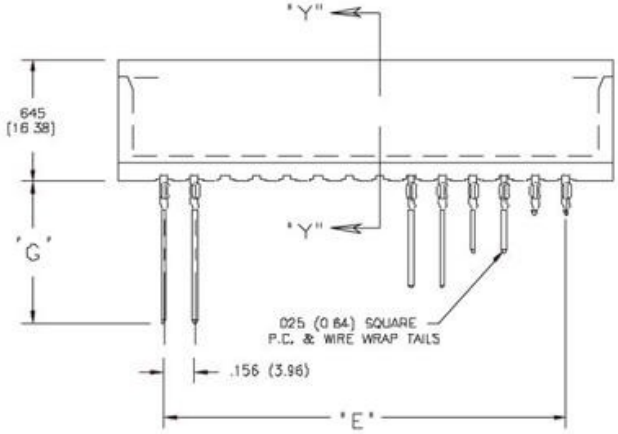

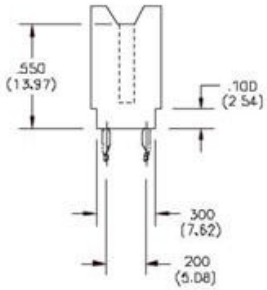

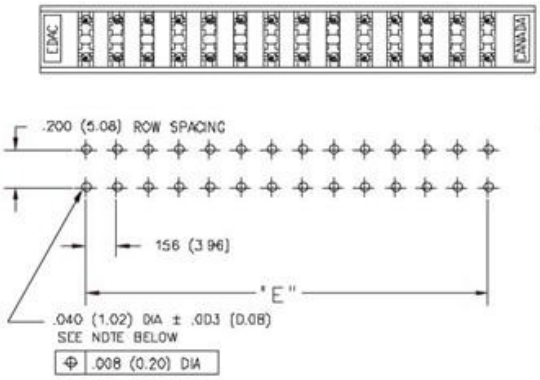

RECOMMENDED MOTHER BOARD HOLE PATTERN

TO OBTAIN OPTIMUM COMPLIANT SECTION PERFORMANCE, DRILL HOLES .0453 ± .001 (1.15 ± 0.03) DIAMETER COPPER PLATE, .001 (25.4 MICRONS) MINIMUM THICKNESS, FOLLOWED BY TIN PLATE TO PROVIDE FINISHED HOLES .040 ± .003 (1.02 ± 0.08) DIAMETER

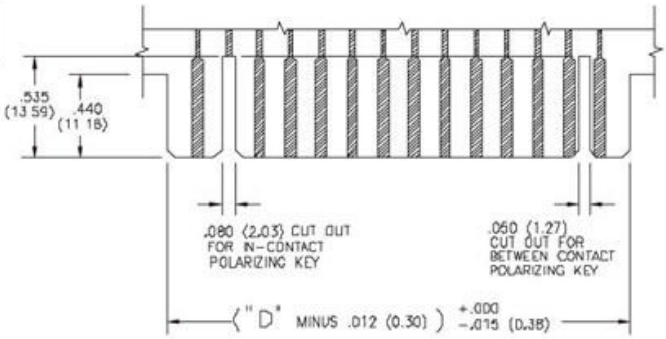

RECOMMENDED DAUGHTER BOARD

NUMBER OF CONTACTS		"C"		"D"		"E"	
Single	Dual	Inch	(mm)	Inch	(mm)	Inch	(mm)
5	10	1.246	(31.65)	1.100	(27.94)	.780	(19.81)
6	12	1.402	(35.61)	1.256	(31.90)	.936	(23.77)
10	20	2.026	(51.46)	1.880	(47.75)	1.560	(39.62)
15	30	2.806	(71.27)	2.660	(67.56)	2.340	(59.44)
18	36	3.274	(83.16)	3.128	(79.45)	2.808	(71.32)
20	40	3.586	(91.08)	3.440	(87.38)	3.120	(79.25)
22	44	3.898	(99.01)	3.752	(95.30)	3.432	(87.17)
25	50	4.366	(110.90)	4.220	(107.19)	3.900	(99.06)
28	56	4.834	(122.78)	4.688	(119.08)	4.368	(110.95)
30	60	5.146	(130.71)	5.000	(127.00)	4.680	(118.87)
31	62	5.302	(134.67)	5.156	(130.96)	4.836	(122.83)
33	66	5.614	(142.60)	5.468	(138.89)	5.148	(130.76)
36	72	6.082	(154.48)	5.936	(150.77)	5.616	(142.65)
43	86	7.174	(182.22)	7.028	(178.51)	6.708	(170.38)

Dimensions of Other Connector Sizes are Listed

Downloaded from Elcodis.com electronic components distributor

745 SERIES (98 PIN-AT) ULTRA-MATE CARD EDGE CONNECTOR

.100" (2.54mm) Contact Spacing, Compliant Pin

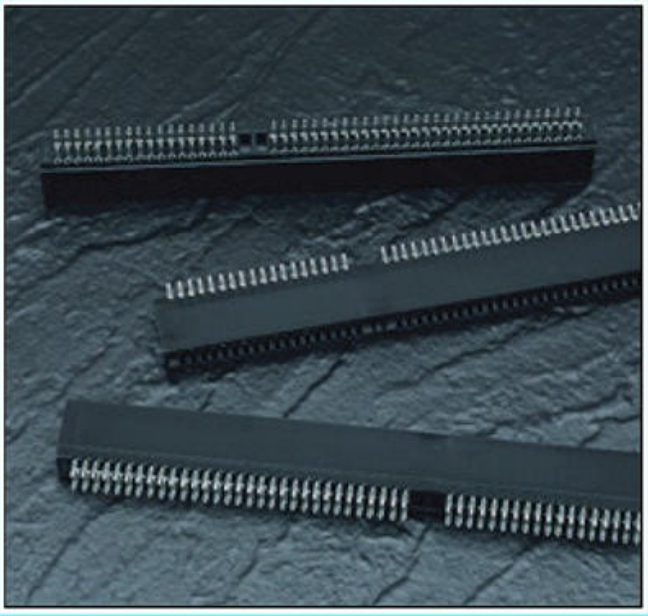

745 SERIES (98 PIN-AT) ORDERING CODE

Example Part Number 745 - 098 - 520 - 900

- **Series** — 745
- **Total Number of Contacts** — 098
- **Contact Code** — 520
- **Variation Code** — 900

Series 745

Total Number of Contacts 098

Contact Code
See 745 Series for Available Contact Options and "G" Dimension

Variation Code	Description
900	Card Slot Barrier with .645 (16.38) Full Height Ends
904	Card Slot Barrier with .550 (13.97) Notched Ends

FEATURES

- CSA Approved and UL Recognized
- Ultra-Mate Compliant Pin Connector for IBM-AT Industry Standard Architecture
- Card Slot Barrier Divides 98 Pin Connector into Groups of 62 and 36 Contacts
- For Additional Features and Specifications, Refer to 745 Series

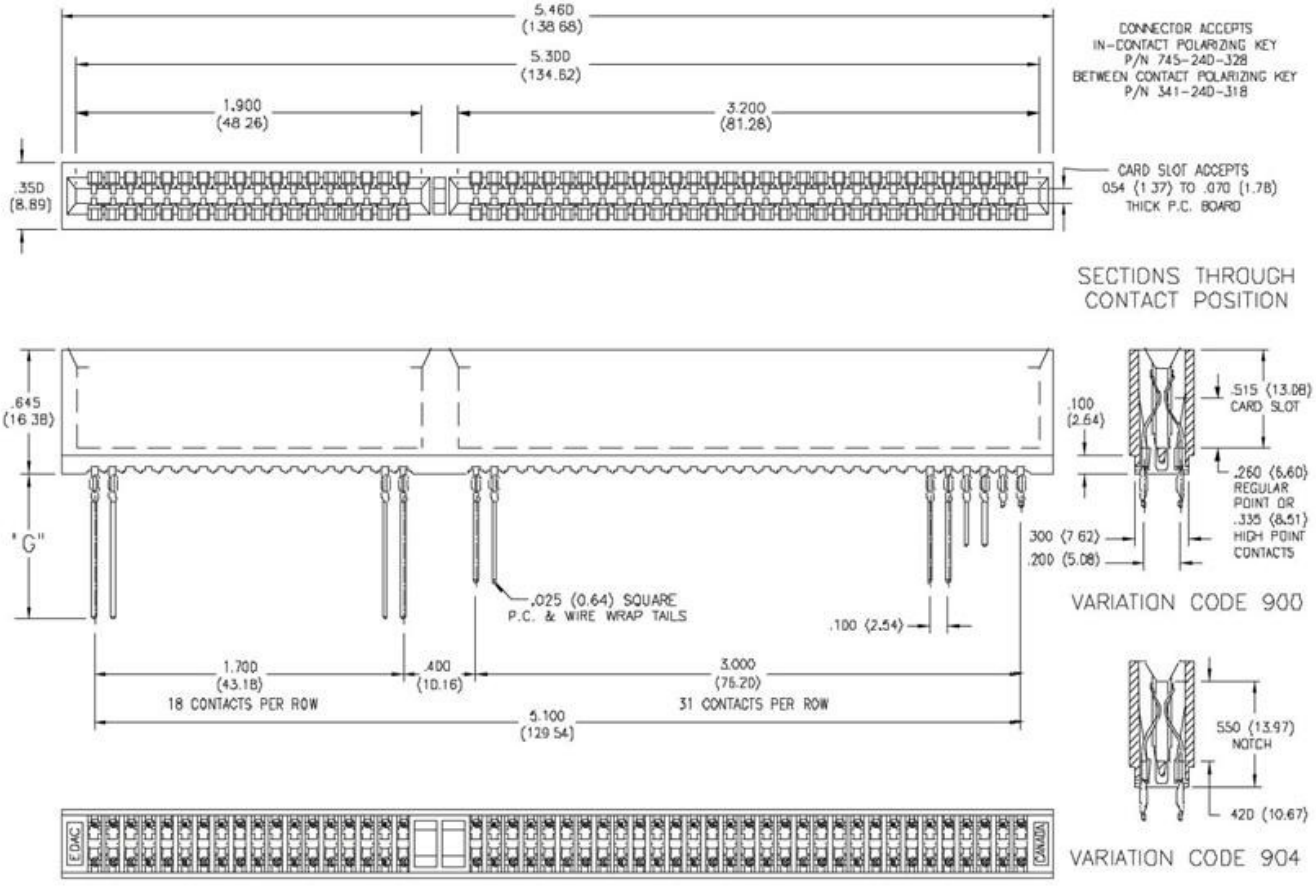

Downloaded from Elcodis.com electronic components distributor

EISA CARD EDGE CONNECTOR SERIES 301

Contact Spacing .050" (1.27mm)

301 SERIES ORDERING CODE

Part Number **301 - 188 - 520 - 201**

- **Series** — 301
- **Total Number of Contacts** — 188
- **Contact Code** — 520
- **Style** — 201

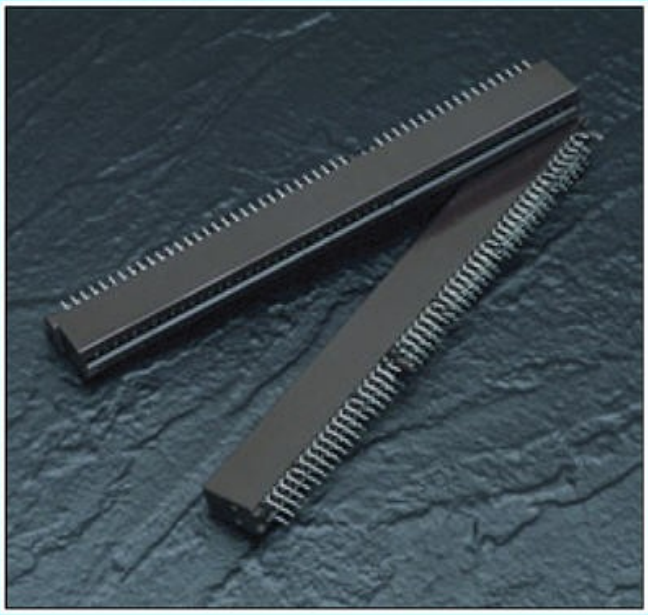

FEATURES

- EISA or ISA (IBM XT/AT) Daughter Boards Accommodated with Bi-Level Contact Points and Card Slot Depths
- .050 (1.27) Contact Spacing with Staggered Tail Bend Results in 4 Rows at .100 (2.54) Spacing
- Accepts .062 (1.57) Nominal Thickness P.C. Board, Accurately Positioned by a Card Slot Barrier
- High Profile Insulator Body, .610 (15.49)
- Mounting Posts Provide Positive Location and Retention
- P.C. Tail Contact Termination

SPECIFICATIONS

- Insulator Material: Polyphenylene Sulphide, UL 94V-0, Colour: Brown
- Contact Material: Phosphor Bronze
- Contact Plating: Gold on the Mating Area, Tin on the Contact Tails, Nickel Underplate
- Current Rating: 1 Ampere Continuous
- Contact Resistance: 30 Milliohms Maximum
- Dielectric Withstanding Voltage: 500 V AC rms at Sea Level
- Insulation Resistance: 1000 Megohms Minimum
- Operating Temperature: -55 to +85 Degrees C
- Insertion Force: 6 oz (1.67 N) Maximum per Contact Pair when Tested with a .062 (1.57) Thick Gauge
- Withdrawal Force: .75 oz (0.21 N) Minimum per Contact Pair when Tested with a .062 (1.57) Thick Gauge

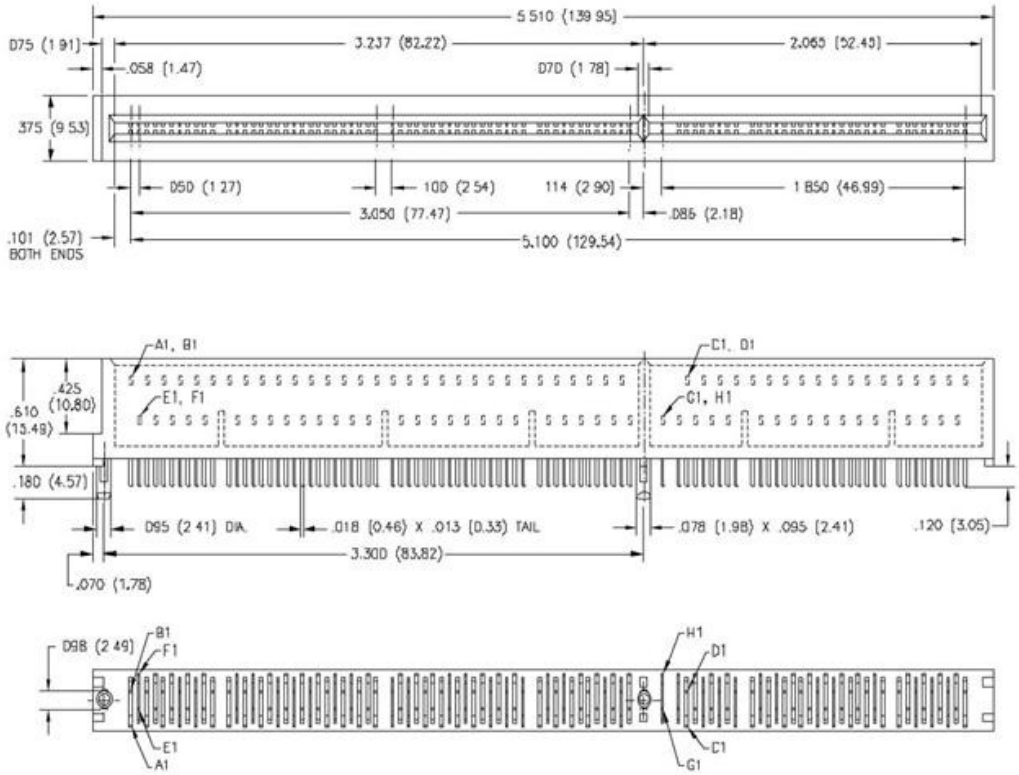

SECTION THROUGH CONTACT POSITION

SHOWING BOTH UPPER AND LOWER TIER CONTACTS (OPPOSING CONTACTS ARE ACTUALLY ON THE SAME TIER)

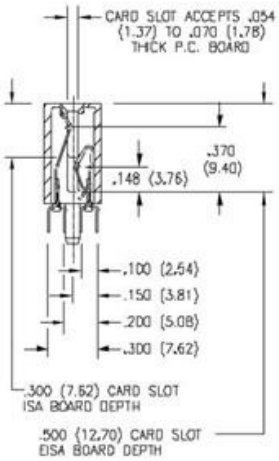

Downloaded from Elcodis.com electronic components distributor

302 SERIES MCA CARD EDGE CONNECTOR

.050"(1.27mm) Contact Spacing

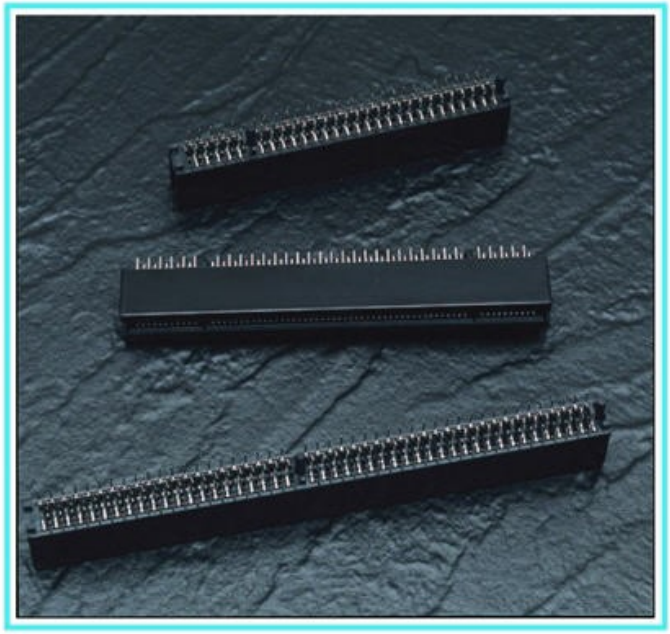

302 SERIES ORDERING CODE

Example Part Number 302 - 182 - 520 - 201

Series — 302
Total Number of Contacts — 182
Contact Code — 520
Style — 201

Series 302

Total Number of Contacts	Description
112	Divided into Groups of 90 & 22 Contacts
132	Divided into Groups of 20, 90 & 22 Contacts
182	Divided into Groups of 98 & 84 Contacts

Contact Code 520

Style 201

FEATURES

- Accommodates MCA (Microchannel Architecture) Daughter Boards for IBM PS/2 Systems
- .050 (1.27) Contact Spacing with Staggered Tail Bend Results in 4 Rows at .100 (2.54) Spacing
- Accepts .062 (1.57) Nominal Thickness P.C. Board, Accurately Positioned by Card Slot Barrier
- High Profile Insulator Body, .610 (15.49)
- Mounting Posts Provide Positive Location and Retention
- P.C. Tail Contact Termination
- Many other sizes available. Please contact Edac for additional items

SPECIFICATIONS

- Insulator Material: Polyphenylene Sulphide, UL 94V-0, Colour: Black
- Contact Material: Phosphor Bronze
- Contact Plating: Gold on the Mating Area, Tin on the Contact Tails, Nickel Underplate
- Current Rating: 1 Ampere Continuous
- Contact Resistance: 30 Milliohms Maximum
- Dielectric Withstanding Voltage: 500 V AC rms at Sea Level
- Insulation Resistance: 1000 Megohms Minimum
- Operating Temperature: -65 to +125 Degrees C
- Insertion Force: 8 oz (2.22 N) Maximum per Contact Pair when Tested with a .062 (1.57) Thick Gauge
- Withdrawal Force: 1 oz (0.28 N) Minimum per Contact Pair when Tested with a .062 (1.57) Thick Gauge

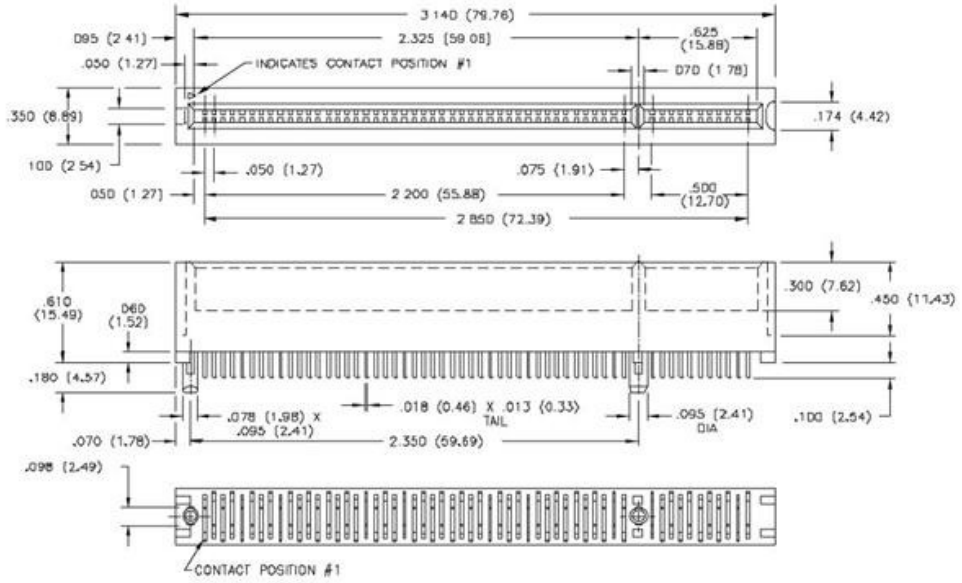

P/N 302-112-520-201

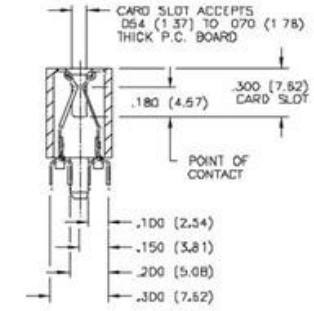

SECTION THROUGH CONTACT POSITION

Downloaded from Elcodis.com electronic components distributor

MCA CARD EGDE CONNECTOR SERIES 302

Contact Spacing .050" (1.27mm)

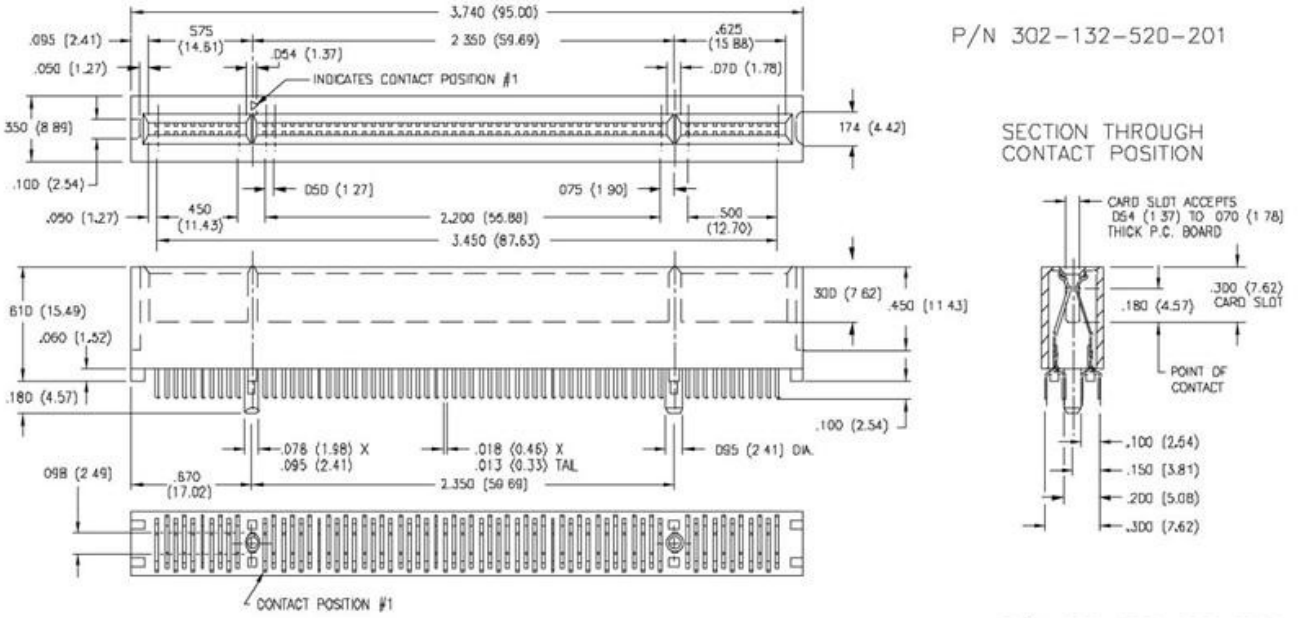

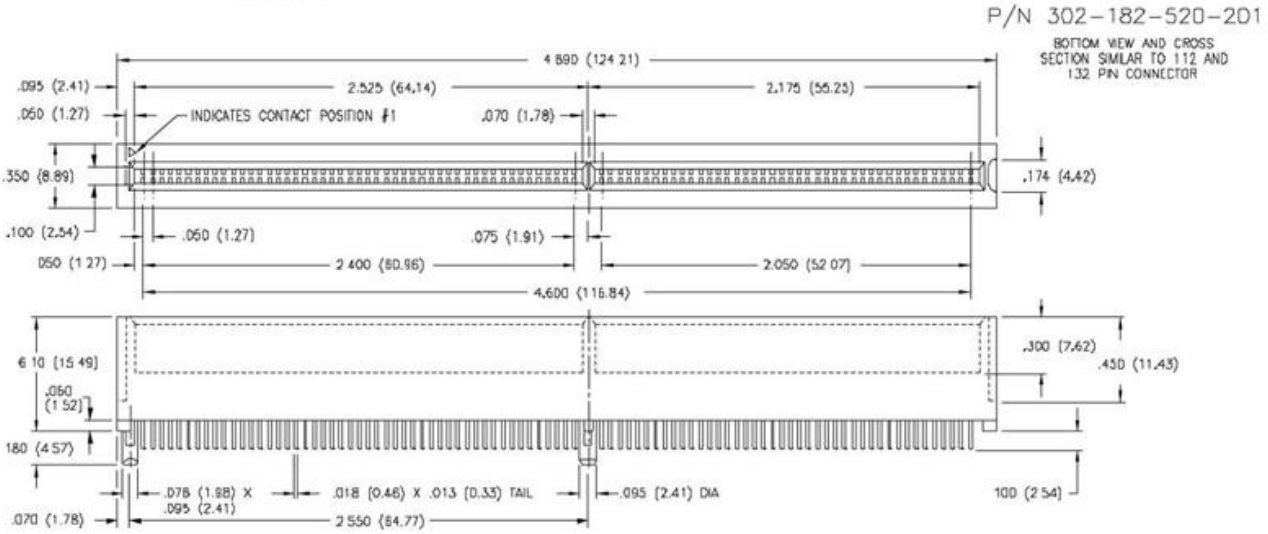

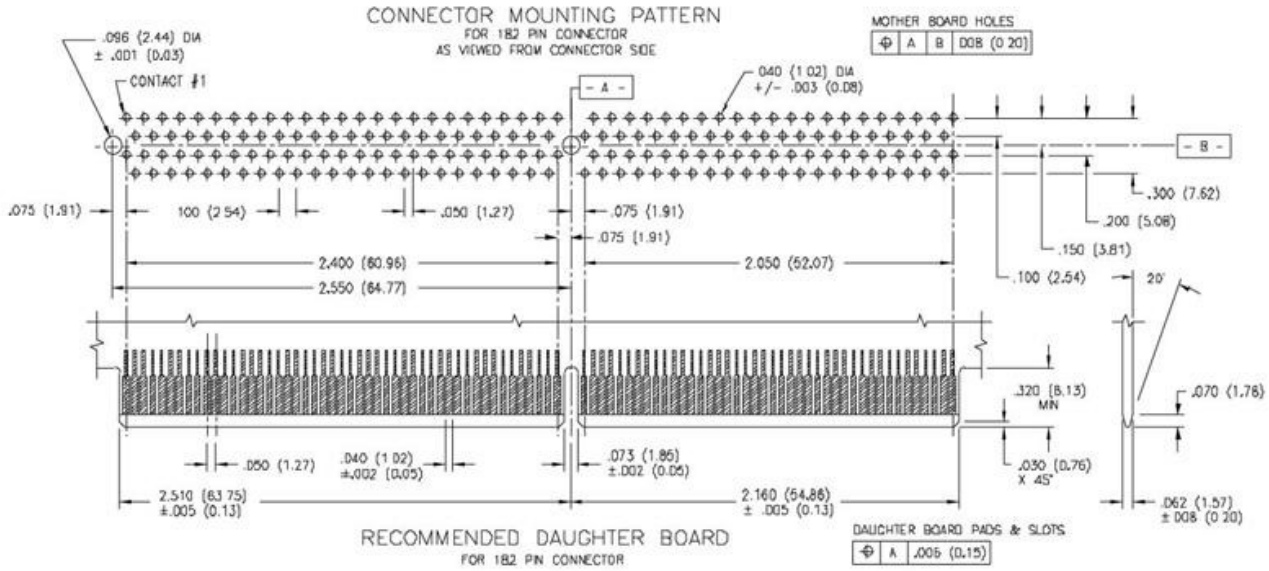

Downloaded from Elcodis.com electronic components distributor

345/395 SERIES CARD EDGE CONNECTOR

.100" (2.54mm) Contact Spacing

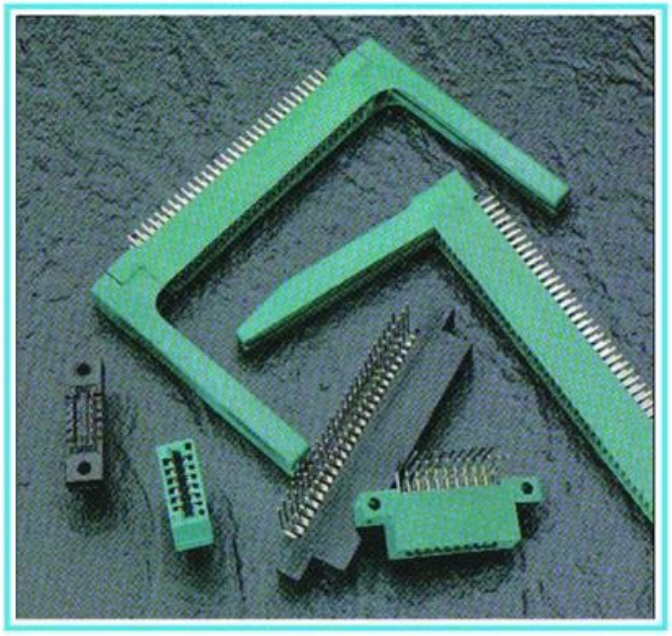

FEATURES

- CSA Approved and UL Recognized
- .100 (2.54) Contact Spacing x .200 (5.08) Row Spacing
- Accepts .062 (1.57) Nominal Thickness P.C. Board
- High Profile Insulator Body, .600 (15.24)
- Contact Termination Options include P.C. Tail, Wire Hole, Wire Wrap, 90 Degree & Extender Board Bends
- Single or Dual Row Configurations
- Large Variety of Mounting Options, Flush or Offset Lugs
- Pre-assembled Card Guides Available
- Accepts Between Contact and In-Contact Polarizing Keys
- Automatic Wire Wrap Positioning Holes

SPECIFICATIONS

- Insulator Material: Thermoplastic Polyester, UL 94V-0
- Contact Material: Copper, Nickel, Tin Alloy CA-725
- Contact Plating: Gold on the Mating Area, Tin on the Contact Tails, Nickel Underplate
- Current Rating: 3 Amperes Continuous
- Contact Resistance: 10 Milliohms Maximum
- Dielectric Withstanding Voltage: 1200 V AC rms at Sea Level Between Adjacent Contacts
- Insulation Resistance: 5000 Megohms Minimum
- Operating Temperature: -65 to +105 Degrees C
- Insertion Force: 16 oz (4.45 N) Maximum per Contact Pair when Tested with a .070 (1.78) Thick Gauge
- Withdrawal Force: 1 oz (0.28 N) Minimum per Contact Pair when Tested with a .054 (1.37) Thick Gauge

345/395 SERIES ORDERING CODE

Example Part Number 345 - 050 - 520 - 2 02

- **Series** — 345
- **Total Number of Contacts** — 050
- **Contact Code** — 520
- **Contact Rows and Insulator Style** — 2
- **Mounting Options** — 02

Series	Insulator Colour
345	Green
395	Black

Total Number of Contacts [1]	Contact Rows
005, 006,...072	Single Row
010, 012,...144	Dual Row

Contact Code [2,3]	Description & Tail Size	Tail Length "G"
500	Wire Hole .050 x .025 (1.27 x 0.64)	.260 (6.60)
520	P.C. Tail .030 x .018 (0.76 x 0.46)	.175 (4.45)
521	P.C. Tail .025 Square (0.64 Square)	.150 (3.81)
523	P.C. Tail .025 Square (0.64 Square)	.390 (9.91)
524	P.C. Tail .018 Square (0.46 Square)	.175 (4.45)
540	Wire Wrap .025 Square (0.64 Square)	.560 (14.22)
541	Wire Wrap .025 Square (0.64 Square)	.750 (19.05)
542	Wire Wrap .025 Square (0.64 Square)	.645 (16.38)
544	Wire Wrap .050 x .025 (1.27 x 0.64)	.750 (19.05)
555	Extender Board Bend (Code 500 Contacts)	
556	Extender Board Bend (Code 520 Contacts)	
558	90 Degree Bend (Code 541 Contacts)	
559	90 Degree Bend (Code 541 Contacts)	
560	Extender Board Bend (Code 523 Contacts)	

Contact Rows and Insulator Style	Description
1	Single Row, Flush Mounting Lugs
2	Dual Row, Flush Mounting Lugs
4	Single Row, .110 (2.79) Offset Lugs
5	Dual Row, .110 (2.79) Offset Lugs
6	Single Row, .170 (4.32) Offset Lugs
8	Dual Row, .170 (4.32) Offset Lugs

Mounting Options [4,5]	Description
01	No Mounting Lugs
02	.128 (3.25) Dia. Mounting Holes
03	.116 (2.95) I.D. Floating Eyelets
04	.156 (3.96) Dia. Mounting Holes
07	M3-0.5 Metric Threaded Inserts
08	#4-40 Unified Threaded Inserts
12	.128 (3.25) Dia. Side Mounting Holes
58	.468 (11.89) Offset Card Guides
78	In-Line Card Guides 2.750 (69.85) Long
88	In-Line Card Guides 1.250 (31.75) Long

Ordering Code Notes

1) All connector sizes up to 72 contacts single row / 144 contacts dual row are available upon request.
2) The 500 contact code is only available in the 345 series. Green polyphenylene sulphide insulator material will be supplied.
3) For details of the extender board and 90 degree bends, refer to page 61.
4) For lugless connectors, code 01 mounting, specify contact row codes 1 or 2.
5) For details of the mounting options, refer to page 63.

Downloaded from Elcodis.com electronic components distributor

CARD EDGE CONNECTOR SERIES 345/395

Contact Spacing .100" (2.54mm)

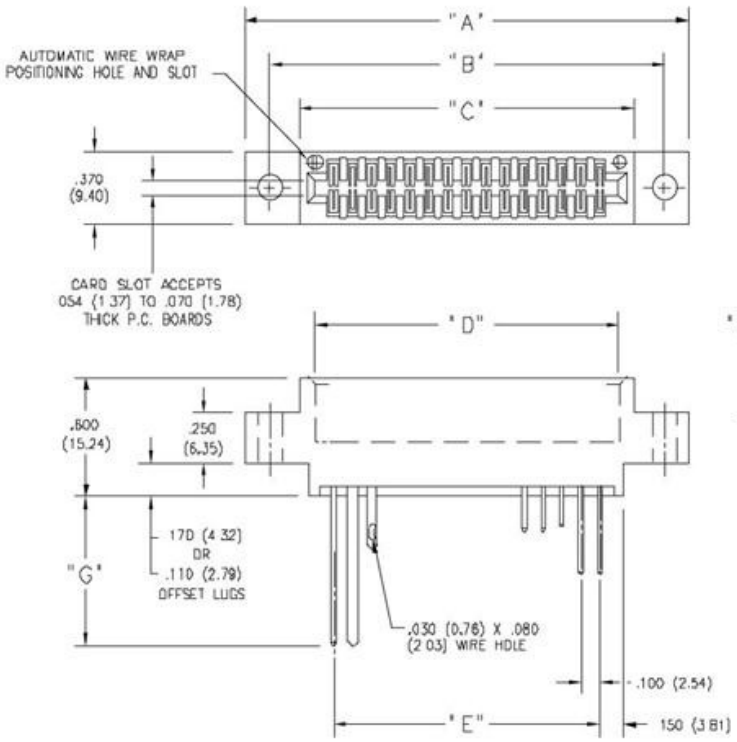

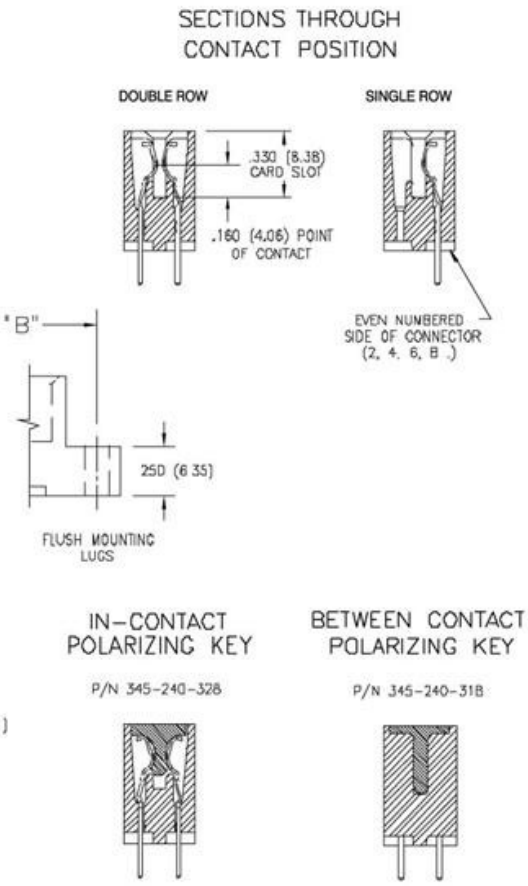

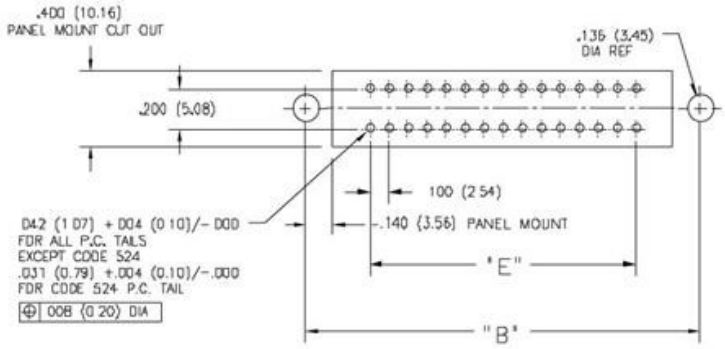

CONNECTOR MOUNTING PATTERN

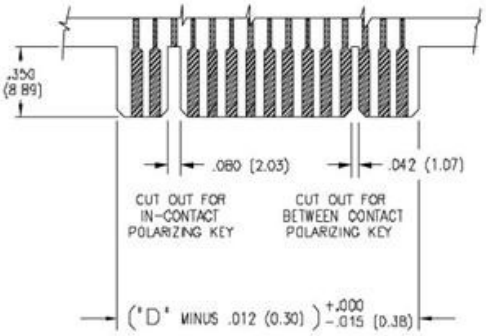

RECOMMENDED DAUGHTER BOARD

NUMBER OF CONTACTS		"A"		"B"		"C"		"D"		"E"	
Single	Dual	Inch	(mm)	Inch	(mm)	Inch	(mm)	Inch	(mm)	Inch	(mm)
5	10	1.335	(33.91)	1.075	(27.31)	.760	(19.30)	.600	(15.24)	.400	(10.16)
10	20	1.835	(46.61)	1.575	(40.01)	1.260	(32.00)	1.100	(27.94)	.900	(22.86)
13	26	2.135	(54.23)	1.875	(47.63)	1.560	(39.62)	1.400	(35.56)	1.200	(30.48)
15	30	2.335	(59.31)	2.075	(52.71)	1.760	(44.70)	1.600	(40.64)	1.400	(35.56)
18	36	2.635	(66.93)	2.375	(60.33)	2.060	(52.32)	1.900	(48.26)	1.700	(43.18)
22	44	3.035	(77.09)	2.775	(70.49)	2.460	(62.48)	2.300	(58.42)	2.100	(53.34)
25	50	3.335	(84.71)	3.075	(78.11)	2.760	(70.10)	2.600	(66.04)	2.400	(60.96)
30	60	3.835	(97.41)	3.575	(90.81)	3.260	(82.80)	3.100	(78.74)	2.900	(73.66)
31	62	3.935	(99.95)	3.675	(93.35)	3.360	(85.34)	3.200	(81.28)	3.000	(76.20)
36	72	4.435	(112.65)	4.175	(106.05)	3.860	(98.04)	3.700	(93.98)	3.500	(88.90)
43	86	5.135	(130.43)	4.875	(123.83)	4.560	(115.82)	4.400	(111.76)	4.200	(106.68)
50	100	5.835	(148.21)	5.575	(141.61)	5.260	(133.60)	5.100	(129.54)	4.900	(124.46)
60	120	6.835	(173.61)	6.575	(167.01)	6.260	(159.00)	6.100	(154.94)	5.900	(149.86)
72	144	8.035	(204.09)	7.775	(197.49)	7.460	(189.48)	7.300	(185.42)	7.100	(180.34)

Dimensions of Other Connector Sizes are Listed

Downloaded from Elcodis.com electronic components distributor

341/391 SERIES CARD EDGE CONNECTOR

.100" (2.54mm) Contact Spacing

FEATURES

- UL Recognized
- .100 (2.54) Contact Spacing x .140 (3.56) Row Spacing
- Accepts .062 (1.57) Nominal Thickness P.C. Board
- Low Profile Insulator Body, .437 (11.10)
- Contact Termination Options include P.C. Tail, Wire Hole & Extender Board Bends
- Single or Dual Row Configurations
- Variety of Mounting Options
- Accepts Between Contact and In-Contact Polarizing Keys

SPECIFICATIONS

- Insulator Material: Thermoplastic Polyester, UL 94V-0
- Contact Material: Copper, Nickel, Tin Alloy CA-725
- Contact Plating: Gold on the Mating Area, Tin on the Contact Tails, Nickel Underplate
- Current Rating: 3 Amperes Continuous
- Contact Resistance: 10 Milliohms Maximum
- Dielectric Withstanding Voltage: 1200 V AC rms at Sea Level Between Adjacent Contacts
- Insulation Resistance: 5000 Megohms Minimum
- Operating Temperature: -65 to +105 Degrees C
- Insertion Force: 16 oz (4.45 N) Maximum per Contact Pair when Tested with a .070 (1.78) Thick Gauge
- Withdrawal Force: 1 oz (0.28 N) Minimum per Contact Pair when Tested with a .054 (1.37) Thick Gauge

341/391 SERIES ORDERING CODE

Example Part Number 341 - 062 - 520 - 2 02

- Series — 341
- Total Number of Contacts — 062
- Contact Code — 520
- Contact Rows — 2
- Mounting Options — 02

Series	Insulator Colour
341	Green
391	Black

Total Number of Contacts [1]	Contact Rows
005, 006,...060	Single Row
010, 012,...120	Dual Row

Contact Code [2, 3]	Description & Tail Size	Tail Length "G"
500	Wire Hole .050 x .013 (1.27 x 0.33)	.220 (5.59)
520	P.C. Tail .025 x .013 (0.64 x 0.33)	.125 (3.18)
521	P.C. Tail .025 x .013 (0.64 x 0.33)	.260 (6.60)
522	P.C. Tail .025 x .013 (0.64 x 0.33)	.375 (9.53)
524	P.C. Tail .025 x .013 (0.64 x 0.33)	.100 (2.54)
555	Extender Board Bend (Code 500 Contacts)	
556	Extender Board Bend (Code 521 Contacts)	
560	Extender Board Bend (Code 522 Contacts)	

Contact Rows	Description
1	Single Row
2	Dual Row

Mounting Options [4]	Description
01	No Mounting Lugs
02	.128 (3.25) Dia. Mounting Holes
03	.116 (2.95) I.D. Floating Eyelets
04	.156 (3.96) Dia. Mounting Holes
07	M3-0.5 Metric Threaded Inserts
08	#4-40 Unified Threaded Inserts

Ordering Code Notes

1) All connector sizes up to 60 contacts single row / 120 contacts dual row are available upon request.
2) The 500 contact code is only available in the 341 series. Green polyphenylene sulphide insulator material will be supplied.
3) For details of the extender board bends, refer to page 61.
4) For details of the mounting options, refer to page 63.

Downloaded from Elcodis.com electronic components distributor

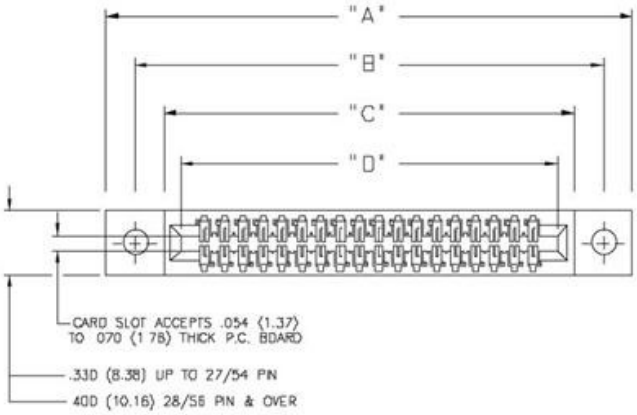

IN-CONTACT POLARIZING KEY
P/N 321-240-328

BETWEEN CONTACT POLARIZING KEY
P/N 341-240-318

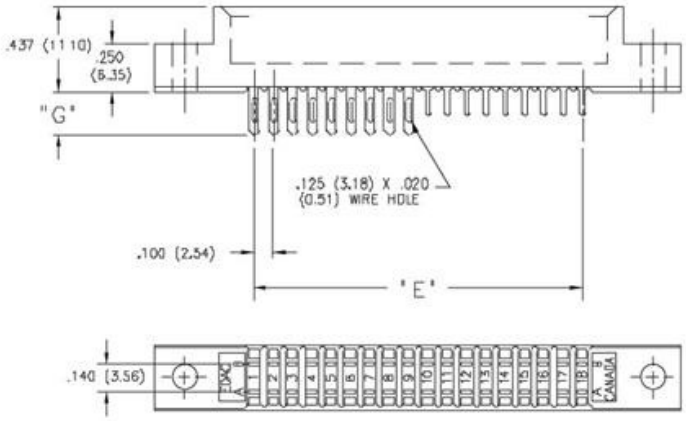

SECTION THROUGH CONTACT POSITION

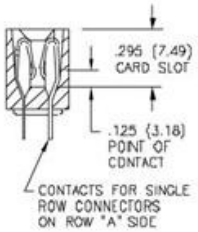

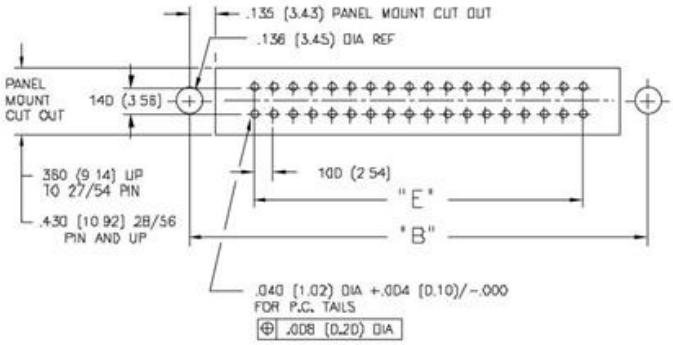

CONNECTOR MOUNTING PATTERN

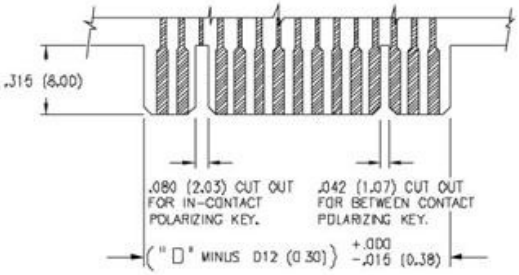

RECOMMENDED DAUGHTER BOARD

NUMBER OF CONTACTS		"A"		"B"		"C"		"D"		"E"	
Single	Dual	Inch	(mm)	Inch	(mm)	Inch	(mm)	Inch	(mm)	Inch	(mm)
5	10	1.375	(34.93)	1.075	(27.31)	.775	(19.69)	.600	(15.24)	.400	(10.16)
6	12	1.475	(37.47)	1.175	(29.85)	.875	(22.23)	.700	(17.78)	.500	(12.70)
10	20	1.875	(47.63)	1.575	(40.01)	1.275	(32.39)	1.100	(27.94)	.900	(22.86)
15	30	2.375	(60.33)	2.075	(52.71)	1.775	(45.09)	1.600	(40.64)	1.400	(35.56)
18	36	2.675	(67.95)	2.375	(60.33)	2.075	(52.71)	1.900	(48.26)	1.700	(43.18)
22	44	3.075	(78.11)	2.775	(70.49)	2.475	(62.87)	2.300	(58.42)	2.100	(53.34)
25	50	3.375	(85.73)	3.075	(78.11)	2.775	(70.49)	2.600	(66.04)	2.400	(60.96)
28	56	3.675	(93.35)	3.375	(85.73)	3.075	(78.11)	2.900	(73.66)	2.700	(68.58)
30	60	3.875	(98.43)	3.575	(90.81)	3.275	(83.19)	3.100	(78.74)	2.900	(73.66)
36	72	4.475	(113.67)	4.175	(106.05)	3.875	(98.43)	3.700	(93.98)	3.500	(88.90)
40	80	4.875	(123.83)	4.575	(116.21)	4.275	(108.59)	4.100	(104.14)	3.900	(99.06)
43	86	5.175	(131.45)	4.875	(123.83)	4.575	(116.21)	4.400	(111.76)	4.200	(106.68)
50	100	5.875	(149.23)	5.575	(141.61)	5.275	(133.99)	5.100	(129.54)	4.900	(124.46)
60	120	6.875	(174.63)	6.575	(167.01)	6.275	(159.39)	6.100	(154.94)	5.900	(149.86)

Dimensions of Other Connector Sizes are Listed

Downloaded from Elcodis.com electronic components distributor

342/392 SERIES CARD EDGE CONNECTOR

.100" (2.54mm) Contact Spacing

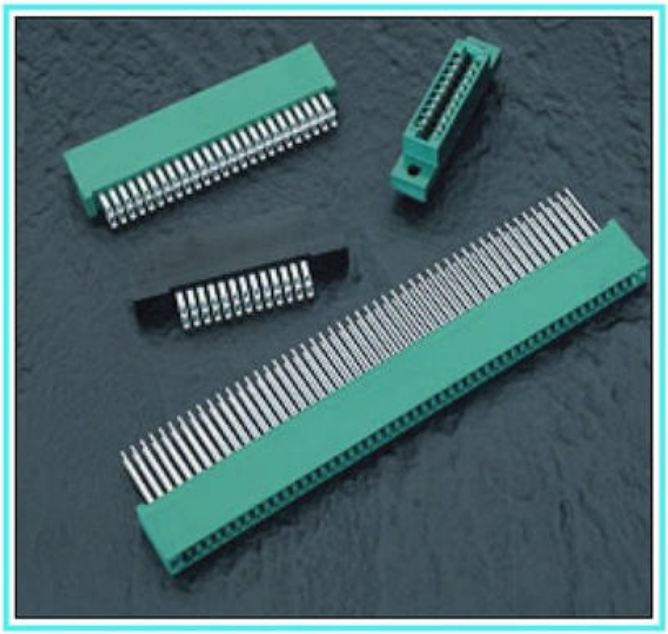

342/392 SERIES ORDERING CODE

Example Part Number 342 - 100 - 541 - 2 02

- **Series** — 342
- **Total Number of Contacts** — 100
- **Contact Code** — 541
- **Contact Rows** — 2
- **Mounting Options** — 02

Series	Insulator Colour
342	Green
392	Black

Total Number of Contacts [1]	Contact Rows
005, 006,...058	Single Row
010, 012,...116	Dual Row

Contact Code [2, 3]	Description & Tail Size	Tail Length "G"
500	Wire Hole .050 x .025 (1.27 x 0.64)	.270 (6.86)
520	P.C. Tail .030 x .018 (0.76 x 0.46)	.185 (4.70)
521	P.C. Tail .025 Square (0.64 Square)	.160 (4.06)
523	P.C. Tail .025 Square (0.64 Square)	.400 (10.16)
524	P.C. Tail .018 Square (0.46 Square)	.185 (4.70)
540	Wire Wrap .025 Square (0.64 Square)	.570 (14.48)
541	Wire Wrap .025 Square (0.64 Square)	.760 (19.30)
542	Wire Wrap .025 Square (0.64 Square)	.655 (16.64)
544	Wire Wrap .050 x .025 (1.27 x 0.64)	.760 (19.30)
555	Extender Board Bend (Code 500 Contacts)	
556	Extender Board Bend (Code 520 Contacts)	
558	90 Degree Bend (Code 541 Contacts)	
559	90 Degree Bend (Code 541 Contacts)	
560	Extender Board Bend (Code 523 Contacts)	

Contact Rows	Description
1	Single Row
2	Dual Row

Mounting Options [4]	Description
01	No Mounting Lugs
02	.128 (3.25) Wide Mounting Slots
03	.116 (2.95) I.D. Floating Eyelets
04	.156 (3.96) Dia. Mounting Holes
07	M3-0.5 Metric Threaded Inserts
08	#4-40 Unified Threaded Inserts
12	.128 (3.25) Dia. Side Mounting Holes

Ordering Code Notes

1) All connector sizes up to 58 contacts single row / 116 contacts dual row are available upon request.
2) The 500 contact code is only available in the 342 series. Green polyphenylene sulphide insulator material will be supplied.
3) For details of the extender board and 90 degree bends, refer to page 61.
4) For details of the mounting options, refer to page 63.

FEATURES

- UL Recognized
- .100 (2.54) Contact Spacing x .200 (5.08) Row Spacing
- Accepts .062 (1.57) Nominal Thickness P.C. Board
- High Profile Insulator Body, .590 (14.99)
- Contact Termination Options include P.C. Tail, Wire Hole, Wire Wrap, 90 Degree & Extender Board Bends
- Single or Dual Row Configurations
- Variety of Mounting Options
- Accepts Between Contact and In-Contact Polarizing Keys
- Design based on Requirements of HE 901 Specification

SPECIFICATIONS

- Insulator Material: Thermoplastic Polyester, UL 94V-0
- Contact Material: Copper, Nickel, Tin Alloy CA-725
- Contact Plating: Gold on the Mating Area, Tin on the Contact Tails, Nickel Underplate
- Current Rating: 3 Amperes Continuous
- Contact Resistance: 10 Milliohms Maximum
- Dielectric Withstanding Voltage: 1200 V AC rms at Sea Level Between Adjacent Contacts
- Insulation Resistance: 5000 Megohms Minimum
- Operating Temperature: -65 to +105 Degrees C
- Insertion Force: 16 oz (4.45 N) Maximum per Contact Pair when Tested with a .070 (1.78) Thick Gauge
- Withdrawal Force: 1 oz (0.28 N) Minimum per Contact Pair when Tested with a .054 (1.37) Thick Gauge

Downloaded from Elcodis.com electronic components distributor

CARD EDGE CONNECTOR SERIES 342/392

Contact Spacing .100" (2.54mm)

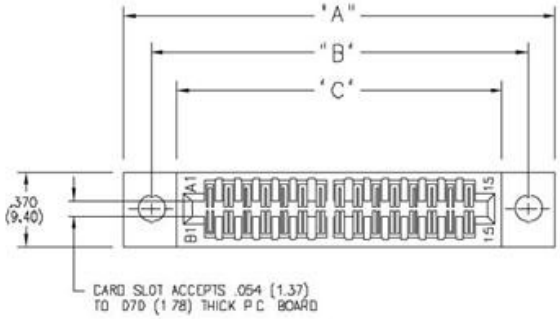

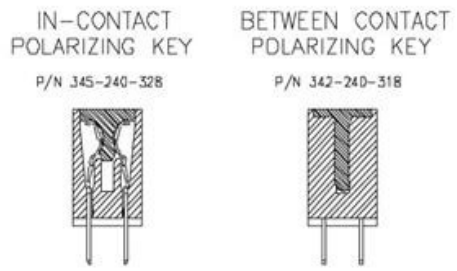

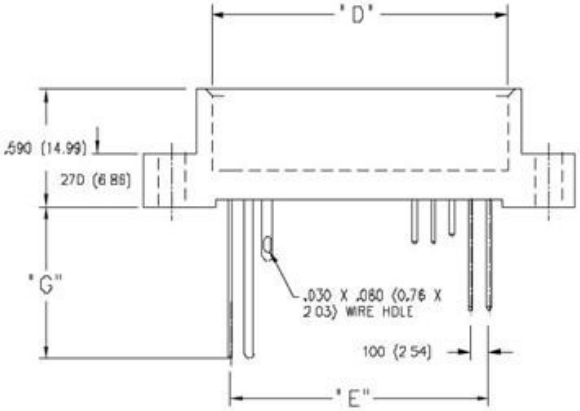

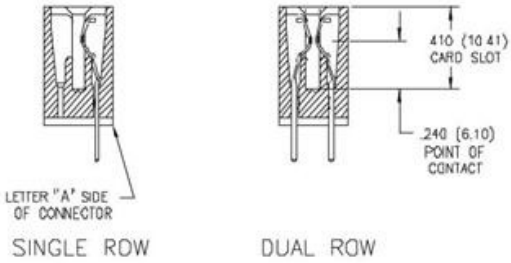

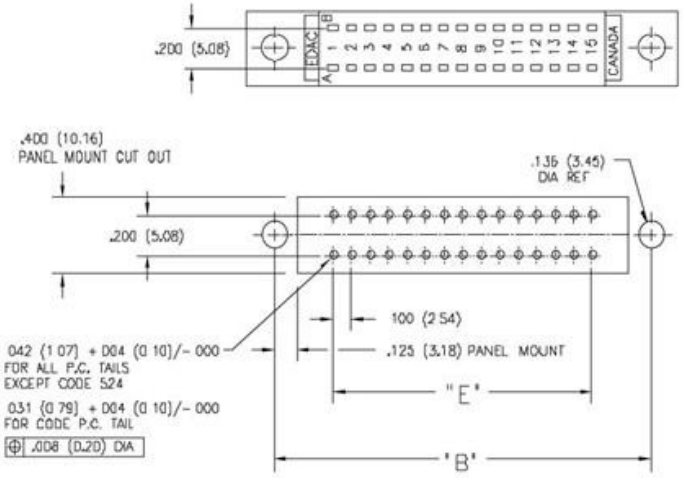

CONNECTOR MOUNTING PATTERN

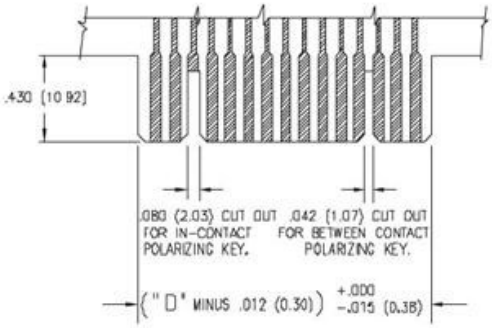

RECOMMENDED DAUGHTER BOARD

NUMBER OF CONTACTS		"A"		"B"		"C"		"D"		"E"	
Single	Dual	Inch	(mm)	Inch	(mm)	Inch	(mm)	Inch	(mm)	Inch	(mm)
5	10	1.300	(33.02)	1.022	(25.96)	.746	(18.95)	.600	(15.24)	.400	(10.16)
10	20	1.800	(45.72)	1.522	(38.66)	1.246	(31.65)	1.100	(27.94)	.900	(22.86)
13	26	2.100	(53.34)	1.822	(46.28)	1.546	(39.27)	1.400	(35.56)	1.200	(30.48)
15	30	2.300	(58.42)	2.022	(51.36)	1.746	(44.35)	1.600	(40.64)	1.400	(35.56)
18	36	2.600	(66.04)	2.322	(58.98)	2.046	(51.97)	1.900	(48.26)	1.700	(43.18)
22	44	3.000	(76.20)	2.722	(69.14)	2.446	(62.13)	2.300	(58.42)	2.100	(53.34)
25	50	3.300	(83.82)	3.022	(76.76)	2.746	(69.75)	2.600	(66.04)	2.400	(60.96)
30	60	3.800	(96.52)	3.522	(89.46)	3.246	(82.45)	3.100	(78.74)	2.900	(73.66)
31	62	3.900	(99.06)	3.622	(92.00)	3.346	(84.99)	3.200	(81.28)	3.000	(76.20)
35	70	4.300	(109.22)	4.022	(102.16)	3.746	(95.15)	3.600	(91.44)	3.400	(86.36)
36	72	4.400	(111.76)	4.122	(104.70)	3.846	(97.69)	3.700	(93.98)	3.500	(88.90)
43	86	5.100	(129.54)	4.822	(122.48)	4.546	(115.47)	4.400	(111.76)	4.200	(106.68)
50	100	5.800	(147.32)	5.522	(140.26)	5.246	(133.25)	5.100	(129.54)	4.900	(124.46)
58	116	6.600	(167.64)	6.322	(160.58)	6.046	(153.57)	5.900	(149.86)	5.700	(144.78)

Dimensions of Other Connector Sizes are Listed

Downloaded from Elcodis.com electronic components distributor

395 SERIES (98 PIN-AT) CARD EDGE CONNECTOR

.100" (2.54mm) Contact Spacing

395 SERIES (98 PIN-AT) ORDERING CODE

Example Part Number 395 - 098 - 520 - 300

Series
Total Number of Contacts
Contact Code
Variation Code

Series 395

Total Number of Contacts 098

Contact Code
See 345/395 Series for Available Contact Options and "G" Dimension
Code 500 Contact is Not Standard for 398-AT Connector

Variation Code	Description
300	Card Slot Barrier Divides the 98 Contacts into Groups of 62 and 36

FEATURES

- CSA Approved and UL Recognized
- For IBM-AT Industry Standard Architecture
- .100 (2.54) Contact Spacing x .200 (5.08) Row Spacing
- Accepts .062 (1.57) Nominal Thickness P.C. Board
- High Profile Insulator Body, .600 (15.24), Divided into Groups of 62 and 36 Contacts
- Contact Termination Options include P.C. Tail, Wire Wrap, 90 Degree & Extender Board Bends
- Accepts Between Contact and In-Contact Polarizing Keys

SPECIFICATIONS

- Insulator Material: Thermoplastic Polyester, UL 94V-0, Colour: Black
- Contact Material: Copper, Nickel, Tin Alloy CA-725
- Contact Plating: Gold on the Mating Area, Tin on the Contact Tails, Nickel Underplate
- Current Rating: 3 Amperes Continuous
- For Additional Specifications, Refer to 345/395 Series

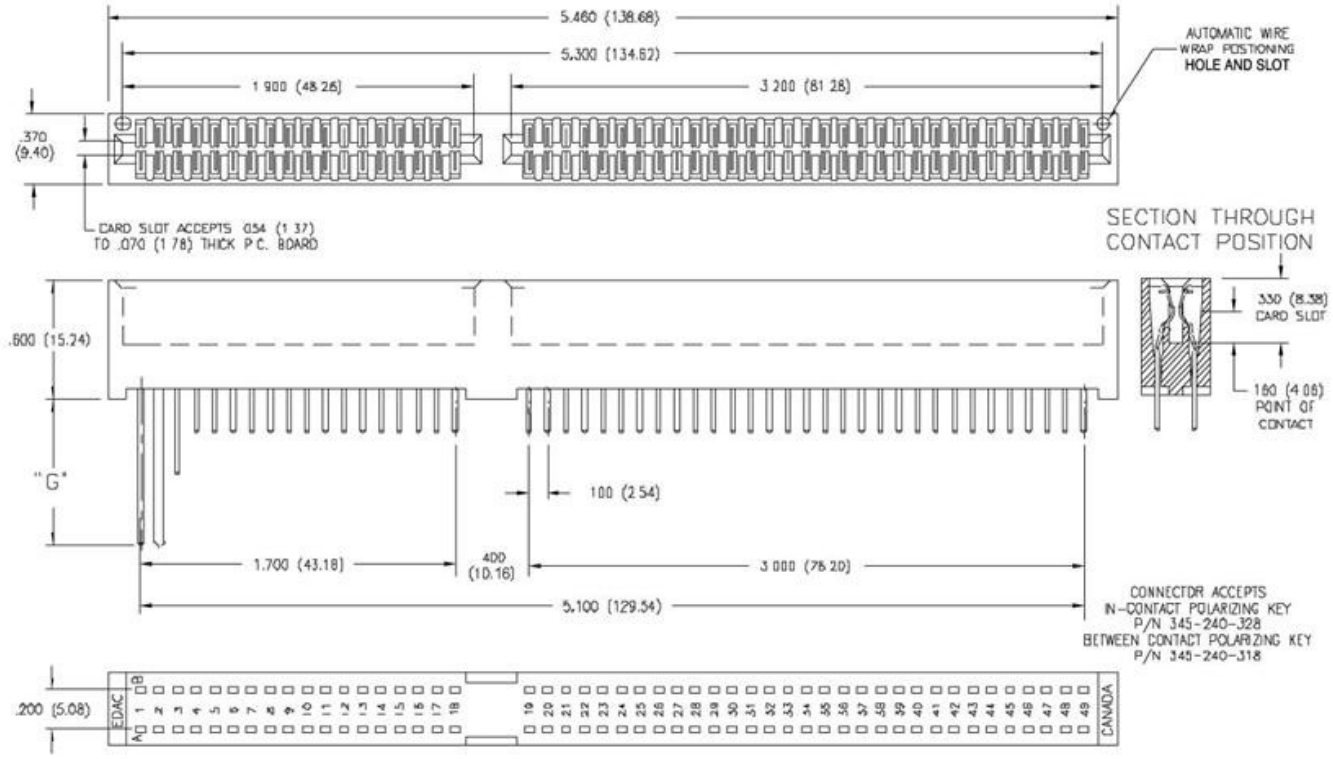

Downloaded from Elcodis.com electronic components distributor

340 SERIES ORDERING CODE

Example Part Number 340 - 050 - 523 - 2 02

- **Series** — 340
- **Total Number of Contacts** — 050
- **Contact Code** — 523
- **Contact Rows** — 2
- **Mounting Options** — 02

Series 340

Total Number of Contacts [1]	Contact Rows
005, 006,...060	Single Row
010, 012,...120	Dual Row

Contact Code

See 345/395 Series for Available Contact Options and "G" Dimension

Contact Rows	Description
1	Single Row
2	Dual Row

Mounting Options [2]	Description
01	No Mounting Lugs
02	.128 (3.25) Dia. Mounting Holes
04	.156 (3.96) Dia. Mounting Holes

Ordering Code Notes

1) All connector sizes up to 60 contacts single row / 120 contacts dual row are available upon request.
2) For details of the mounting options, refer to page 62.

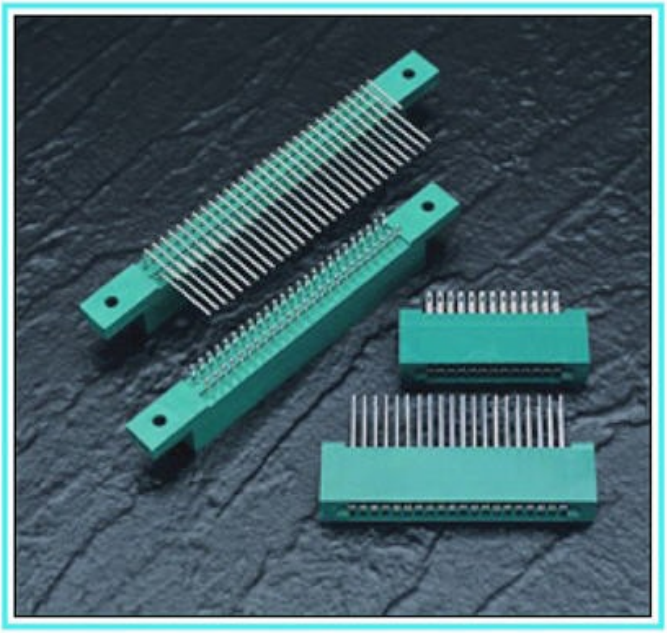

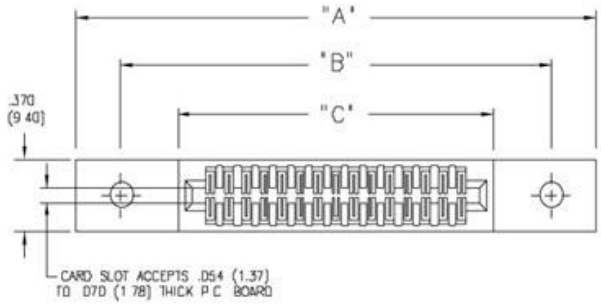

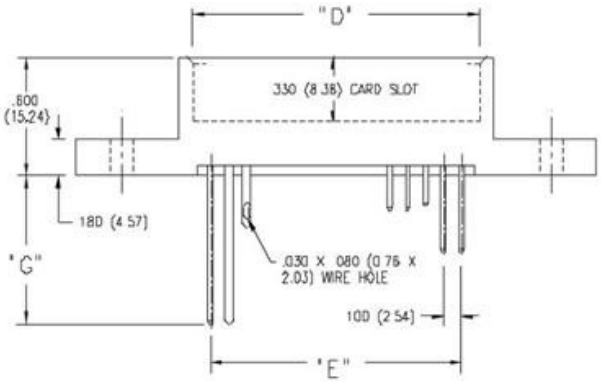

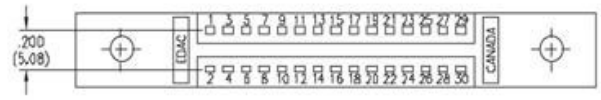

REFER TO 345/395 SERIES FOR CROSS SECTION AND POLARIZING KEY INFORMATION

FEATURES

- .100 (2.54) Contact Spacing x .200 (5.08) Row Spacing
- Accepts .062 (1.57) Nominal Thickness P.C. Board
- High Profile Insulator Body, .600 (15.24)
- Contact Termination Options include P.C. Tail, Wire Hole, Wire Wrap, 90 Degree & Extender Board Bends
- Single or Dual Row Configurations
- Accepts Between Contact and In-Contact Polarizing Keys

SPECIFICATIONS

- Insulator Material: Thermoplastic Polyester, UL 94V-0, Colour: Green
- Contact Material: Copper, Nickel, Tin Alloy CA-725
- Contact Plating: Gold on the Mating Area, Tin on the Contact Tails, Nickel Underplate
- Current Rating: 3 Amperes Continuous
- For Additional Specifications, Refer to 345/395 Series

NUMBER OF CONTACTS		"A"		"B"		"C"		"D"		"E"	
Single	Dual	Inch	(mm)	Inch	(mm)	Inch	(mm)	Inch	(mm)	Inch	(mm)
5	10	1.900	(48.26)	1.400	(35.56)	.965	(24.51)	.610	(15.49)	.400	(10.16)
18	36	3.200	(81.28)	2.700	(68.58)	2.265	(57.53)	1.910	(48.51)	1.700	(43.18)
30	60	4.400	(111.76)	3.900	(99.06)	3.465	(88.01)	3.110	(78.99)	2.900	(73.66)
43	86	5.700	(144.78)	5.200	(132.08)	4.765	(121.03)	4.410	(112.01)	4.200	(106.68)
60	120	7.400	(187.96)	6.900	(175.26)	6.465	(164.21)	6.110	(155.19)	5.900	(149.86)

Dimensions of Other Connector Sizes are Listed

Downloaded from Elcodis.com electronic components distributor

325 SERIES CARD EDGE CONNECTOR

.100" (2.54mm) Contact Spacing, Accepts .125" (3.18mm) Thick Board

325 SERIES ORDERING CODE

Example Part Number 325 - 122 - 520 - 2 09

- **Series** — 325
- **Total Number of Contacts** — 122
- **Contact Code** — 520
- **Contact Rows** — 2
- **Mounting Options** — 09

Series 325

Total Number of Contacts [1]	Contact Rows
005, 006,...061	Single Row
010, 012,...122	Dual Row

Contact Code	Description & Tail Size	Tail Length "G"
500	Wire Hole .050 x .025 (1.27 x 0.64)	.260 (6.60)
520	P.C. Tail .025 Square (0.64 Square)	.175 (4.45)
540	Wire Wrap .025 Square (0.64 Square)	.560(14.22)

Contact Rows	Description
1	Single Row
2	Dual Row

Mounting Options [2]	Description
01	No Mounting Lugs
07	M3-0.5 Metric Threaded Inserts
08	#4-40 Unified Threaded Inserts
09	.160 (4.06) Dia. Mounting Holes

Ordering Code Notes

1) All connector sizes up to 61 contacts single row / 122 contacts dual row are available upon request.
2) For details of the mounting options, refer to page 63.

FEATURES

- .100 (2.54) Contact Spacing x .300 (7.62) Row Spacing
- Accepts .125 (3.18) Nominal Thickness P.C. Board
- High Profile Insulator Body, .600 (15.24)
- Contact Termination Options include P.C. Tail, Wire Hole & .025 (0.64) Square Wire Wrap
- Single or Dual Row Configurations
- Variety of Mounting Options
- Accepts In-Contact Polarizing Keys
- Automatic Wire Wrap Positioning Holes

SPECIFICATIONS

- Insulator Material: Polyphenylene Sulphide, UL 94V-0, Colour: Green
- Contact Material: Copper, Nickel, Tin Alloy CA-725
- Contact Plating: Gold on the Mating Area, Tin on the Contact Tails, Nickel Underplate
- Current Rating: 3 Amperes Continuous
- Contact Resistance: 10 Milliohms Maximum
- Dielectric Withstanding Voltage: 1200 V AC rms at Sea Level Between Adjacent Contacts
- Insulation Resistance: 5000 Megohms Minimum
- Operating Temperature: -65 to +125 Degrees C
- Insertion Force: 16 oz (4.45 N) Maximum per Contact Pair when Tested with a .135 (3.43) Thick Gauge
- Withdrawal Force: 1 oz (0.28 N) Minimum per Contact Pair when Tested with a .115 (2.92) Thick Gauge

Downloaded from Elcodis.com electronic components distributor

CARD EDGE CONNECTOR SERIES 325

ccepts .125" (3.18mm) Thick Board, Contact Spacing .100" (2.54mm)

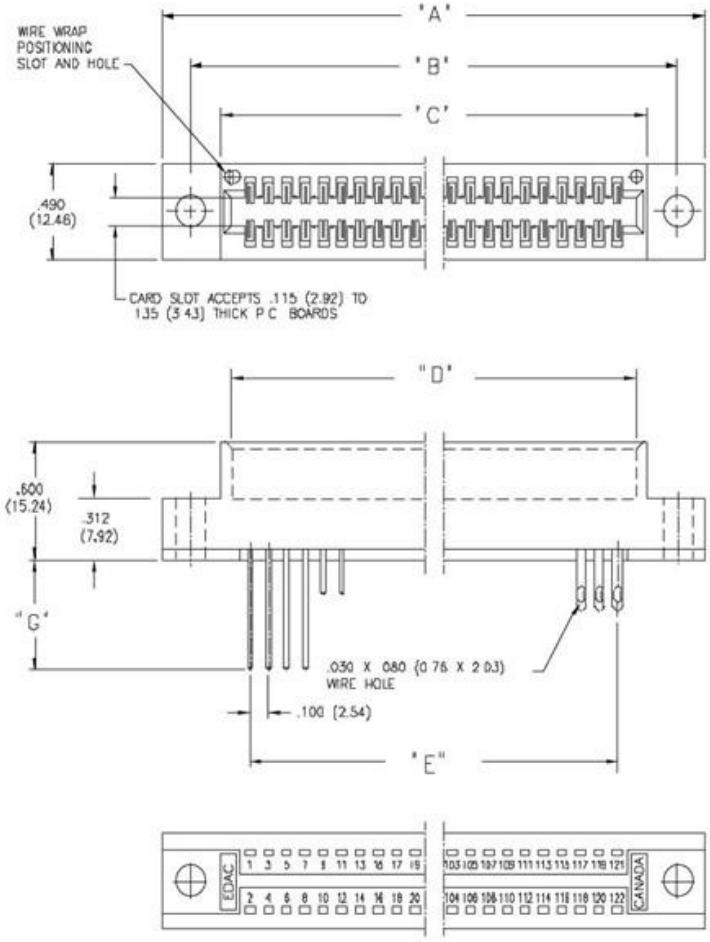

SECTION THROUGH CONTACT POSITION

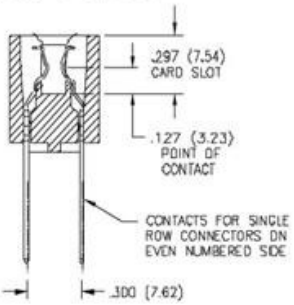

IN-CONTACT POLARIZING KEY

P/N 325-240-328

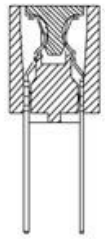

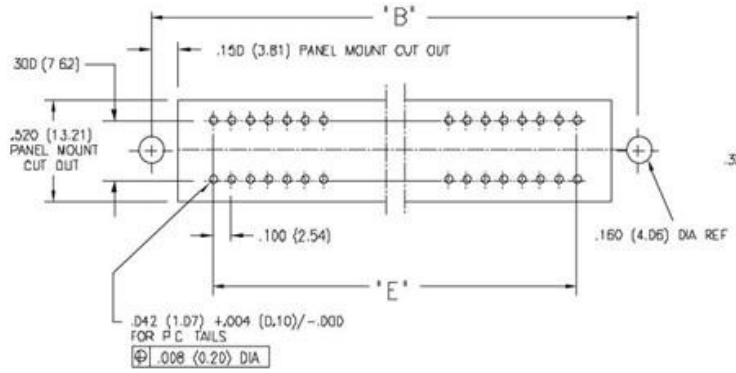

CONNECTOR MOUNTING PATTERN

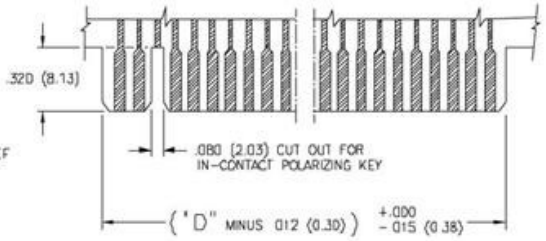

RECOMMENDED DAUGHTER BOARD

NUMBER OF CONTACTS		"A"		"B"		"C"		"D"		"E"	
Single	Dual	Inch	(mm)	Inch	(mm)	Inch	(mm)	Inch	(mm)	Inch	(mm)
5	10	1.355	(34.42)	1.056	(26.82)	.722	(18.34)	.600	(15.24)	.400	(10.16)
15	30	2.355	(59.82)	2.056	(52.22)	1.722	(43.74)	1.600	(40.64)	1.400	(35.56)
18	36	2.655	(67.44)	2.356	(59.84)	2.022	(51.36)	1.900	(48.26)	1.700	(43.18)
22	44	3.055	(77.60)	2.756	(70.00)	2.422	(61.52)	2.300	(58.42)	2.100	(53.34)
25	50	3.355	(85.22)	3.056	(77.62)	2.722	(69.14)	2.600	(66.04)	2.400	(60.96)
30	60	3.855	(97.92)	3.556	(90.32)	3.222	(81.84)	3.100	(78.74)	2.900	(73.66)
36	72	4.455	(113.16)	4.156	(105.56)	3.822	(97.08)	3.700	(93.98)	3.500	(88.90)
40	80	4.855	(123.32)	4.556	(115.72)	4.222	(107.24)	4.100	(104.14)	3.900	(99.06)
43	86	5.155	(130.94)	4.856	(123.34)	4.522	(114.86)	4.400	(111.76)	4.200	(106.68)
50	100	5.855	(148.72)	5.556	(141.12)	5.222	(132.64)	5.100	(129.54)	4.900	(124.46)
61	122	6.955	(176.66)	6.656	(169.06)	6.322	(160.58)	6.200	(157.48)	6.000	(152.40)

Dimensions of Other Connector Sizes are Listed

Downloaded from Elcodis.com electronic components distributor

339/389 SERIES CARD EDGE CONNECTOR

.100" (2.54mm) Contact Spacing (Bellows Contacts)

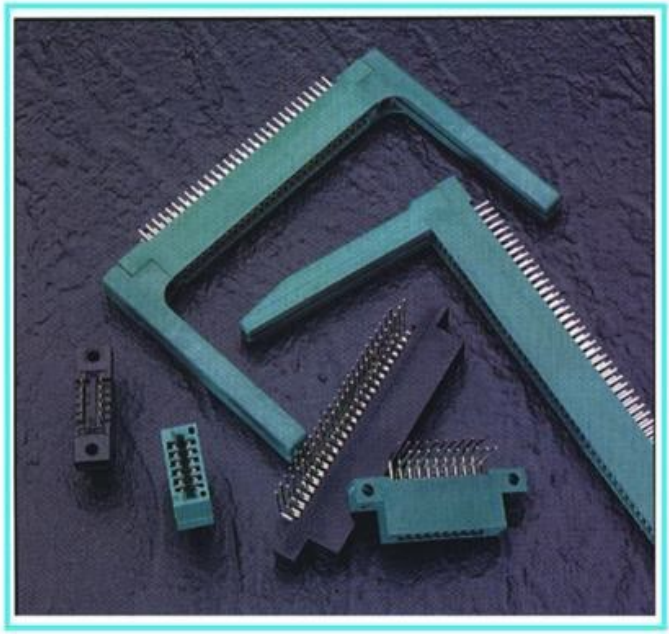

FEATURES

- CSA Approved and UL Recognized
- .100 (2.54) Contact Spacing x .200 (5.08) Row Spacing
- Accepts .062 (1.57) Nominal Thickness P.C. Board
- High Profile Insulator Body, .600 (15.24)
- Contact Termination Options include P.C. Tail, Wire Wrap, 90 Degree & Extender Board Bends
- Round P.C. Tails available to fit .036 (.091) diameter holes
- Single or Dual Row Configurations
- Large Variety of Mounting Options, Flush or Offset Lugs
- Pre-assembled Card Guides Available
- Accepts Between Contact and In-Contact Polarizing Keys
- Automatic Wire Wrap Positioning Holes

SPECIFICATIONS

- Insulator Material: Thermoplastic Polyester, UL 94V-0
- Contact Material: Ph. Bronze
- Contact Plating: Gold on the Mating Area, Tin-Lead on the Contact Tails, Nickel Underplate
- Current Rating: 3 Amperes Continuous
- Contact Resistance: 10 Milliohms Maximum
- Dielectric Withstanding Voltage: 1200 V AC rms at Sea Level Between Adjacent Contacts
- Insulation Resistance: 5000 Megohms Minimum
- Operating Temperature: -65 to +105 Degrees C
- Insertion Force: 16 oz (4.45 N) Maximum per Contact Pair when Tested with a .070 (1.78) Thick Gauge
- Withdrawal Force: 1 oz (0.28 N) Minimum per Contact Pair when Tested with a .054 (1.37) Thick Gauge

339/389 SERIES ORDERING CODE

Example Part Number 339 - 050 - 520 - 2 02

- Series — 339
- Total Number of Contacts — 050
- Contact Code — 520
- Contact Rows and Insulator Style — 2
- Mounting Options — 02

Series Insulator Colour	
339	Green
389	Black

Total Number of Contacts [1]	Contact Rows
005, 006,...072	Single Row
010, 012,...144	Dual Row

Contact Code [2,3]	Description & Tail Size		Tail Length "G"	
521	P.C. Tail	.025 Square (0.64 Square)	.150	(3.81)
523	P.C. Tail	.025 Square (0.64 Square)	.186	(4.72)
524	P.C. Tail	.025 Square (0.64 Square)	.376	(9.55)
540	Wire Wrap	.025 Square (0.64 Square)	.539	(13.69)
541	Wire Wrap	.025 Square (0.64 Square)	.556	(14.12)
556	Extender Board Bend			
558	90 Degree Bend			
559	90 Degree Bend			
560	Extender Board Bend			

Contact Rows and Insulator Style	Description
1	Single Row, Flush Mounting Lugs
2	Dual Row, Flush Mounting Lugs
4	Single Row, .110 (2.79) Offset Lugs
5	Dual Row, .110 (2.79) Offset Lugs
6	Single Row, .170 (4.32) Offset Lugs
8	Dual Row, .170 (4.32) Offset Lugs

Mounting Options [4,5]	Description
01	No Mounting Lugs
02	.128 (3.25) Dia. Mounting Holes
03	.116 (2.95) I.D. Floating Eyelets
04	.156 (3.96) Dia. Mounting Holes
07	M3-0.5 Metric Threaded Inserts
08	#4-40 Unified Threaded Inserts
12	.128 (3.25) Dia. Side Mounting Holes
58	.468 (11.89) Offset Card Guides
78	In-line Card Guides 2.750 (69.85) Long
88	In-Line Card Guides 1.250 (31.75) Long

Ordering Code Notes

1) All connector sizes up to 72 contacts single row / 144 contacts dual row are available upon request.
2) For details of the extender board and 90 degree bends, refer to page 61.
3) For lugless connectors, code 01 mounting, specify contact row codes 1 or 2.
4) For details of the mounting options, refer to page 63.

Downloaded from Elcodis.com electronic components distributor

CARD EDGE CONNECTOR SERIES 339/389

Contact Spacing .100" (2.54mm) (Bellows Contacts)

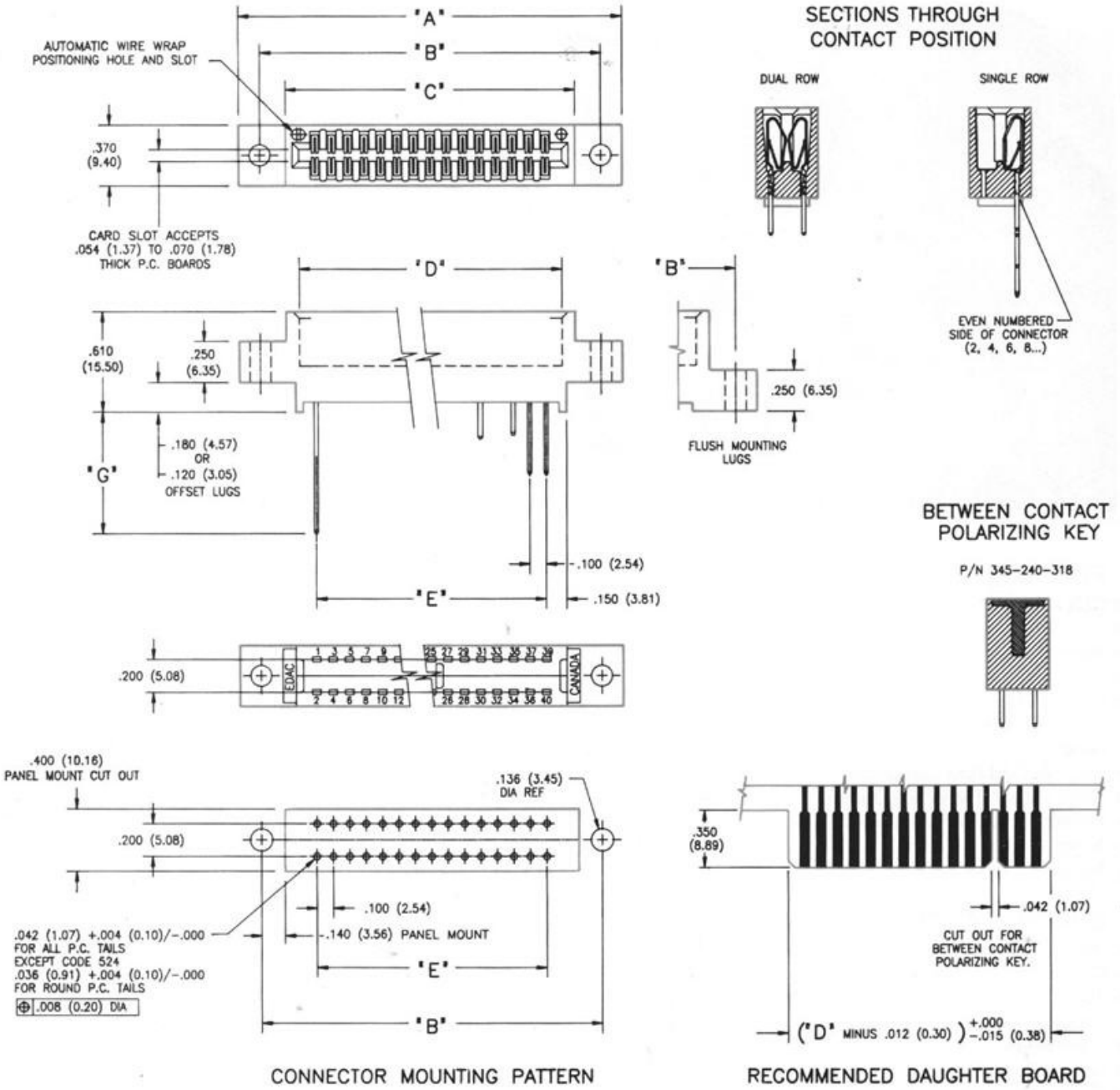

CONNECTOR MOUNTING PATTERN

RECOMMENDED DAUGHTER BOARD

NUMBER OF CONTACTS Single	Dual	"A" Inch	(mm)	"B" Inch	(mm)	"C" Inch	(mm)	"D" Inch	(mm)	"E" Inch	(mm)
5	10	1.335	(33.91)	1.075	(27.31)	.760	(19.30)	.600	(15.24)	.400	(10.16)
10	20	1.835	(46.61)	1.575	(40.01)	1.260	(32.00)	1.100	(27.94)	.900	(22.86)
13	26	2.135	(54.23)	1.875	(47.63)	1.560	(39.62)	1.400	(35.56)	1.200	(30.48)
15	30	2.335	(59.31)	2.075	(52.71)	1.760	(44.70)	1.600	(40.64)	1.400	(35.56)
18	36	2.635	(66.93)	2.375	(60.33)	2.060	(52.32)	1.900	(48.26)	1.700	(43.18)
22	44	3.035	(77.09)	2.775	(70.49)	2.460	(62.48)	2.300	(58.42)	2.100	(53.34)
25	50	3.335	(84.71)	3.075	(78.11)	2.760	(70.10)	2.600	(66.04)	2.400	(60.96)
30	60	3.835	(97.41)	3.575	(90.81)	3.260	(82.80)	3.100	(78.74)	2.900	(73.66)
31	62	3.935	(99.95)	3.675	(93.35)	3.360	(85.34)	3.200	(81.28)	3.000	(76.20)
36	72	4.435	(112.65)	4.175	(106.05)	3.860	(98.04)	3.700	(93.98)	3.500	(88.90)
43	86	5.135	(130.43)	4.875	(123.83)	4.560	(115.82)	4.400	(111.76)	4.200	(106.68)
50	100	5.835	(148.21)	5.575	(141.61)	5.260	(133.60)	5.100	(129.54)	4.900	(124.46)
60	120	6.835	(173.61)	6.575	(167.01)	6.260	(159.00)	6.100	(154.94)	5.900	(149.86)
72	144	8.035	(204.09)	7.775	(197.49)	7.460	(189.48)	7.300	(185.42)	7.100	(180.34)

Dimensions of Other Connector Sizes are Listed

Downloaded from Elcodis.com electronic components distributor

346/396 SERIES CARD EDGE CONNECTOR

.125" (3.18mm) Contact Spacing

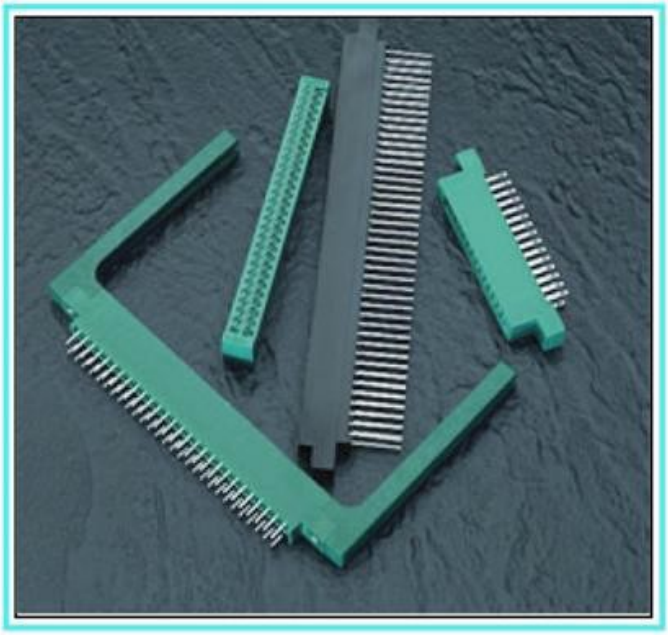

FEATURES

- CSA Approved and UL Recognized
- .125 (3.18) Contact Spacing x .250 (6.35) Row Spacing
- Accepts .062 (1.57) Nominal Thickness P.C. Board
- High Profile Insulator Body, .600 (15.24)
- Contact Termination Options include P.C. Tail, Wire Hole, .025 (0.64) Square Wire Wrap, 90 Degree & Extender Board Bends
- Single or Dual Row Configurations
- Large Variety of Mounting Options, Flush or Offset Lugs
- Pre-assembled Card Guides Available
- Accepts Between Contact and In-Contact Polarizing Keys
- Automatic Wire Wrap Positioning Holes

SPECIFICATIONS

- Insulator Material: Thermoplastic Polyester, UL 94V-0
- Contact Material: Copper, Nickel, Tin Alloy CA-725
- Contact Plating: Gold on the Mating Area, Tin on the Contact Tails, Nickel Underplate
- Current Rating: 3 Amperes Continuous
- Contact Resistance: 10 Milliohms Maximum
- Dielectric Withstanding Voltage: 1500 V AC rms at Sea Level Between Adjacent Contacts
- Insulation Resistance: 5000 Megohms Minimum
- Operating Temperature: -65 to +105 Degrees C
- Insertion Force: 16 oz (4.45 N) Maximum per Contact Pair when Tested with a .070 (1.78) Thick Gauge
- Withdrawal Force: 1 oz (0.28 N) Minimum per Contact Pair when Tested with a .054 (1.37) Thick Gauge

346/396 SERIES ORDERING CODE

Example Part Number 346 - 056 - 540 - 8 02

- **Series** — 346
- **Total Number of Contacts** — 056
- **Contact Code** — 540
- **Contact Rows and Insulator Style** — 8
- **Mounting Options** — 02

Series	Insulator Colour
346	Green
396	Black

Total Number of Contacts [1]	Contact Rows
005, 006,...050	Single Row
010, 012,...100	Dual Row

Contact Code [2,3]	Description & Tail Size		Tail Length "G"
500	Wire Hole	.050 x .025 (1.27 x 0.64)	.260 (6.60)
520	P.C. Tail	.025 Square (0.64 Square)	.175 (4.45)
521	P.C. Tail	.025 Square (0.64 Square)	.150 (3.81)
522	P.C. Tail	.025 Square (0.64 Square)	.440(11.18)
526	P.C. Tail	.025 Square (0.64 Square)	.350 (8.89)
540	Wire Wrap	.025 Square (0.64 Square)	.560(14.22)
541	Wire Wrap	.025 Square (0.64 Square)	.750(19.05)
555	Extender Board Bend (Code 500 Contacts)		
556	Extender Board Bend (Code 520 Contacts)		
558	90 Degree Bend (Code 541 Contacts)		
559	90 Degree Bend (Code 541 Contacts)		
560	Extender Board Bend (Code 526 Contacts)		

Contact Rows and Insulator Style [4]	Description
1	Single Row, Flush Mounting Lugs
2	Dual Row, Flush Mounting Lugs
6	Single Row, .170 (4.32) Offset Lugs
8	Dual Row, .170 (4.32) Offset Lugs

Mounting Options [5,6,7]	Description
01	No Mounting Lugs
02	.128 (3.25) Dia. Mounting Holes
03	.116 (2.95) I.D. Floating Eyelets
04	.156 (3.96) Dia. Mounting Holes
07	M3-0.5 Metric Threaded Inserts
08	#4-40 Unified Threaded Inserts
12	.128 (3.25) Dia. Side Mounting Holes
58	.468 (11.89) Offset Card Guides
78	In-Line Card Guides

Ordering Code Notes

1) All connector sizes up to 50 contacts single row / 100 contacts dual row are available upon request.
2) The 500 contact code is only available in the 346 series. Green polyphenylene sulphide insulator material will be supplied.
3) For details of the extender board and 90 degree bends, refer to page 61.
4) Consult with Edac regarding connectors with a .420 (10.67) card slot depth.
5) For lugless connectors, code 01 mounting, specify contact row codes 1 or 2.
6) In-line card guides are only available with offset mounting lugs.
7) For details of the mounting options, refer to page 63.

Downloaded from Elcodis.com electronic components distributor

CARD EDGE CONNECTOR SERIES 346/396

Contact Spacing .125" (3.18mm)

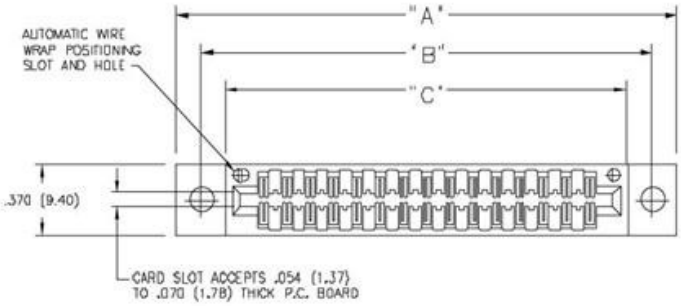

SECTIONS THROUGH CONTACT POSITION

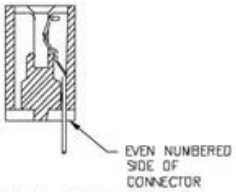

SINGLE ROW

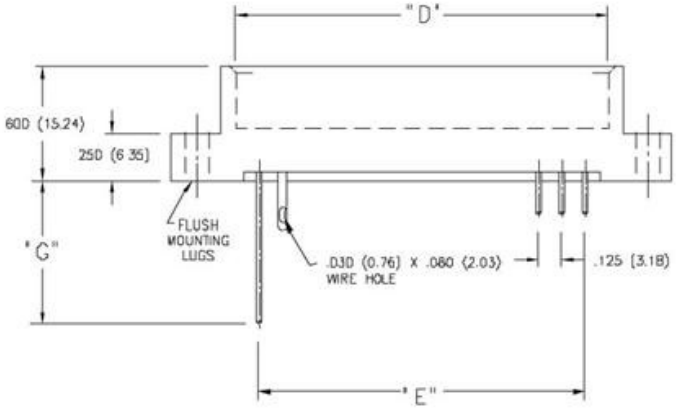

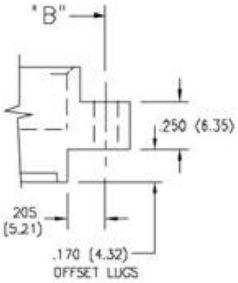

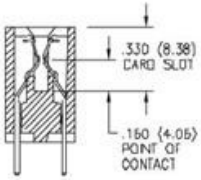

DUAL ROW

IN-CONTACT POLARIZING KEY

P/N 345-240-328

BETWEEN CONTACT POLARIZING KEY

P/N 305-240-318

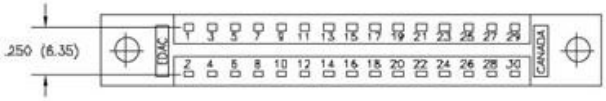

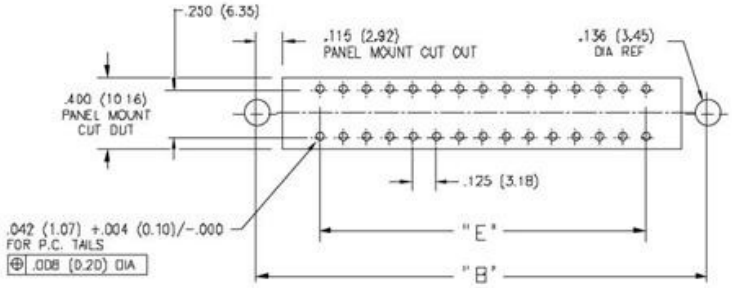

CONNECTOR MOUNTING PATTERN

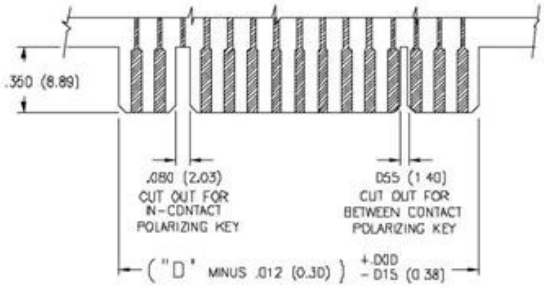

RECOMMENDED DAUGHTER BOARD

NUMBER OF CONTACTS		"A"		"B"		"C"		"D"		"E"	
Single	Dual	Inch	(mm)	Inch	(mm)	Inch	(mm)	Inch	(mm)	Inch	(mm)
5	10	1.435	(36.45)	1.170	(29.72)	.910	(23.11)	.750	(19.05)	.500	(12.70)
6	12	1.560	(39.62)	1.295	(32.89)	1.035	(26.29)	.875	(22.23)	.625	(15.88)
10	20	2.060	(52.32)	1.795	(45.59)	1.535	(38.99)	1.375	(34.93)	1.125	(28.58)
15	30	2.685	(68.20)	2.420	(61.47)	2.160	(54.86)	2.000	(50.80)	1.750	(44.45)
18	36	3.060	(77.72)	2.795	(70.99)	2.535	(64.39)	2.375	(60.33)	2.125	(53.98)
22	44	3.560	(90.42)	3.295	(83.69)	3.035	(77.09)	2.875	(73.03)	2.625	(66.68)
25	50	3.935	(99.95)	3.670	(93.22)	3.410	(86.61)	3.250	(82.55)	3.000	(76.20)
30	60	4.560	(115.82)	4.295	(109.09)	4.035	(102.49)	3.875	(98.43)	3.625	(92.08)
31	62	4.685	(119.00)	4.420	(112.27)	4.160	(105.66)	4.000	(101.60)	3.750	(95.25)
35	70	5.185	(131.70)	4.920	(124.97)	4.660	(118.36)	4.500	(114.30)	4.250	(107.95)
36	72	5.310	(134.87)	5.045	(128.14)	4.785	(121.54)	4.625	(117.48)	4.375	(111.13)
40	80	5.810	(147.57)	5.545	(140.84)	5.285	(134.24)	5.125	(130.18)	4.875	(123.83)
43	86	6.185	(157.10)	5.920	(150.37)	5.660	(143.76)	5.500	(139.70)	5.250	(133.35)
50	100	7.060	(179.32)	6.795	(172.59)	6.535	(165.99)	6.375	(161.93)	6.125	(155.58)

Dimensions of Other Connector Sizes are Listed

Downloaded from Elcodis.com electronic components distributor

305/315/355 SERIES CARD EDGE CONNECTOR

.156" (3.96mm) Contact Spacing

FEATURES

- 305/355 Series CSA Approved and UL Recognized
- 315 Series UL Recognized
- .156 (3.96) Contact Spacing x .140 (3.56) Row Spacing
- Accepts .062 (1.57) Nominal Thickness P.C. Board
- Low Profile Insulator Body, .460 (11.68)
- Contact Termination Options include P.C. Tail, Wire Hole & Extender Board Bends
- Large Variety of Mounting Options
- Pre-assembled Card Guides Available
- Accepts Between Contact and In-Contact Polarizing Keys

SPECIFICATIONS

- Insulator Material: Thermoplastic Polyester, UL 94V-0
- Contact Material: Copper, Nickel, Tin Alloy CA-725
- Contact Plating: Gold on the Mating Area, Tin on the Contact Tails, Nickel Underplate
- Current Rating: 5 Amperes Continuous
- Contact Resistance: 10 Milliohms Maximum
- Dielectric Withstanding Voltage: 1800 V AC rms at Sea Level Between Adjacent Contacts
- Insulation Resistance: 5000 Megohms Minimum
- Operating Temperature: -65 to +105 Degrees C
- Insertion Force: 16 oz (4.45 N) Maximum per Contact Pair when Tested with a .070 (1.78) Thick Gauge
- Withdrawal Force: 1 oz (0.28 N) Minimum per Contact Pair when Tested with a .054 (1.37) Thick Gauge

305/315/355 SERIES ORDERING CODE

Example Part Number 305 - 056 - 521 - 2 04

- Series
- Total Number of Contacts
- Contact Code
- Insulator Style
- Mounting Options

Series	Insulator Colour	Card Slot Length
305	Green	Standard Length per MIL-C-21097
315	Green	.020 (0.51) Shorter than Standard
355	Black	Standard Length per MIL-C-21097

Total Number of Contacts [1]	Contact Rows
012, 014,...086	Dual Row

Contact Code [2, 3]	Description & Tail Size	Tail Length "G"
500	Wire Hole.087 x .013 (2.21 x 0.33)	.282 (7.16)
520	P.C. Tail .046 x .013 (1.17 x 0.33)	.213 (5.41)
521	P.C. Tail .046 x .013 (1.17 x 0.33)	.125 (3.18)
555	Extender Board Bend (Code 500 Contacts)	
556	Extender Board Bend (Code 520 Contacts)	

Insulator Style [4]	Description
2	.295 (7.49) Card Slot Depth
5	.330 (8.38) Card Slot Depth

Mounting Options [5]	Description
01	No Mounting Lugs
02	.128 (3.25) Dia. Mounting Holes
03	.116 (2.95) I.D. Floating Eyelets
04	.156 (3.96) Dia. Mounting Holes
07	M3-0.5 Metric Threaded Inserts
08	#4-40 Unified Threaded Inserts
58	.468 (11.89) Offset Card Guides
68	.344 (8.74) Offset Card Guides
78	In-Line Card Guides

Ordering Code Notes

1) All connector sizes up to 86 contacts dual row are available upon request.
2) Consult with Edac regarding single row configuration and wire wrap tail options.
3) For details of the extender board bends, refer to page 61.
4) Insulator style code 5 is available for the 305 and 355 series upon request.
5) For details of the mounting options, refer to page 63.

Downloaded from Elcodis.com electronic components distributor

CARD EDGE CONNECTOR SERIES 305/315/355

Contact Spacing .156" (3.96mm)

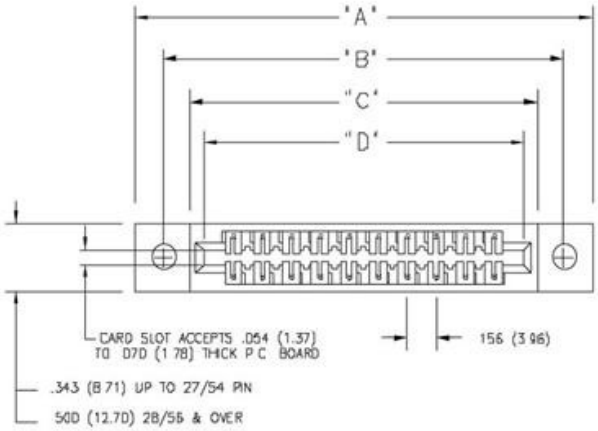

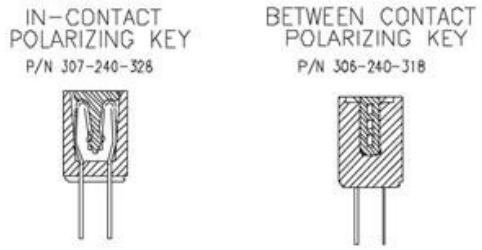

SECTIONS THROUGH CONTACT POSITION

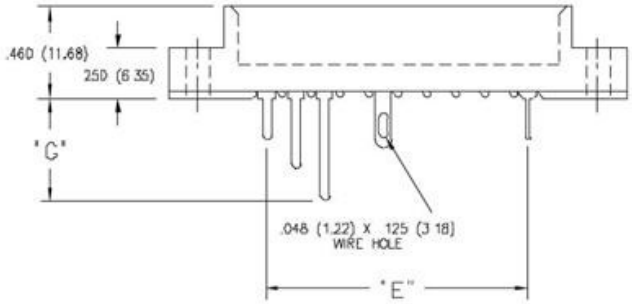

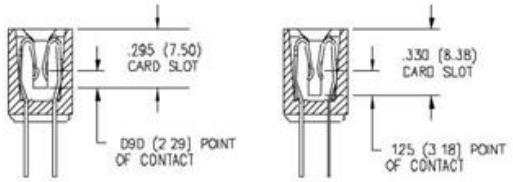

INSULATOR STYLE CODE 2

INSULATOR STYLE CODE 5

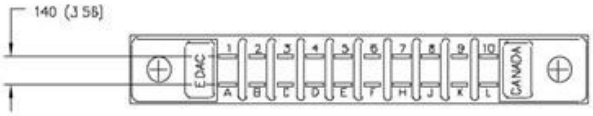

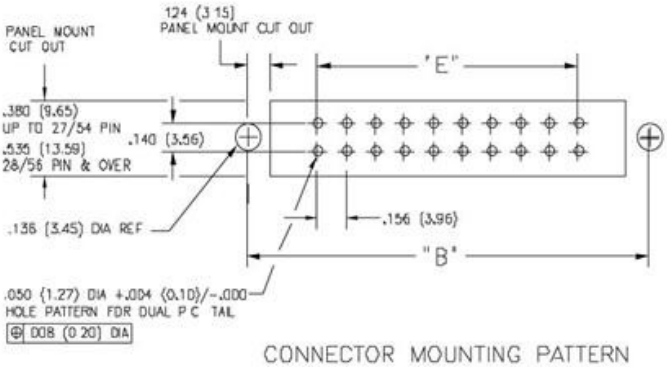

CONNECTOR MOUNTING PATTERN

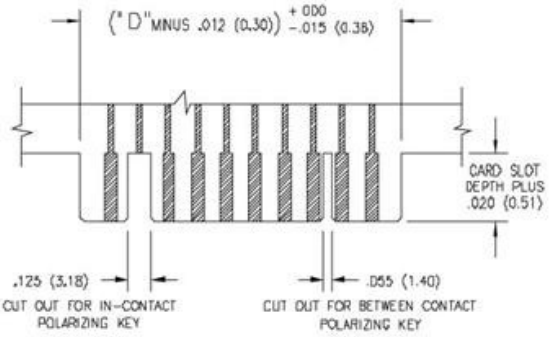

RECOMMENDED DAUGHTER BOARD

NUMBER OF CONTACTS	"A"		"B"		"C"		"D"				"E"	
							305, 355		315			
Dual	Inch	(mm)	Inch	(mm)	Inch	(mm)	Inch	(mm)	Inch	(mm)	Inch	(mm)
12	1.842	(46.79)	1.532	(38.91)	1.246	(31.65)	1.100	(27.94)	1.080	(27.43)	.780	(19.81)
20	2.466	(62.64)	2.156	(54.76)	1.870	(47.50)	1.724	(43.79)	1.704	(43.28)	1.404	(35.66)
24	2.778	(70.56)	2.468	(62.69)	2.182	(55.42)	2.036	(51.71)	2.016	(51.21)	1.716	(43.59)
30	3.246	(82.45)	2.936	(74.57)	2.650	(67.31)	2.504	(63.60)	2.484	(63.09)	2.184	(55.47)
36	3.714	(94.34)	3.404	(86.46)	3.118	(79.20)	2.972	(75.49)	2.952	(74.98)	2.652	(67.36)
44	4.338	(110.19)	4.028	(102.31)	3.742	(95.05)	3.596	(91.34)	3.576	(90.83)	3.276	(83.21)
48	4.650	(118.11)	4.340	(110.24)	4.054	(102.97)	3.908	(99.26)	3.888	(98.76)	3.588	(91.14)
50	4.806	(122.07)	4.496	(114.20)	4.210	(106.93)	4.064	(103.23)	4.044	(102.72)	3.744	(95.10)
56	5.274	(133.96)	4.964	(126.09)	4.678	(118.82)	4.532	(115.11)	4.512	(114.60)	4.212	(106.98)
60	5.586	(141.88)	5.276	(134.01)	4.990	(126.75)	4.844	(123.04)	4.824	(122.53)	4.524	(114.91)
72	6.522	(165.66)	6.212	(157.78)	5.926	(150.52)	5.780	(146.81)	5.760	(146.30)	5.460	(138.68)
86	7.614	(193.40)	7.304	(185.52)	7.018	(178.26)	6.872	(174.55)	6.852	(174.04)	6.552	(166.42)

Dimensions of Other Connector Sizes are Listed

Downloaded from Elcodis.com electronic components distributor

306/316/356 SERIES CARD EDGE CONNECTOR

.156" (3.96mm) Contact Spacing

306/316/356 SERIES ORDERING CODE

Example Part Number 306 - 022 - 521 - 178

- **Series** — 306
- **Total Number of Contacts** — 022
- **Contact Code** — 521
- **Mounting Options** — 178

Series	Insulator Colour	Card Slot Length
306	Green	Standard Length per MIL-C-21097
316	Green	.020 (0.51) Shorter than Standard
356	Black	Standard Length per MIL-C-21097

Total Number of Contacts [1]	Contact Row
006, 007,...043	Centre Row

Contact Code [2]	Description & Tail Size	Tail Length "G"
500	Wire Hole.087 x .015 (2.21 x 0.38)	.282 (7.16)
520	P.C. Tail .046 x .015 (1.17 x 0.38)	.213 (5.41)
521	P.C. Tail .037 x .015 (0.94 x 0.38)	.125 (3.18)

Mounting Options [3]	Description
101	No Mounting Lugs
102	.128 (3.25) Dia. Mounting Holes
103	.116 (2.95) I.D. Floating Eyelets
104	.156 (3.96) Dia. Mounting Holes
107	M3-0.5 Metric Threaded Inserts
108	#4-40 Unified Threaded Inserts
158	.468 (11.89) Offset Card Guides
168	.344 (8.74) Offset Card Guides
178	In-Line Card Guides

Ordering Code Notes

1) All connector sizes up to 43 contacts centre row are available upon request.
2) For contacts with overall tin plating, change the first digit of the contact code from 5 to 4.
3) For details of the mounting options, refer to page 63.

FEATURES

- 306/356 Series CSA Approved and UL Recognized
- 316 Series UL Recognized
- .156 (3.96) Contact Spacing with Single Centreline Row
- Accepts .062 (1.57) Nominal Thickness P.C. Board
- Low Profile Insulator Body, .460 (11.68)
- Contact Termination Options include P.C. Tail & Wire Hole
- Large Variety of Mounting Options
- Pre-assembled Card Guides Available
- Accepts Between Contact and In-Contact Polarizing Keys

SPECIFICATIONS

- Insulator Material: Thermoplastic Polyester, UL 94V-0
- Contact Material: Copper, Nickel, Tin Alloy CA-725
- Contact Plating: Gold on the Mating Area, Tin on the Contact Tails, Nickel Underplate
- Current Rating: 5 Amperes Continuous
- Contact Resistance: 10 Milliohms Maximum
- Dielectric Withstanding Voltage: 1800 V AC rms at Sea Level Between Adjacent Contacts
- Insulation Resistance: 5000 Megohms Minimum
- Operating Temperature: -65 to +105 Degrees C
- Insertion Force: 16 oz (4.45 N) Maximum per Contact when Tested with a .070 (1.78) Thick Gauge
- Withdrawal Force: 1 oz (0.28 N) Minimum per Contact when Tested with a .054 (1.37) Thick Gauge

Downloaded from Elcodis.com electronic components distributor

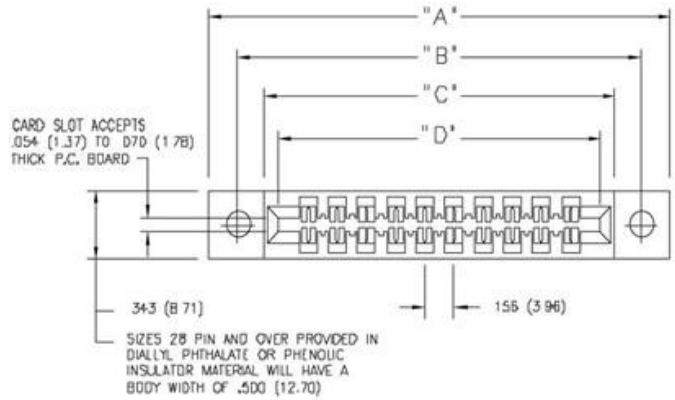

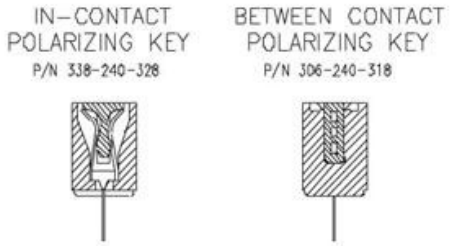

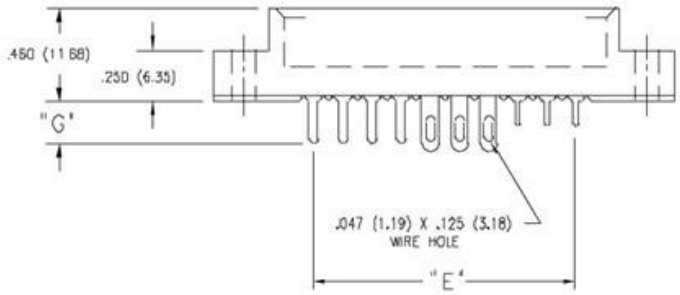

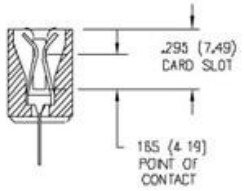

SECTION THROUGH CONTACT POSITION

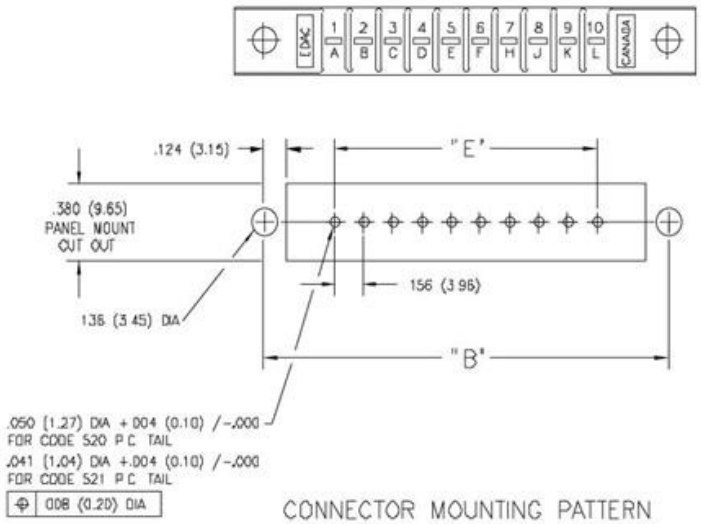

CONNECTOR MOUNTING PATTERN

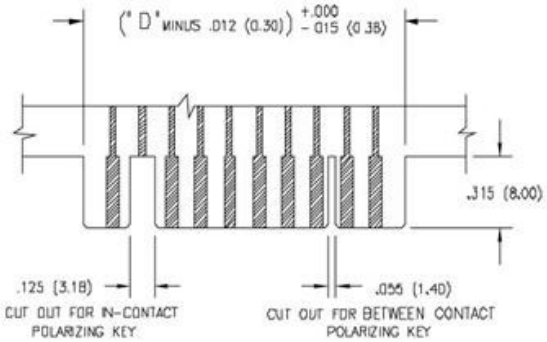

RECOMMENDED DAUGHTER BOARD

NUMBER OF CONTACTS	"A"		"B"		"C"		"D"				"E"	
							306, 356		316			
Single	Inch	(mm)	Inch	(mm)	Inch	(mm)	Inch	(mm)	Inch	(mm)	Inch	(mm)
6	1.842	(46.79)	1.532	(38.91)	1.246	(31.65)	1.100	(27.94)	1.080	(27.43)	.780	(19.81)
8	2.154	(54.71)	1.844	(46.84)	1.558	(39.57)	1.412	(35.86)	1.392	(35.36)	1.092	(27.74)
10	2.466	(62.64)	2.156	(54.76)	1.870	(47.50)	1.724	(43.79)	1.704	(43.28)	1.404	(35.66)
12	2.778	(70.56)	2.468	(62.69)	2.182	(55.42)	2.036	(51.71)	2.016	(51.21)	1.716	(43.59)
15	3.246	(82.45)	2.936	(74.57)	2.650	(67.31)	2.504	(63.60)	2.484	(63.09)	2.184	(55.47)
18	3.714	(94.34)	3.404	(86.46)	3.118	(79.20)	2.972	(75.49)	2.952	(74.98)	2.652	(67.36)
22	4.338	(110.19)	4.028	(102.31)	3.742	(95.05)	3.596	(91.34)	3.576	(90.83)	3.276	(83.21)
25	4.806	(122.07)	4.496	(114.20)	4.210	(106.93)	4.064	(103.23)	4.044	(102.72)	3.744	(95.10)
28	5.274	(133.96)	4.964	(126.09)	4.678	(118.82)	4.532	(115.11)	4.512	(114.60)	4.212	(106.98)
30	5.586	(141.88)	5.276	(134.01)	4.990	(126.75)	4.844	(123.04)	4.824	(122.53)	4.524	(114.91)
36	6.522	(165.66)	6.212	(157.78)	5.926	(150.52)	5.780	(146.81)	5.760	(146.30)	5.460	(138.68)
40	7.146	(181.51)	6.836	(173.63)	6.550	(166.37)	6.404	(162.66)	6.384	(162.15)	6.084	(154.53)
43	7.614	(193.40)	7.304	(185.52)	7.018	(178.26)	6.872	(174.55)	6.852	(174.04)	6.552	(166.42)

Dimensions of Other Connector Sizes are Listed

Downloaded from Elcodis.com electronic components distributor

307/357 SERIES CARD EDGE CONNECTOR

.156" (3.96mm) Contact Spacing

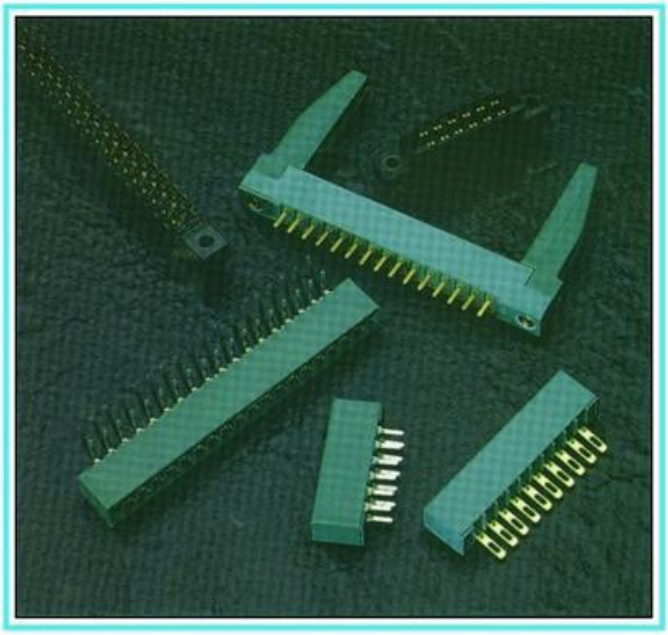

FEATURES

- CSA Approved and UL Recognized
- .156 (3.96) Contact Spacing x .200 (5.08) Row Spacing
- Accepts .062 (1.57) Nominal Thickness P.C. Board
- Low Profile Insulator Body, .460 (11.68)
- Contact Termination Options include P.C. Tail, Wire Hole, Wire Wrap, 90 Degree & Extender Board Bends
- Single or Dual Row Configurations
- Large Variety of Mounting Options
- Pre-assembled Card Guides Available
- Accepts Between Contact and In-Contact Polarizing Keys

SPECIFICATIONS

- Insulator Material: Thermoplastic Polyester, UL 94V-0
- Contact Material: Copper, Nickel, Tin Alloy CA-725
- Contact Plating: Gold on the Mating Area, Tin on the Contact Tails, Nickel Underplate
- Current Rating: 5 Amperes Continuous
- Contact Resistance: 10 Milliohms Maximum
- Dielectric Withstanding Voltage: 1800 V AC rms at Sea Level Between Adjacent Contacts
- Insulation Resistance: 5000 Megohms Minimum
- Operating Temperature: -65 to +105 Degrees C
- Insertion Force: 16 oz (4.45 N) Maximum per Contact Pair when Tested with a .070 (1.78) Thick Gauge
- Withdrawal Force: 1 oz (0.28 N) Minimum per Contact Pair when Tested with a .054 (1.37) Thick Gauge

Ordering Code Notes

1) All connector sizes up to 44 contacts single row / 88 contacts dual row are available upon request.
2) For contacts with overall tin plating, change the first digit of the contact code from 5 to 4.
3) Single row contacts that read both sides of the daughter board are phosphor bronze CA-510 material with entire surface plated gold over nickel.
4) For details of the extender board and 90 degree bends, refer to page 61.
5) Switching contacts, assembled in specific contact positions, are available upon request.
6) For details of the mounting options, refer to page 63.

307/357 SERIES ORDERING CODE

Example Part Number 307 - 044 - 520 - 2 02

- Series
- Total Number of Contacts
- Contact Code
- Contact Rows
- Mounting Options

Series	Insulator Colour
307	Green
357	Black

Total Number of Contacts[1]	Contact Rows
006, 007,...044	Single Row
012, 014,...088	Dual Row

Contact Code [2, 3, 4, 5]	Description & Tail Size	Tail Length "G"
Single Row Contacts - Read One Side of Daughter Board		
505	Wire Hole.087 x .013 (2.21 x 0.33)	.282 (7.16)
525	P.C. Tail .046 x .013 (1.17 x 0.33)	.213 (5.41)
527	P.C. Tail .046 x .013 (1.17 x 0.33)	.358 (9.09)
531	P.C. Tail .023 x .013 (0.58 x 0.33)	.213 (5.41)
545	Wire Wrap.046 x .013 (1.17 x 0.33)	.708(17.98)
547	Wire Wrap.046 x .013 (1.17 x 0.33)	.520(13.21)
558	90 Degree Bend (Code 545 Contacts)	
559	90 Degree Bend (Code 527 Contacts)	
Single Row Contacts - Read Both Sides of Daughter Board		
501	Wire Hole.089 x .014 (2.29 x 0.36)	.213 (5.41)
521	P.C. Tail .046 x .014 (1.17 x 0.36)	.213 (5.41)
541	Wire Wrap.046 x .014 (1.17 x 0.36)	.495(12.57)
553	90 Degree Bend (Code 521 Contacts)	
554	90 Degree Bend (Code 501 Contacts)	
557	90 Degree Bend (Code 541 Contacts)	
Dual Row Contacts - Read Both Sides of Daughter Board		
500	Wire Hole.087 x .013 (2.21 x 0.33)	.282 (7.16)
520	P.C. Tail .046 x .013 (1.17 x 0.33)	.213 (5.41)
522	P.C. Tail .046 x .013 (1.17 x 0.33)	.358 (9.09)
524	P.C. Tail .023 x .013 (0.58 x 0.33)	.213 (5.41)
540	Wire Wrap.046 x .013 (1.17 x 0.33)	.708(17.98)
542	Wire Wrap.046 x .013 (1.17 x 0.33)	.520(13.21)
555	Extender Board Bend (Code 500 Contacts)	
556	Extender Board Bend (Code 520 Contacts)	
558	90 Degree Bend (Code 522 and 540 Contacts)	
559	90 Degree Bend (Code 522 and 540 Contacts)	
560	Extender Board Bend (Code 522 Contacts)	

Contact Rows	Description
1	Single Row
2	Dual Row

Mounting Options[6]	Description
01	No Mounting Lugs
02	.128 (3.25) Dia. Mounting Holes
03	.116 (2.95) I.D. Floating Eyelets
04	.156 (3.96) Dia. Mounting Holes
07	M3-0.5 Metric Threaded Inserts
08	#4-40 Unified Threaded Inserts
12	.128 (3.25) Dia. Side Mounting Holes
58	.468 (11.89) Offset Card Guides
68	.344 (8.74) Offset Card Guides
78	In-Line Card Guides

Downloaded from Elcodis.com electronic components distributor

CARD EDGE CONNECTOR SERIES 307/357

Contact Spacing .156" (3.96mm)

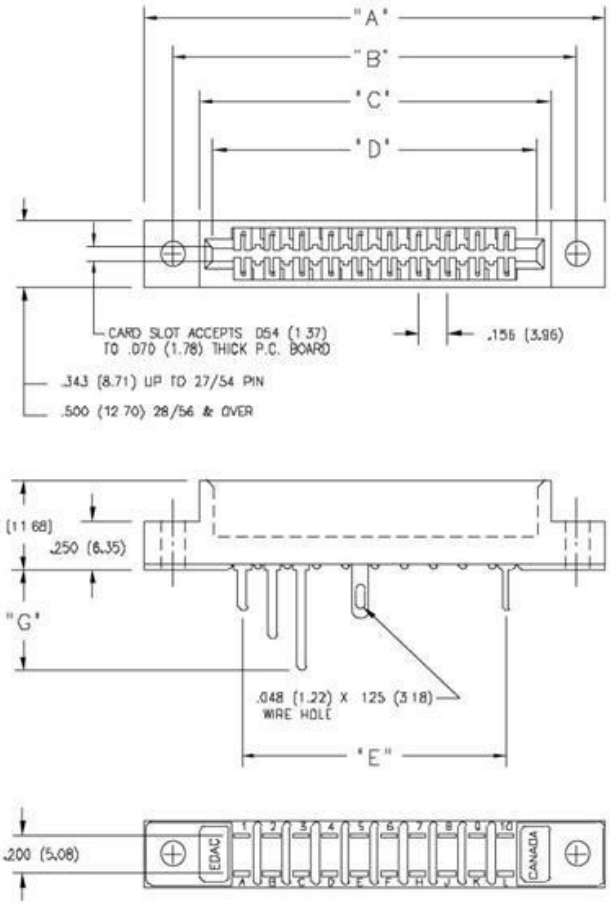

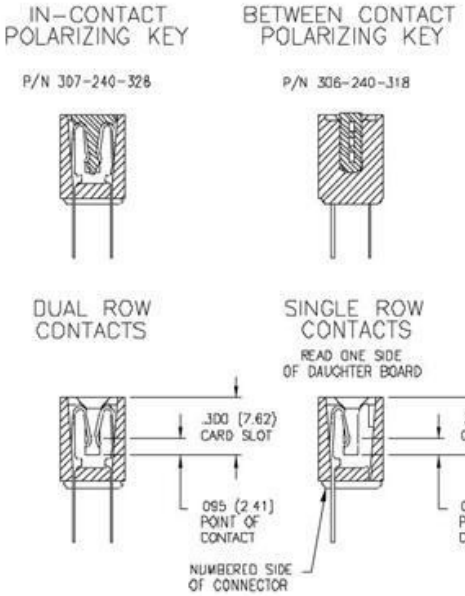

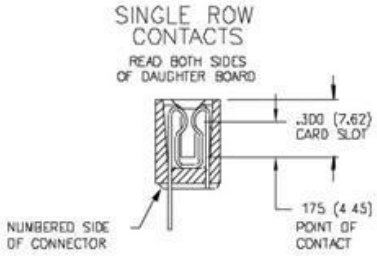

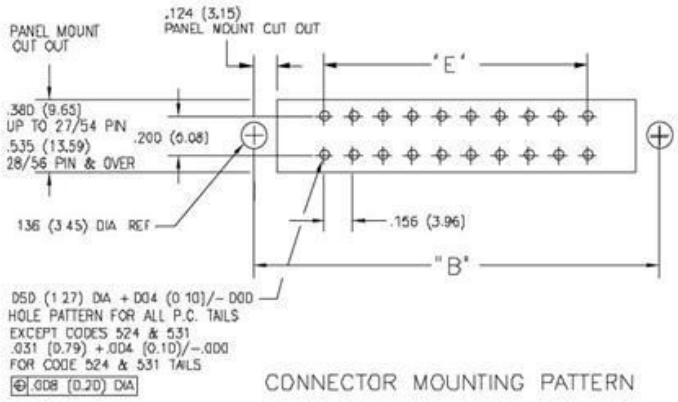

CONNECTOR MOUNTING PATTERN

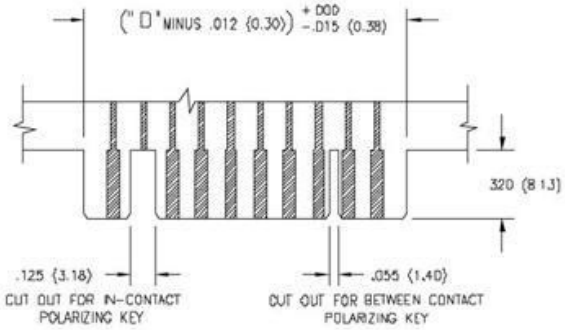

RECOMMENDED DAUGHTER BOARD

NUMBER OF CONTACTS		"A"		"B"		"C"		"D"		"E"	
Single	Dual	Inch	(mm)	Inch	(mm)	Inch	(mm)	Inch	(mm)	Inch	(mm)
6	12	1.842	(46.79)	1.532	(38.91)	1.246	(31.65)	1.100	(27.94)	.780	(19.81)
8	16	2.154	(54.71)	1.844	(46.84)	1.558	(39.57)	1.412	(35.86)	1.092	(27.74)
10	20	2.466	(62.64)	2.156	(54.76)	1.870	(47.50)	1.724	(43.79)	1.404	(35.66)
12	24	2.778	(70.56)	2.468	(62.69)	2.182	(55.42)	2.036	(51.71)	1.716	(43.59)
15	30	3.246	(82.45)	2.936	(74.57)	2.650	(67.31)	2.504	(63.60)	2.184	(55.47)
18	36	3.714	(94.34)	3.404	(86.46)	3.118	(79.20)	2.972	(75.49)	2.652	(67.36)
20	40	4.026	(102.26)	3.716	(94.39)	3.430	(87.12)	3.284	(83.41)	2.964	(75.29)
22	44	4.338	(110.19)	4.028	(102.31)	3.742	(95.05)	3.596	(91.34)	3.276	(83.21)
25	50	4.806	(122.07)	4.496	(114.20)	4.210	(106.93)	4.064	(103.23)	3.744	(95.10)
28	56	5.274	(133.96)	4.964	(126.09)	4.678	(118.82)	4.532	(115.11)	4.212	(106.98)
30	60	5.586	(141.88)	5.276	(134.01)	4.990	(126.75)	4.844	(123.04)	4.524	(114.91)
36	72	6.522	(165.66)	6.212	(157.78)	5.926	(150.52)	5.780	(146.81)	5.460	(138.68)
43	86	7.614	(193.40)	7.304	(185.52)	7.018	(178.26)	6.872	(174.55)	6.552	(166.42)
44	88	7.770	(197.36)	7.460	(189.48)	7.174	(182.22)	7.028	(178.51)	6.708	(170.38)

Dimensions of Other Connector Sizes are Listed

Downloaded from Elcodis.com electronic components distributor

337/387 SERIES CARD EDGE CONNECTOR

.156" (3.96mm) Contact Spacing

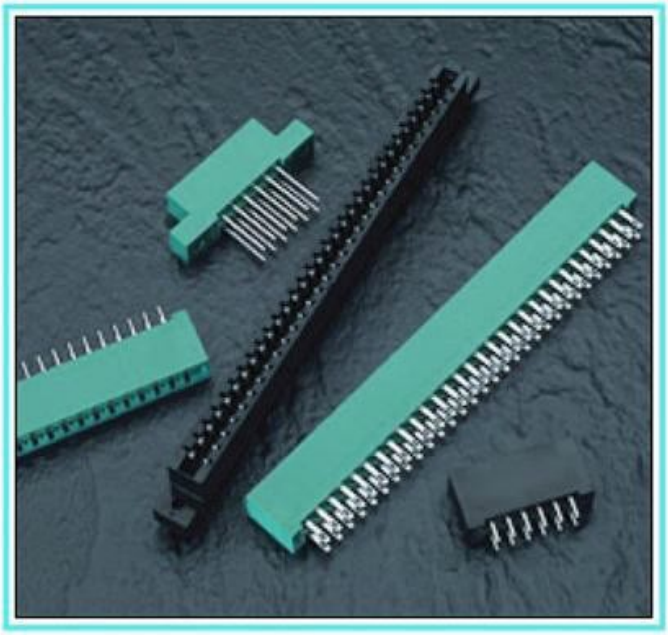

FEATURES

- CSA Approved and UL Recognized
- .156 (3.96) Contact Spacing x .200 (5.08) Row Spacing
- Accepts .062 (1.57) Nominal Thickness P.C. Board
- High Profile Insulator Body, .600 (15.24)
- Contact Termination Options include P.C. Tail, Wire Hole, Wire Wrap, 90 Degree & Extender Board Bends
- Single or Dual Row Configurations
- Large Variety of Mounting Options, Flush or Offset Lugs
- Pre-assembled Card Guides Available
- Accepts Between Contact and In-Contact Polarizing Keys

SPECIFICATIONS

- Insulator Material: Thermoplastic Polyester, UL 94V-0
- Contact Material: Copper, Nickel, Tin Alloy CA-725
- Contact Plating: Gold on the Mating Area, Tin on the Contact Tails, Nickel Underplate
- Current Rating: 3 Amperes Continuous
- Contact Resistance: 10 Milliohms Maximum
- Dielectric Withstanding Voltage: 1800 V AC rms at Sea Level Between Adjacent Contacts
- Insulation Resistance: 5000 Megohms Minimum
- Operating Temperature: -65 to +105 Degrees C
- Insertion Force: 16 oz (4.45 N) Maximum per Contact Pair when Tested with a .070 (1.78) Thick Gauge
- Withdrawal Force: 1 oz (0.28 N) Minimum per Contact Pair when Tested with a .054 (1.37) Thick Gauge

337/387 SERIES ORDERING CODE

Example Part Number 337 - 086 - 524 - 2 04

- **Series** — 337
- **Total Number of Contacts** — 086
- **Contact Code** — 524
- **Contact Rows and Insulator Style** — 2
- **Mounting Options** — 04

Series	Insulator Colour
337	Green
387	Black

Total Number of Contacts [1]	Contact Rows
006, 007,...043	Single Row
012, 014,...086	Dual Row

Contact Code [2,3]	Description & Tail Size		Tail Length "G"
500	Wire Hole	.050 x .025 (1.27 x 0.64)	.260 (6.60)
520	P.C. Tail	.030 x .018 (0.76 x 0.46)	.175 (4.45)
521	P.C. Tail	.025 Square (0.64 Square)	.150 (3.81)
523	P.C. Tail	.025 Square (0.64 Square)	.390 (9.91)
524	P.C. Tail	.018 Square (0.46 Square)	.175 (4.45)
540	Wire Wrap	.025 Square (0.64 Square)	.560(14.22)
541	Wire Wrap	.025 Square (0.64 Square)	.750(19.05)
542	Wire Wrap	.025 Square (0.64 Square)	.645(16.38)
544	Wire Wrap	.050 x .025 (1.27 x 0.64)	.750(19.05)
555	Extender Board Bend (Code 500 Contacts)		
556	Extender Board Bend (Code 520 Contacts)		
558	90 Degree Bend (Code 541 Contacts)		
559	90 Degree Bend (Code 541 Contacts)		
560	Extender Board Bend (Code 523 Contacts)		

Contact Rows and Insulator Style	Description
1	Single Row, Flush Mounting Lugs
2	Dual Row, Flush Mounting Lugs
6	Single Row, .170 (4.32) Offset Lugs
8	Dual Row, .170 (4.32) Offset Lugs

Mounting Options [4,5,6]	Description
01	No Mounting Lugs
02	.128 (3.25) Dia. Mounting Holes
03	.116 (2.95) I.D. Floating Eyelets
04	.156 (3.96) Dia. Mounting Holes
07	M3-0.5 Metric Threaded Inserts
08	#4-40 Unified Threaded Inserts
12	.128 (3.25) Dia. Side Mounting Holes
58	.468 (11.89) Offset Card Guides
68	.344 (8.74) Offset Card Guides
78	In-Line Card Guides

Ordering Code Notes

1) All connector sizes up to 43 contacts single row / 86 contacts dual row are available upon request.
2) The 500 contact code is standard in the 337 series only. Green polyphenylene sulphide insulator material will be supplied.
3) For details of the extender board and 90 degree bends, refer to page 61.
4) For lugless connectors, code 01 mounting, specify contact row codes 1 or 2.
5) In-line card guides are only available with offset mounting lugs.
6) For details of the mounting options, refer to page 63.

Downloaded from Elcodis.com electronic components distributor

CARD EDGE CONNECTOR SERIES 337/387

Contact Spacing .156" (3.96mm)

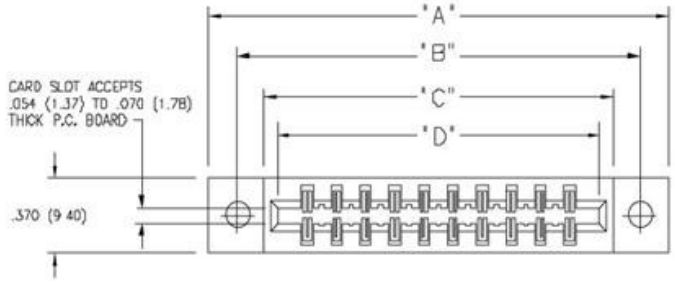

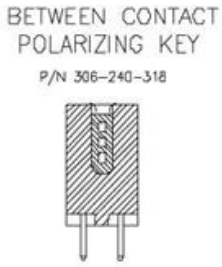

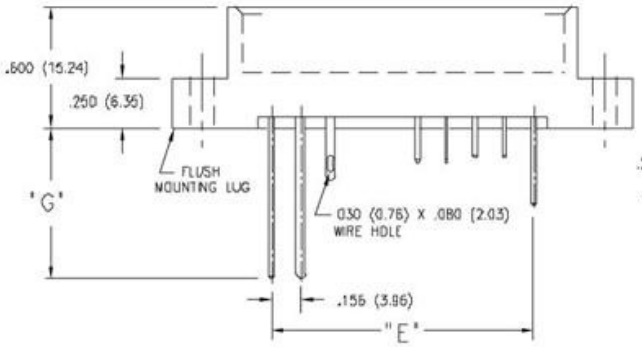

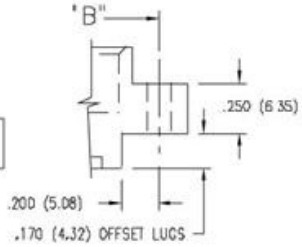

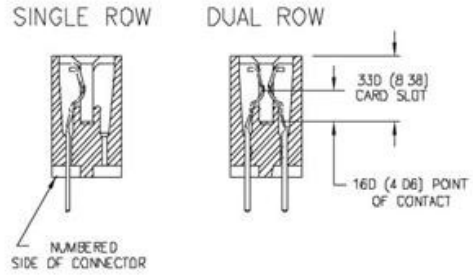

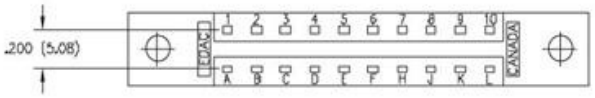

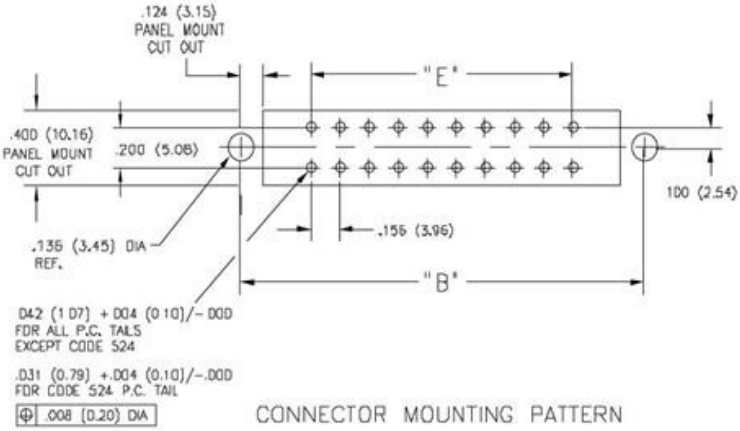

CONNECTOR MOUNTING PATTERN

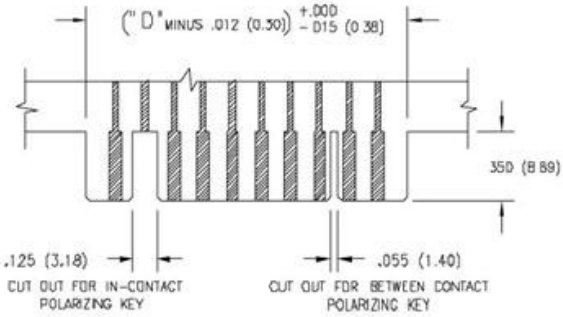

RECOMMENDED DAUGHTER BOARD

NUMBER OF CONTACTS		"A"		"B"		"C"		"D"		"E"	
Single	Dual	Inch	(mm)	Inch	(mm)	Inch	(mm)	Inch	(mm)	Inch	(mm)
6	12	1.842	(46.79)	1.532	(38.91)	1.246	(31.65)	1.100	(27.94)	.780	(19.81)
10	20	2.466	(62.64)	2.156	(54.76)	1.870	(47.50)	1.724	(43.79)	1.404	(35.66)
12	24	2.778	(70.56)	2.468	(62.69)	2.182	(55.42)	2.036	(51.71)	1.716	(43.59)
15	30	3.246	(82.45)	2.936	(74.57)	2.650	(67.31)	2.504	(63.60)	2.184	(55.47)
18	36	3.714	(94.34)	3.404	(86.46)	3.118	(79.20)	2.972	(75.49)	2.652	(67.36)
22	44	4.338	(110.19)	4.028	(102.31)	3.742	(95.05)	3.596	(91.34)	3.276	(83.21)
25	50	4.806	(122.07)	4.496	(114.20)	4.210	(106.93)	4.064	(103.23)	3.744	(95.10)
26	52	4.962	(126.03)	4.652	(118.16)	4.366	(110.90)	4.220	(107.19)	3.900	(99.06)
28	56	5.274	(133.96)	4.964	(126.09)	4.678	(118.82)	4.532	(115.11)	4.212	(106.98)
31	62	5.742	(145.85)	5.432	(137.97)	5.146	(130.71)	5.000	(127.00)	4.680	(118.87)
33	66	6.054	(153.77)	5.744	(145.90)	5.458	(138.63)	5.312	(134.92)	4.992	(126.80)
36	72	6.522	(165.66)	6.212	(157.78)	5.926	(150.52)	5.780	(146.81)	5.460	(138.68)
43	86	7.614	(193.40)	7.304	(185.52)	7.018	(178.26)	6.872	(174.55)	6.552	(166.42)

Dimensions of Other Connector Sizes are Listed

Downloaded from Elcodis.com electronic components distributor

303 SERIES CARD EDGE CONNECTOR

.156" (3.96mm) Contact Spacing

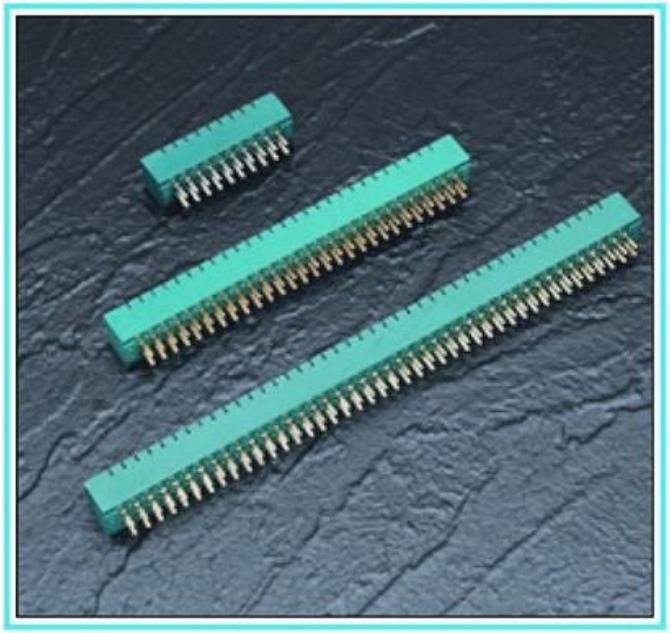

FEATURES

- UL Recognized
- .156 (3.96) Contact Spacing x .140 (3.56) Row Spacing
- Accepts .062 (1.57) Nominal Thickness P.C. Board
- Low Profile Insulator Body, .470 (11.94)
- Contact Termination P.C. Tail
- Variety of Mounting Options
- Accepts Between Contact and In-Contact Polarizing Keys

SPECIFICATIONS

- Insulator Material: Thermoplastic Polyester, UL 94V-O, Colour: Green
- Contact Material: Copper, Nickel, Tin Alloy CA-725
- Contact Plating: Gold Alloy (W.E.#1) Inlay over Nickel on the Mating Area
- Current Rating: 5 Amperes Continuous
- Contact Resistance: 10 Milliohms Maximum
- Dielectric Withstanding Voltage: 1800 V AC rms at Sea Level Between Adjacent Contacts
- Insulation Resistance: 5000 Megohms Minimum
- Operating Temperature: -65 to +105 Degrees C
- Insertion Force: 16 oz (4.45 N) Maximum per Contact Pair when Tested with a .070 (1.78) Thick Gauge
- Withdrawal Force: 1 oz (0.28 N) Minimum per Contact Pair when Tested with a .054 (1.37) Thick Gauge

303 SERIES ORDERING CODE

Example Part Number 303 - 086 - 520 - 202

- **Series** — 303
- **Total Number of Contacts** — 086
- **Contact Code** — 520
- **Mounting Options** — 202

Series 303

Total Number of Contacts [1]	Contact Rows
012, 014,...086	Dual Row

Contact Code	Description & Tail Size	Tail Length "G"
520	P.C. Tail .046 x .010 (1.17 x 0.25)	.219 (5.56)

Mounting Options [2]	Description
201	No Mounting Lugs
202	.128 (3.25) Dia. Mounting Holes
203	.116 (2.95) I.D. Floating Eyelets
204	.156 (3.96) Dia. Mounting Holes
207	M3-0.5 Metric Threaded Inserts
208	#4-40 Unified Threaded Inserts

Ordering Code Notes

1) All connector sizes up to 86 contacts dual row are available upon request.
2) For details of the mounting options, refer to page 63.

Downloaded from Elcodis.com electronic components distributor

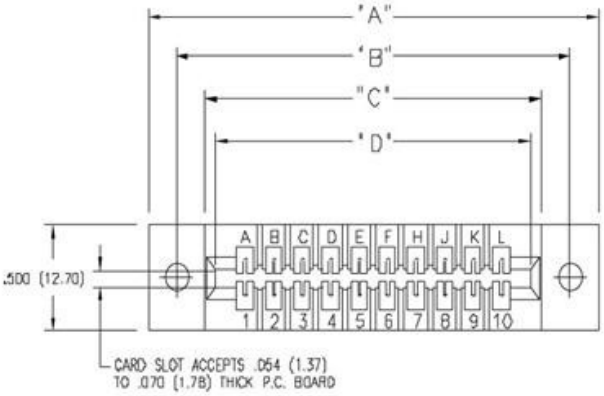

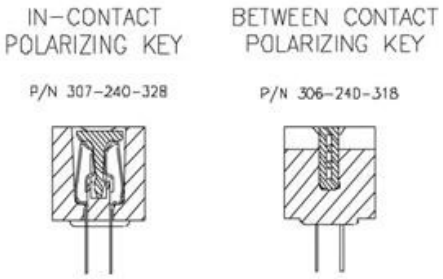

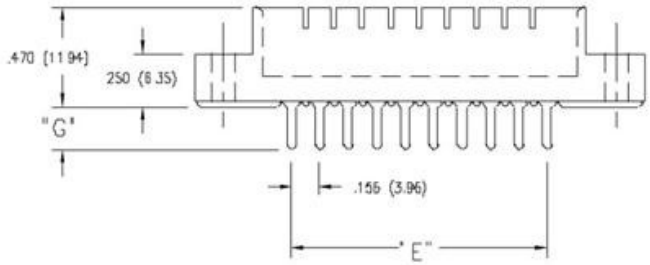

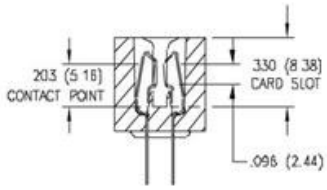

SECTION THROUGH CONTACT POSITION

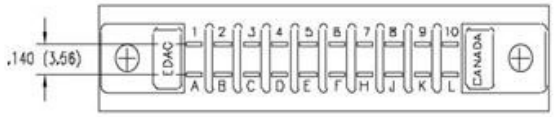

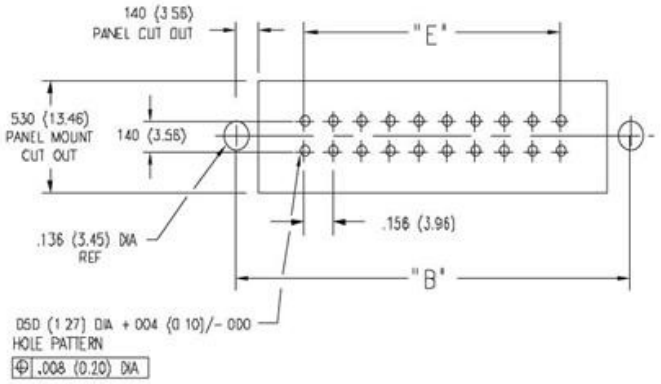

CONNECTOR MOUNTING PATTERN

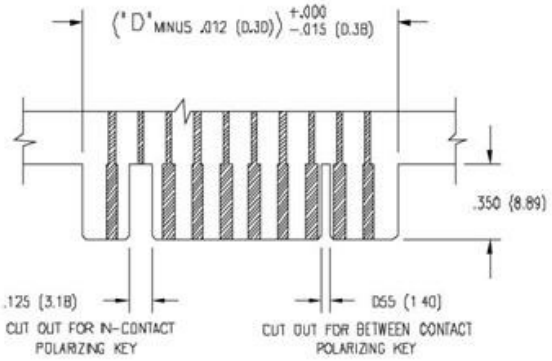

RECOMMENDED DAUGHTER BOARD

NUMBER OF CONTACTS	"A"		"B"		"C"		"D"		"E"	
Dual	Inch	(mm)	Inch	(mm)	Inch	(mm)	Inch	(mm)	Inch	(mm)
12	1.842	(46.79)	1.532	(38.91)	1.220	(30.99)	1.100	(27.94)	.780	(19.81)
20	2.466	(62.64)	2.156	(54.76)	1.844	(46.84)	1.724	(43.79)	1.404	(35.66)
30	3.246	(82.45)	2.936	(74.57)	2.624	(66.65)	2.504	(63.60)	2.184	(55.47)
36	3.714	(94.34)	3.404	(86.46)	3.092	(78.54)	2.972	(75.49)	2.652	(67.36)
44	4.338	(110.19)	4.028	(102.31)	3.716	(94.39)	3.596	(91.34)	3.276	(83.21)
48	4.650	(118.11)	4.340	(110.24)	4.028	(102.31)	3.908	(99.26)	3.588	(91.14)
56	5.274	(133.96)	4.964	(126.09)	4.652	(118.16)	4.532	(115.11)	4.212	(106.98)
72	6.522	(165.66)	6.212	(157.78)	5.900	(149.86)	5.780	(146.81)	5.460	(138.68)
86	7.614	(193.40)	7.304	(185.52)	6.992	(177.60)	6.872	(174.55)	6.552	(166.42)

Dimensions of Other Connector Sizes are Listed

Downloaded from Elcodis.com electronic components distributor

317 SERIES CARD EDGE CONNECTOR

.156" (3.96mm) Contact Spacing

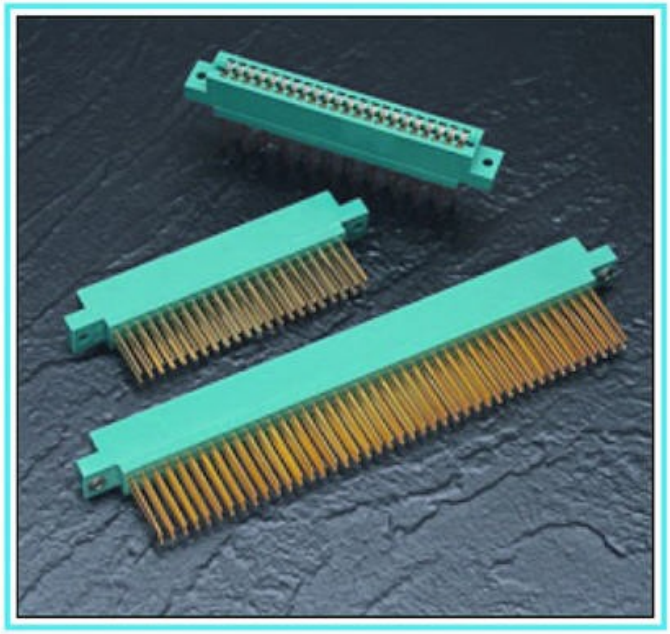

317 SERIES ORDERING CODE

Example Part Number 317 - 072 - 542 - 8 08

- **Series** — 317
- **Total Number of Contacts** — 072
- **Contact Code** — 542
- **Contact Rows** — 8
- **Mounting Options** — 08

Series 317

Total Number of Contacts [1]	Description
006, 007,...043	Single Row
012, 014,...086	Dual Row

Contact Code	Description & Tail Size	Tail Length "G"
Single Row Contact - Read One Side of Daughter Board		
542	Wire Wrap .045 Square (1.14 Square)	.750 (19.05)
Single Row Contacts - Read Both Sides of Daughter Board		
541	Wire Wrap .045 Square (1.14 Square)	.750 (19.05)
Dual Row Contacts		
540	Wire Wrap .045 Square (1.14 Square)	.750 (19.05)
542	Wire Wrap .045 Square (1.14 Square)	.750 (19.05)

Contact Rows	Description
6	Single Row
8	Dual Row

Mounting Options [2]	Description
01	No Mounting Lugs
02	.144 (3.66) Dia. Mounting Holes
03	.116 (2.95) I.D. Floating Eyelets
04	.156 (3.96) Dia. Mounting Holes
07	M3-0.5 Metric Threaded Inserts
08	#4-40 Unified Threaded Inserts
78	In-Line Card Guides

Ordering Code Notes

1) All connector sizes up to 43 contacts single row / 86 contacts dual row are available upon request.
2) For details of the mounting options, refer to page 63.

FEATURES

- .156 (3.96) Contact Spacing x .200 (5.08) Row Spacing
- Accepts .062 (1.57) Nominal Thickness P.C. Board
- High Profile Insulator Body, .720 (18.29)
- Contact Termination .045 (1.14) Square Wire Wrap
- Single or Dual Row Configurations
- Large Variety of Mounting Options
- Pre-assembled Card Guides Available
- Accepts Between Contact and In-Contact Polarizing Keys

SPECIFICATIONS

- Insulator Material: Polyphenylene Sulphide, UL 94V-0, Colour: Green
- Contact Material: Phosphor Bronze Alloy CA-510
- Contact Plating: Gold over Nickel for Entire Contact
- Current Rating: 5 Amperes Continuous
- Contact Resistance: 10 Milliohms Maximum
- Dielectric Withstanding Voltage: 1800 V AC rms at Sea Level Between Adjacent Contacts
- Insulation Resistance: 5000 Megohms Minimum
- Operating Temperature: -65 to +125 Degrees C
- Insertion Force: 16 oz (4.45 N) Maximum per Contact Pair when Tested with a .070 (1.78) Thick Gauge
- Withdrawal Force: 1 oz (0.28 N) Minimum per Contact Pair when Tested with a .054 (1.37) Thick Gauge

IN—CONTACT POLARIZING KEY

P/N 321-240-328

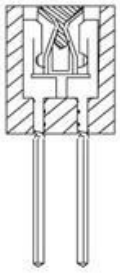

BETWEEN CONTACT POLARIZING KEY

P/N 306-240-318

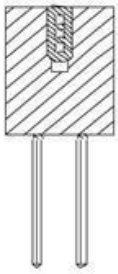

Downloaded from Elcodis.com electronic components distributor

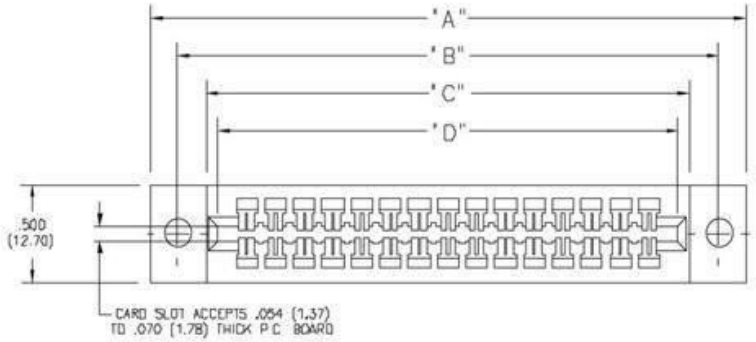

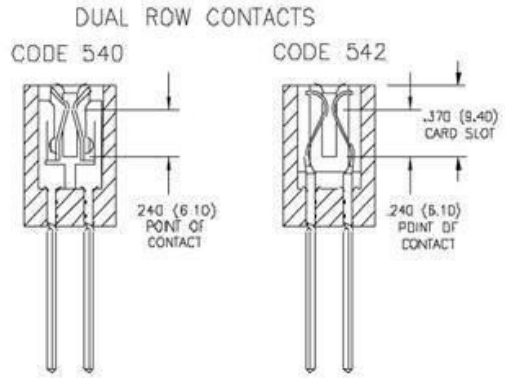

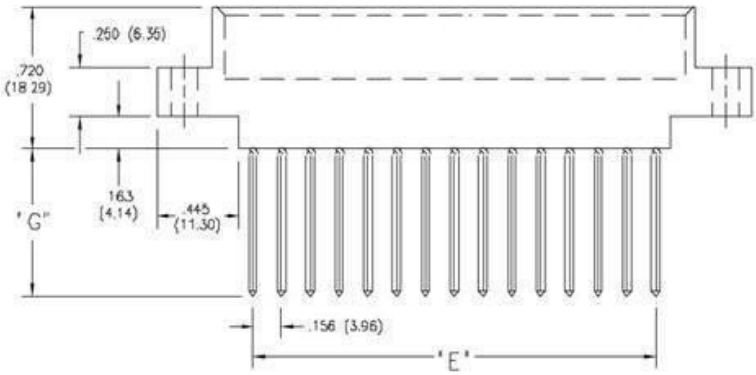

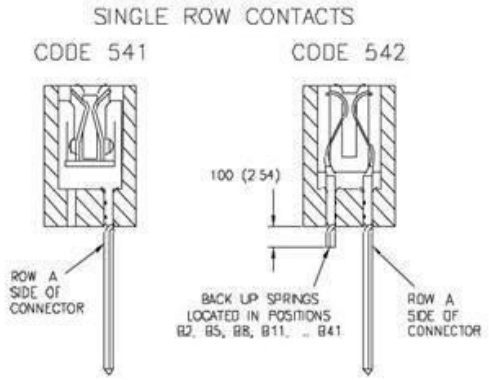

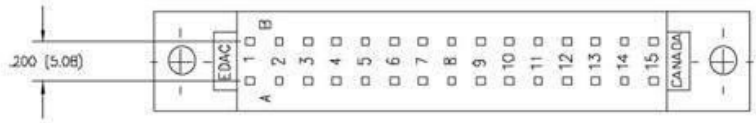

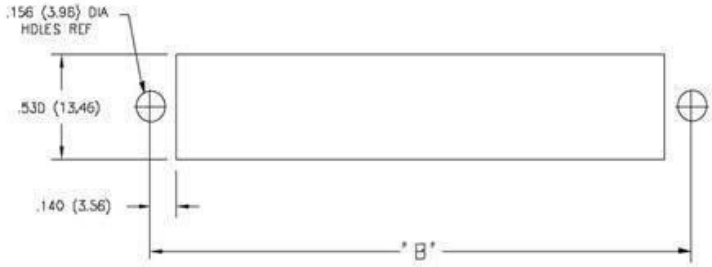

CONNECTOR MOUNTING PATTERN

PANEL MOUNT CUT OUT

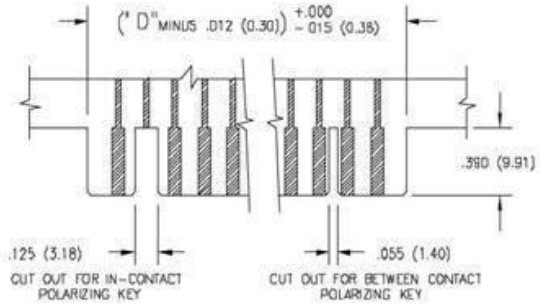

RECOMMENDED DAUGHTER BOARD

NUMBER OF CONTACTS		"A"		"B"		"C"		"D"		"E"	
Single	Dual	Inch	(mm)	Inch	(mm)	Inch	(mm)	Inch	(mm)	Inch	(mm)
6	12	1.830	(46.48)	1.539	(39.09)	1.220	(30.99)	1.100	(27.94)	.780	(19.81)
10	20	2.454	(62.33)	2.163	(54.94)	1.844	(46.84)	1.724	(43.79)	1.404	(35.66)
15	30	3.234	(82.14)	2.943	(74.75)	2.624	(66.65)	2.504	(63.60)	2.184	(55.47)
18	36	3.702	(94.03)	3.411	(86.64)	3.092	(78.54)	2.972	(75.49)	2.652	(67.36)
22	44	4.326	(109.88)	4.035	(102.49)	3.716	(94.39)	3.596	(91.34)	3.276	(83.21)
25	50	4.794	(121.77)	4.503	(114.38)	4.184	(106.27)	4.064	(103.23)	3.744	(95.10)
28	56	5.262	(133.65)	4.971	(126.26)	4.652	(118.16)	4.532	(115.11)	4.212	(106.98)
30	60	5.574	(141.58)	5.283	(134.19)	4.964	(126.09)	4.844	(123.04)	4.524	(114.91)
36	72	6.510	(165.35)	6.219	(157.96)	5.900	(149.86)	5.780	(146.81)	5.460	(138.68)
43	86	7.602	(193.09)	7.311	(185.70)	6.992	(177.60)	6.872	(174.55)	6.552	(166.42)

Dimensions of Other Connector Sizes are Listed

Downloaded from Elcodis.com electronic components distributor

333 SERIES CARD EDGE CONNECTOR

.156" (3.96mm) Contact Spacing

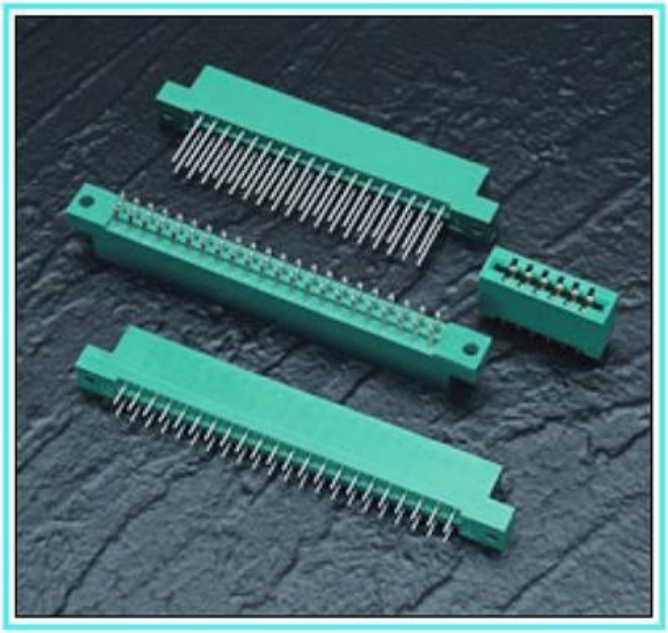

FEATURES

- .156 (3.96) Contact Spacing x .200 (5.08) Row Spacing
- Accepts .062 (1.57) Nominal Thickness P.C. Board
- High Profile Insulator Body, .600 (15.24)
- Contact Termination Options include P.C. Tail, Wire Hole, Wire Wrap, 90 Degree & Extender Board Bends
- Single or Dual Row Configurations
- Variety of Mounting Options, Flush or Offset Lugs
- Accepts Between Contact and In-Contact Polarizing Keys

SPECIFICATIONS

- Insulator Material: Thermoplastic Polyester, UL 94V-0, Colour: Green
- Contact Material: Copper, Nickel, Tin Alloy CA-725
- Contact Plating: Gold on the Mating Area, Tin on the Contact Tails, Nickel Underplate
- Current Rating: 3 Amperes Continuous
- Contact Resistance: 10 Milliohms Maximum
- Dielectric Withstanding Voltage: 1800 V AC rms at Sea Level Between Adjacent Contacts
- Insulation Resistance: 5000 Megohms Minimum
- Operating Temperature: -65 to +105 Degrees C
- Insertion Force: 16 oz (4.45 N) Maximum per Contact Pair when Tested with a .070 (1.78) Thick Gauge
- Withdrawal Force: 1 oz (0.28 N) Minimum per Contact Pair when Tested with a .054 (1.37) Thick Gauge

333 SERIES ORDERING CODE

Example Part Number 333 - 044 - 520 - 2 04

- **Series** — 333
- **Total Number of Contacts** — 044
- **Contact Code** — 520
- **Contact Rows and Insulator Style** — 2
- **Mounting Options** — 04

Series 333

Total Number of Contacts [1]	Description
006, 007,...043	Single Row
012, 014,...086	Dual Row

Contact Code [2,3]	Description & Tail Size		Tail Length "G"
500	Wire Hole	.050 x .025 (1.27 x 0.64)	.260 (6.60)
520	P.C. Tail	.030 x .018 (0.76 x 0.46)	.175 (4.45)
521	P.C. Tail	.025 Square (0.64 Square)	.150 (3.81)
523	P.C. Tail	.025 Square (0.64 Square)	.390 (9.91)
524	P.C. Tail	.018 Square (0.46 Square)	.175 (4.45)
540	Wire Wrap	.025 Square (0.64 Square)	.560 (14.22)
541	Wire Wrap	.025 Square (0.64 Square)	.750 (19.05)
542	Wire Wrap	.025 Square (0.64 Square)	.645 (16.38)
544	Wire Wrap	.050 x .025 (1.27 x 0.64)	.750 (19.05)
555	Extender Board Bend (Code 500 Contacts)		
556	Extender Board Bend (Code 520 Contacts)		
558	90 Degree Bend (Code 541 Contacts)		
559	90 Degree Bend (Code 541 Contacts)		
560	Extender Board Bend (Code 523 Contacts)		

Contact Rows and Insulator Style	Description
1	Single Row, Flush Mounting Lugs
2	Dual Row, Flush Mounting Lugs
6	Single Row, .170 (4.32) Offset Lugs
8	Dual Row, .170 (4.32) Offset Lugs

Mounting Options [4,5]	Description
01	No Mounting Lugs
02	.128 (3.25) Dia. Mounting Holes
03	.116 (2.95) I.D. Floating Eyelets
04	.156 (3.96) Dia. Mounting Holes
07	M3-0.5 Metric Threaded Inserts
08	#4-40 Unified Threaded Inserts
12	.128 (3.25) Dia. Side Mounting Holes

Ordering Code Notes

1) All connector sizes up to 43 contacts single row / 86 contacts dual row are available upon request.
2) When the 500 contact code is ordered, green polyphenylene sulphide insulator material will be supplied.
3) For details of the extender board and 90 degree bends, refer to page 61.
4) For lugless connectors, code 01 mounting, specify contact row codes 1 or 2.
5) For details of the mounting options, refer to page 63.

Downloaded from Elcodis.com electronic components distributor

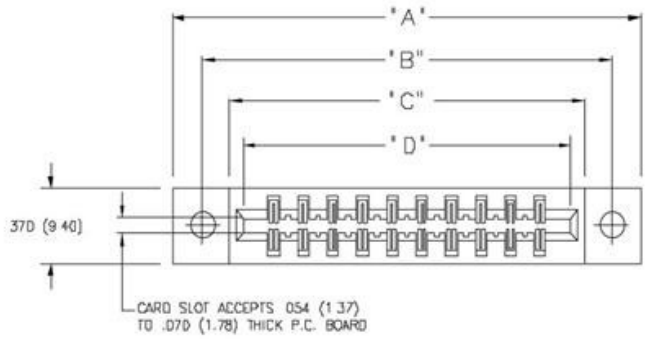

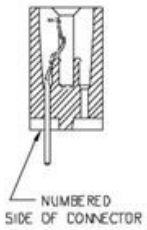

SINGLE ROW

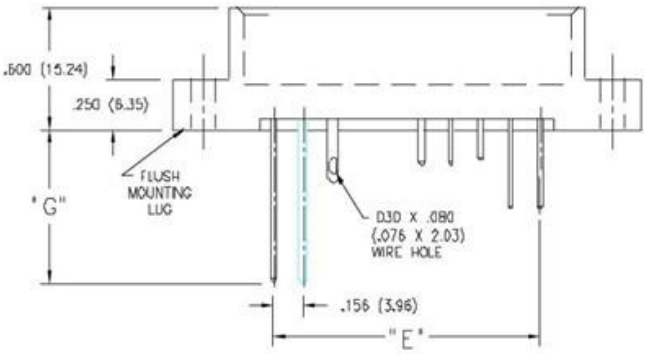

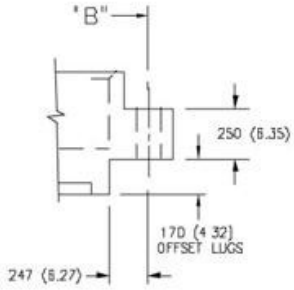

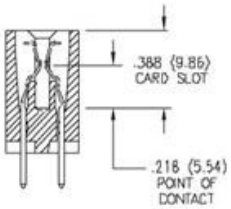

DUAL ROW

IN-CONTACT POLARIZING KEY

P/N 345-240-328

BETWEEN CONTACT POLARIZING KEY

P/N 306-240-318

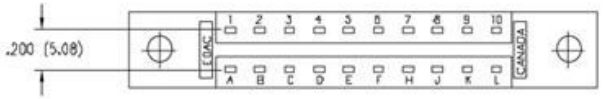

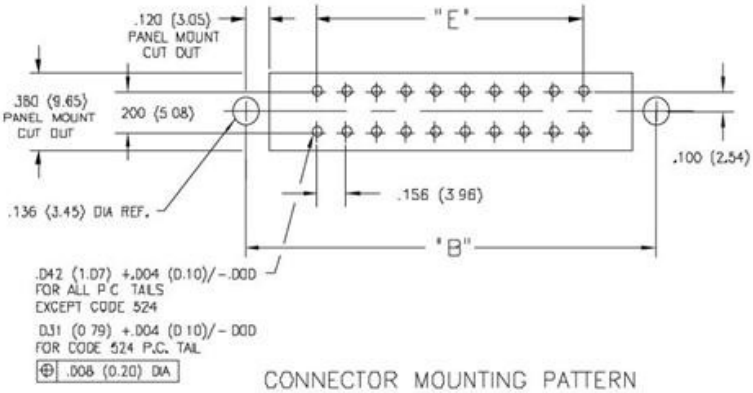

CONNECTOR MOUNTING PATTERN

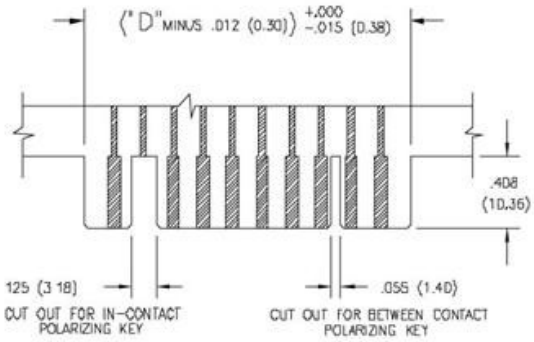

RECOMMENDED DAUGHTER BOARD

NUMBER OF CONTACTS		"A"		"B"		"C"		"D"		"E"	
Single	Dual	Inch	(mm)	Inch	(mm)	Inch	(mm)	Inch	(mm)	Inch	(mm)
6	12	1.784	(45.31)	1.534	(38.96)	1.261	(32.03)	1.100	(27.94)	.780	(19.81)
10	20	2.408	(61.16)	2.158	(54.81)	1.885	(47.88)	1.724	(43.79)	1.404	(35.66)
15	30	3.188	(80.98)	2.938	(74.63)	2.665	(67.69)	2.504	(63.60)	2.184	(55.47)
18	36	3.656	(92.86)	3.406	(86.51)	3.133	(79.58)	2.972	(75.49)	2.652	(67.36)
22	44	4.280	(108.71)	4.030	(102.36)	3.757	(95.43)	3.596	(91.34)	3.276	(83.21)
28	56	5.216	(132.49)	4.966	(126.14)	4.693	(119.20)	4.532	(115.11)	4.212	(106.98)
36	72	6.464	(164.19)	6.214	(157.84)	5.941	(150.90)	5.780	(146.81)	5.460	(138.68)
37	74	6.620	(168.15)	6.370	(161.80)	6.097	(154.86)	5.936	(150.77)	5.616	(142.65)
43	86	7.556	(191.92)	7.306	(185.57)	7.033	(178.64)	6.872	(174.55)	6.552	(166.42)

Dimensions of Other Connector Sizes are Listed

Downloaded from Elcodis.com electronic components distributor

336 SERIES CARD EDGE CONNECTOR

.156" (3.96mm) Contact Spacing

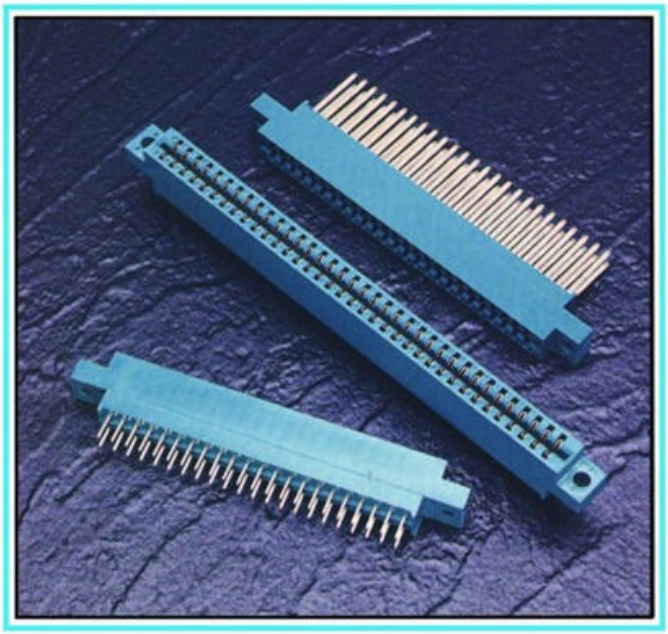

FEATURES

- .156 (3.96) Contact Spacing x .188 (4.78) Row Spacing
- Accepts .062 (1.57) Nominal Thickness P.C. Board
- High Profile Insulator Body, .720 (18.29)
- Contact Termination Options include P.C. Tail and .062 (1.57) x .031 (0.79) Wire Wrap
- Single or Dual Row Configurations
- Variety of Mounting Options
- Accepts Between Contact and In-Contact Polarizing Keys

SPECIFICATIONS

- Insulator Material: Polyphenylene Sulphide, UL 94V-O, Colour: Green
- Contact Material: Copper, Nickel, Tin Alloy CA-725
- Contact Plating: Gold Alloy (W.E.#1) Inlay over Nickel on the Mating Area
- Current Rating: 5 Amperes Continuous
- Contact Resistance: 10 Milliohms Maximum
- Dielectric Withstanding Voltage: 1800 V AC rms at Sea Level Between Adjacent Contacts
- Insulation Resistance: 5000 Megohms Minimum
- Operating Temperature: -65 to +125 Degrees C
- Insertion Force: 16 oz (4.45 N) Maximum per Contact Pair when Tested with a .070 (1.78) Thick Gauge
- Withdrawal Force: 1 oz (0.28 N) Minimum per Contact Pair when Tested with a .054 (1.37) Thick Gauge

336 SERIES ORDERING CODE

Example Part Number 336 - 072 - 520 - 8 09

- **Series** — 336
- **Total Number of Contacts** — 072
- **Contact Code** — 520
- **Contact Rows** — 8
- **Mounting Options** — 09

Series 336

Total Number of Contacts [1]	Contact Rows
006, 007,...043	Single Row
012, 014,...086	Dual Row

Contact Code	Description & Tail Size	Tail Length "G"
520	P.C. Tail .031 Square (0.79 Square)	.260 (6.60)
541	Wire Wrap .062 x .031 (1.57 x 0.79)	.750 (19.05)

Contact Rows	Description
6	Single Row
8	Dual Row

Mounting Options [2]	Description
01	No Mounting Lugs
02	.128 (3.25) Dia. Mounting Holes
03	.116 (2.95) I.D. Floating Eyelets
04	.156 (3.96) Dia. Mounting Holes
07	M3-0.5 Metric Threaded Inserts
08	#4-40 Unified Threaded Inserts
09	.178 (4.52) Dia. Mounting Holes

Ordering Code Notes

1) All connector sizes up to 43 contacts single row / 86 contacts dual row are available upon request.
2) For details of the mounting options, refer to page 63.

Downloaded from Elcodis.com electronic components distributor

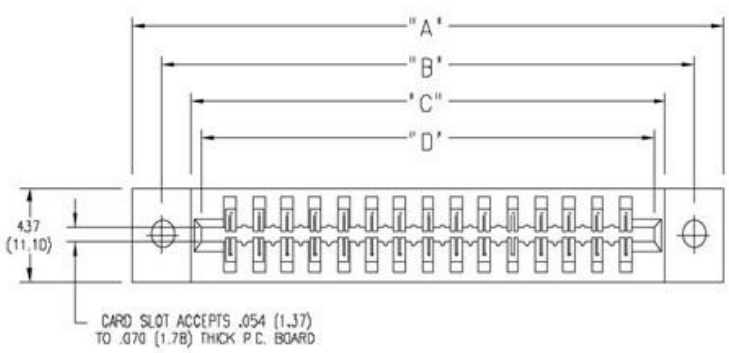

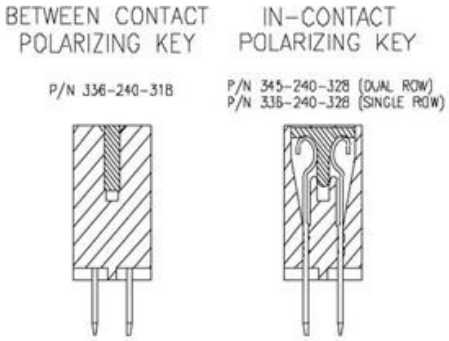

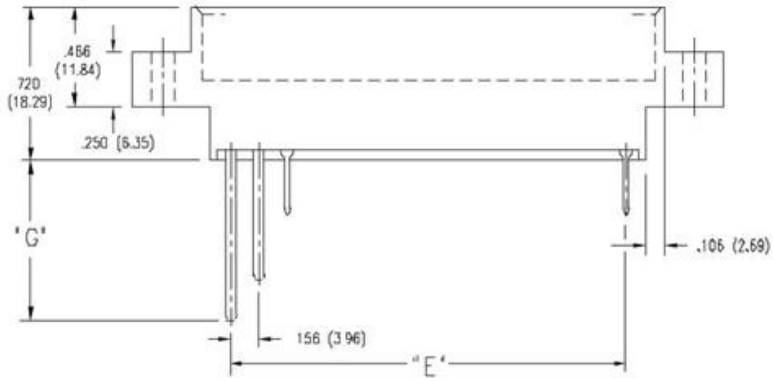

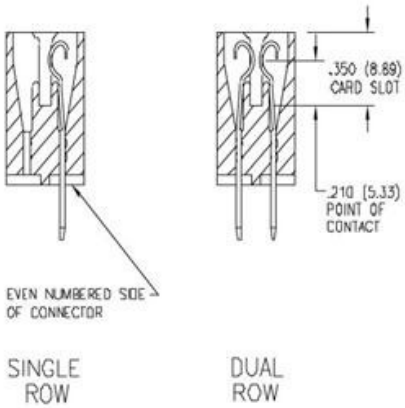

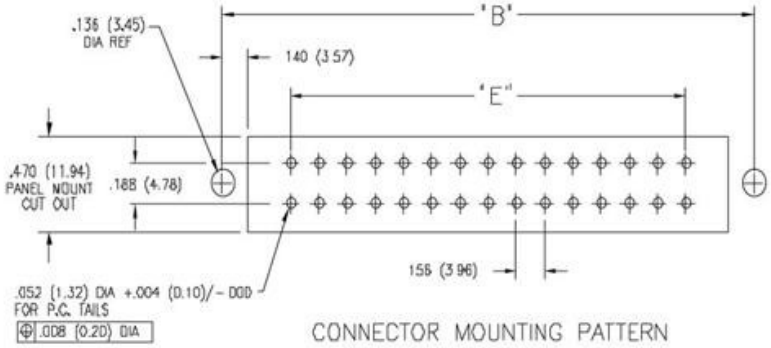

CONNECTOR MOUNTING PATTERN

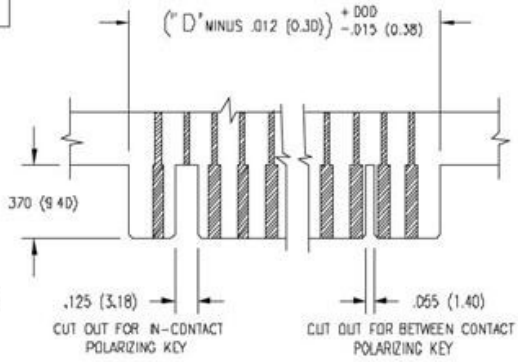

RECOMMENDED DAUGHTER BOARD

NUMBER OF CONTACTS		"A"		"B"		"C"		"D"		"E"	
Single	Dual	Inch	(mm)	Inch	(mm)	Inch	(mm)	Inch	(mm)	Inch	(mm)
6	12	1.857	(47.17)	1.534	(38.96)	1.216	(30.89)	1.100	(27.94)	.780	(19.81)
10	20	2.481	(63.02)	2.158	(54.81)	1.840	(46.74)	1.724	(43.79)	1.404	(35.66)
15	30	3.261	(82.83)	2.938	(74.63)	2.620	(66.55)	2.504	(63.60)	2.184	(55.47)
18	36	3.729	(94.72)	3.406	(86.51)	3.088	(78.44)	2.972	(75.49)	2.652	(67.36)
22	44	4.353	(110.57)	4.030	(102.36)	3.712	(94.28)	3.596	(91.34)	3.276	(83.21)
25	50	4.821	(122.45)	4.498	(114.25)	4.180	(106.17)	4.064	(103.23)	3.744	(95.10)
28	56	5.289	(134.34)	4.966	(126.14)	4.648	(118.06)	4.532	(115.11)	4.212	(106.98)
36	72	6.537	(166.04)	6.214	(157.84)	5.896	(149.76)	5.780	(146.81)	5.460	(138.68)
43	86	7.629	(193.78)	7.306	(185.57)	6.988	(177.50)	6.872	(174.55)	6.552	(166.42)

Dimensions of Other Connector Sizes are Listed

Downloaded from Elcodis.com electronic components distributor

338 SERIES CARD EDGE CONNECTOR

.156" (3.96mm) Contact Spacing

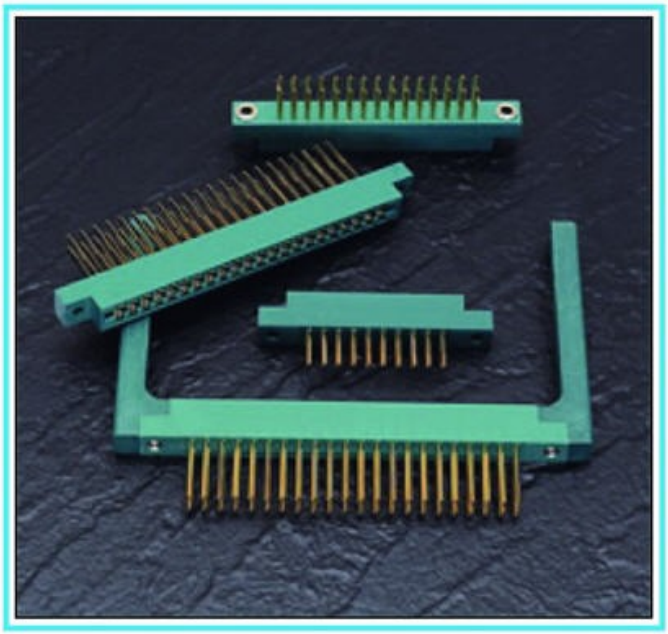

FEATURES

- .156 (3.96) Contact Spacing x .200 (5.08) Row Spacing
- Accepts .062 (1.57) Nominal Thickness P.C. Board
- Low Profile Insulator Body, .473 (12.01)
- Contact Termination .045 (1.14) Square Wire Wrap
- Single or Dual Row Configurations
- Large Variety of Mounting Options
- Pre-assembled Card Guides Available
- Accepts Between Contact and In-Contact Polarizing Keys

SPECIFICATIONS

- Insulator Material: Polyphenylene Sulphide, UL 94V-O, Colour: Green
- Contact Material: Phosphor Bronze Alloy CA-510
- Contact Plating: Gold over Nickel for Entire Contact
- Current Rating: 5 Amperes Continuous
- Contact Resistance: 10 Milliohms Maximum
- Dielectric Withstanding Voltage: 1800 V AC rms at Sea Level Between Adjacent Contacts
- Insulation Resistance: 5000 Megohms Minimum
- Operating Temperature: -65 to +125 Degrees C
- Insertion Force: 16 oz (4.45 N) Maximum per Contact Pair when Tested with a .070 (1.78) Thick Gauge
- Withdrawal Force: 1 oz (0.28 N) Minimum per Contact Pair when Tested with a .054 (1.37) Thick Gauge

338 SERIES ORDERING CODE

Example Part Number 338 - 044 - 541 - 2 08

- **Series** — 338
- **Total Number of Contacts** — 044
- **Contact Code** — 541
- **Contact Rows** — 2
- **Mounting Options** — 08

Series 338

Total Number of Contacts	Contact Rows
010, 015, 018, 022 or 028	Single Row
020, 030, 036, 044 or 056	Dual Row

Contact Code	Description & Tail Size	Tail Length "G"
540	Wire Wrap .045 Square (1.14 Square)	.480(12.19)
541	Wire Wrap .045 Square (1.14 Square)	.730(18.54)

Contact Rows	Description
1	Single Row
2	Dual Row

Mounting Options[1]	Description
01	No Mounting Lugs
02	.128 (3.25) Dia. Mounting Holes
03	.116 (2.95) I.D. Floating Eyelets
04	.156 (3.96) Dia. Mounting Holes
07	M3-0.5 Metric Threaded Inserts
08	#4-40 Unified Threaded Inserts
58	.468 (11.89) Offset Card Guides
68	.344 (8.74) Offset Card Guides
78	In-Line Card Guides

Ordering Code Notes

1) For details of the mounting options, refer to page 63.

Downloaded from Elcodis.com electronic components distributor

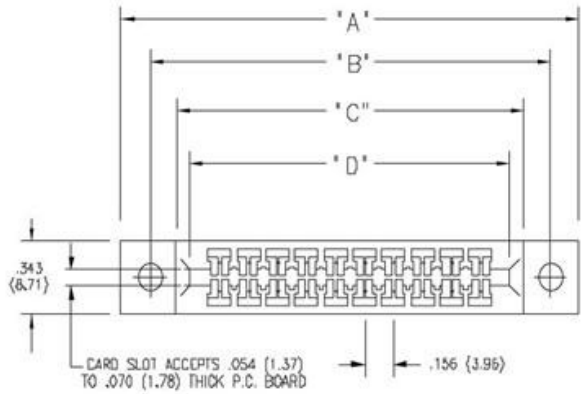

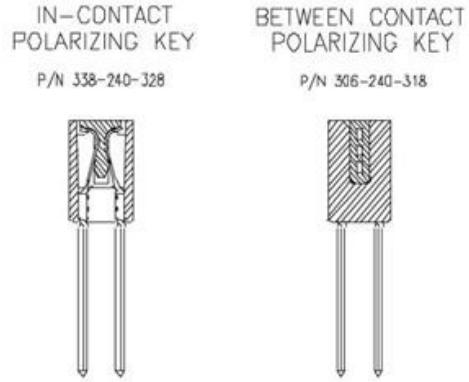

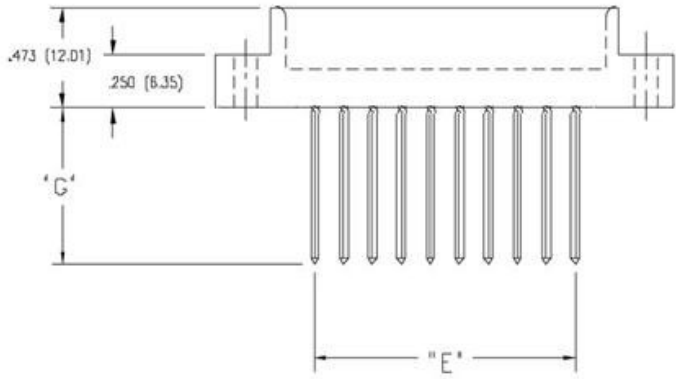

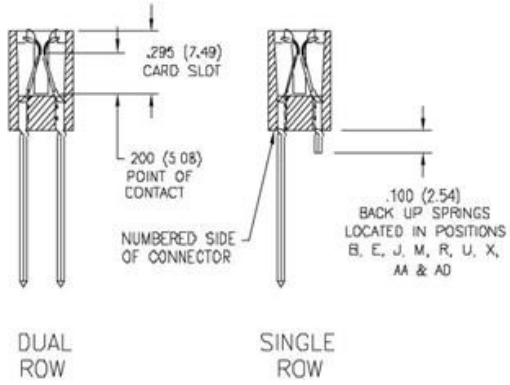

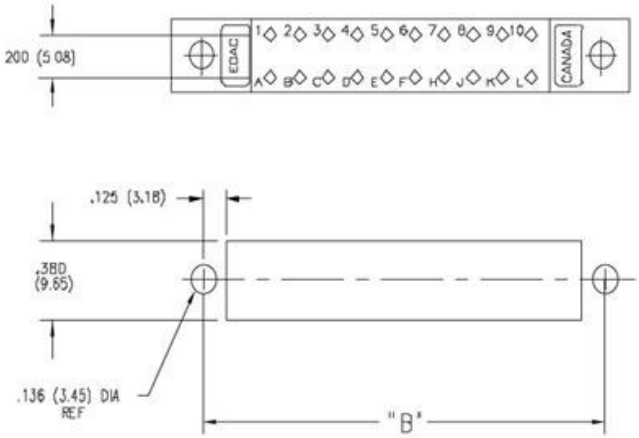

CONNECTOR MOUNTING PATTERN

PANEL MOUNT CUT OUT

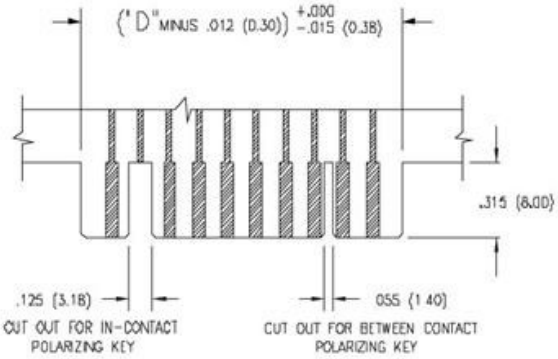

RECOMMENDED DAUGHTER BOARD

NUMBER OF CONTACTS		"A"		"B"		"C"		"D"		"E"	
Single	Dual	Inch	(mm)	Inch	(mm)	Inch	(mm)	Inch	(mm)	Inch	(mm)
10	20	2.466	(62.64)	2.156	(54.76)	1.870	(47.50)	1.724	(43.79)	1.404	(35.66)
15	30	3.246	(82.45)	2.936	(74.57)	2.650	(67.31)	2.504	(63.60)	2.184	(55.47)
18	36	3.714	(94.34)	3.404	(86.46)	3.118	(79.20)	2.972	(75.49)	2.652	(67.36)
22	44	4.338	(110.19)	4.028	(102.31)	3.742	(95.05)	3.596	(91.34)	3.276	(83.21)
28	56	5.274	(133.96)	4.964	(126.09)	4.678	(118.82)	4.532	(115.11)	4.212	(106.98)

Downloaded from Elcodis.com electronic components distributor

310 SERIES CARD EDGE CONNECTOR

.156" (3.96mm) Contact Spacing

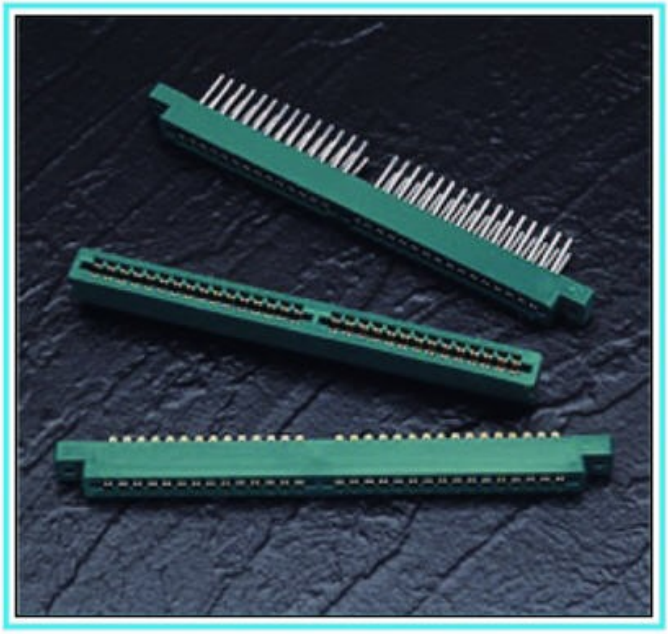

310 SERIES ORDERING CODE

Example Part Number 310 - 060 - 520 - 2 02

- **Series** — 310
- **Total Number of Contacts** — 060
- **Contact Code** — 520
- **Contact Rows** — 2
- **Mounting Options** — 02

Series 310

Total Number of Contacts	Contact Rows
030	Single Row
060	Dual Row

Contact Code [1]

See 307/357 Series for Available Contact Options and "G" Dimension

Contact Rows	Description
1	Single Row
2	Dual Row

Mounting Options [2]	Description
01	No Mounting Lugs
02	.128 (3.25) Dia.Mounting Holes
03	.116 (2.95) I.D. Floating Eyelets
04	.156 (3.96) Dia. Mounting Holes
07	M3-0.5 Metric Threaded Inserts
08	#4-40 Unified Threaded Inserts

Ordering Code Notes

1) 90 degree bends are not available on the 310 series.
2) For details of the mounting options, refer to page 63.

FEATURES

- .156 (3.96) Contact Spacing x .200 (5.08) Row Spacing
- Accepts .062 (1.57) Nominal Thickness P.C. Board
- Low Profile Insulator Body .460 (11.68), with Card Slot Barrier
- Contact Termination Options include P.C. Tail, Wire Hole, Wire Wrap & Extender Board Bends
- Single or Dual Row Configurations
- Variety of Mounting Options
- Accepts Between Contact and In-Contact Polarizing Keys

SPECIFICATIONS

- Insulator Material: Thermoplastic Polyester, UL 94V-0, Colour: Green
- Contact Material: Copper, Nickel, Tin Alloy CA-725
- Contact Plating: Gold on the Mating Area, Tin on the Contact Tails, Nickel Underplate
- Current Rating: 5 Amperes Continuous
- For Additional Specifications, Refer to 307/357 Series.

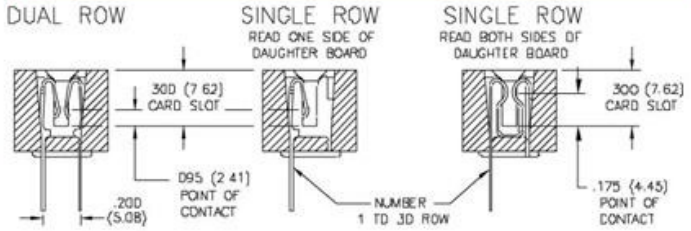

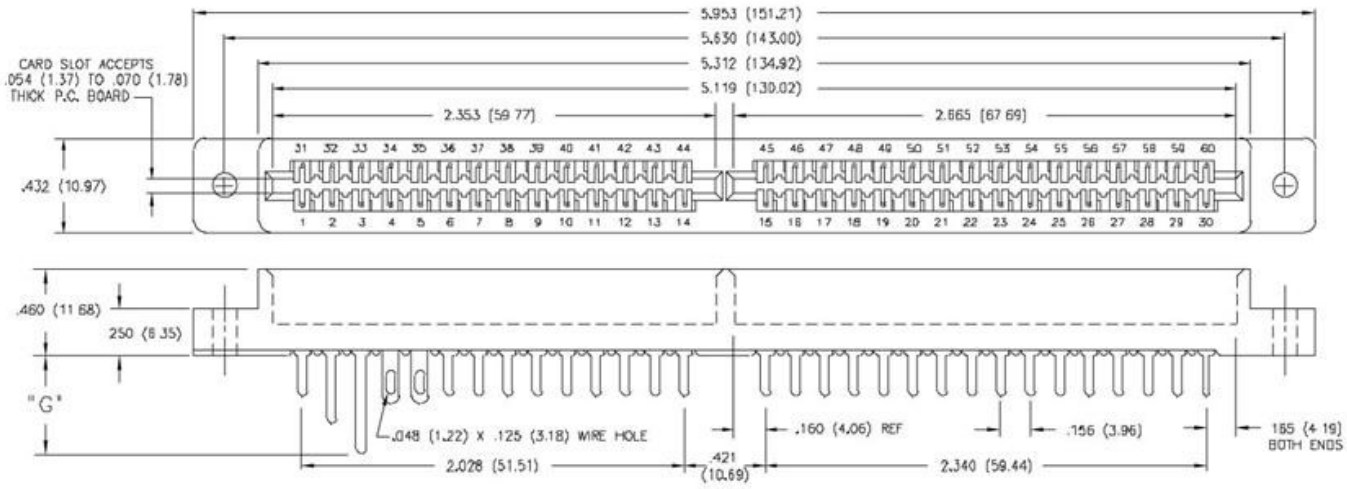

Downloaded from Elcodis.com electronic components distributor

321 SERIES ORDERING CODE

Example Part Number 321 - 030 - 542 - 8 02

- **Series** — 321
- **Total Number of Contacts** — 030
- **Contact Code** — 542
- **Contact Rows** — 8
- **Mounting Options** — 02

Series 321

Total Number of Contacts	Contact Rows
015	Single Row
030	Dual Row

Contact Code

See 317 Series for Available Contact Options and "G" Dimension

Contact Rows	Description
6	Single Row
8	Dual Row

Mounting Options[1]	Description
01	No Mounting Lugs
02	.128 (3.25) Dia. Mounting Holes
03	.116 (2.95) I.D. Floating Eyelets
04	.156 (3.96) Dia. Mounting Holes
07	M3-0.5 Metric Threaded Inserts
08	#4-40 Unified Threaded Inserts

Ordering Code Notes

1) For details of the mounting options, refer to page 63.

FEATURES

- .156 (3.96) Contact Spacing x .200 (5.08) Row Spacing
- Accepts .062 (1.57) Nominal Thickness P.C. Board
- High Profile Insulator Body, .705 (17.91)
- Contact Termination .045 (1.14) Square Wire Wrap
- Single or Dual Row Configurations
- Variety of Mounting Options
- Accepts Between Contact and In-Contact Polarizing Keys

SPECIFICATIONS

- Insulator Material: Polyphenylene Sulphide, UL 94V-0, Colour: Green
- Contact Material: Phosphor Bronze Alloy CA-510
- Contact Plating: Gold over Nickel for Entire Contact
- Current Rating: 5 Amperes Continuous
- For Additional Specifications, Refer to 317 Series

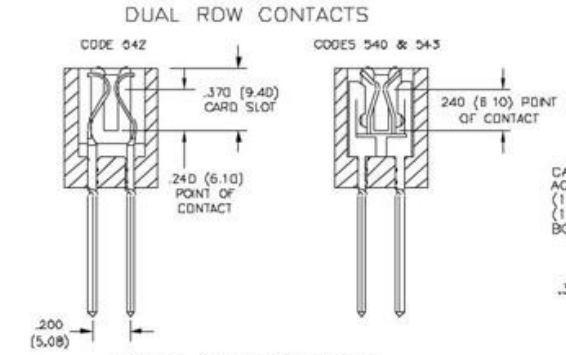

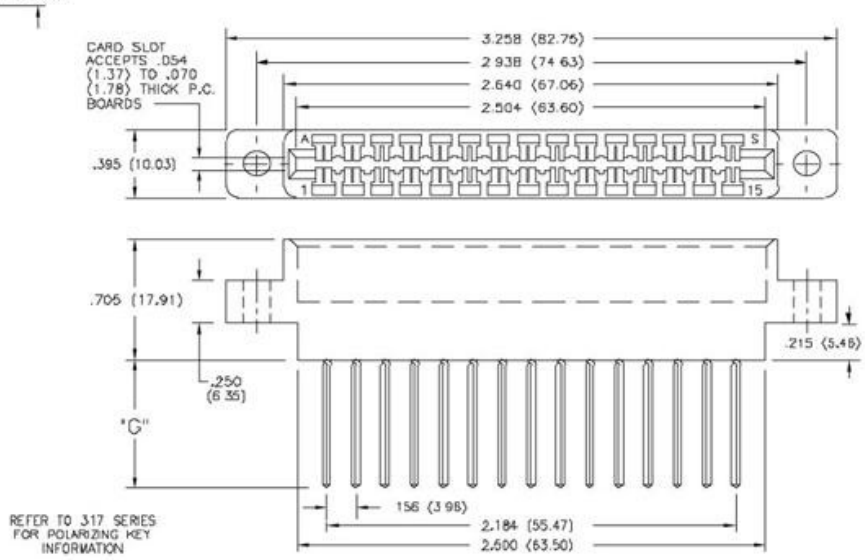

Downloaded from Elcodis.com electronic components distributor

322 SERIES CARD EDGE CONNECTOR

.156" (3.96mm) Contact Spacing

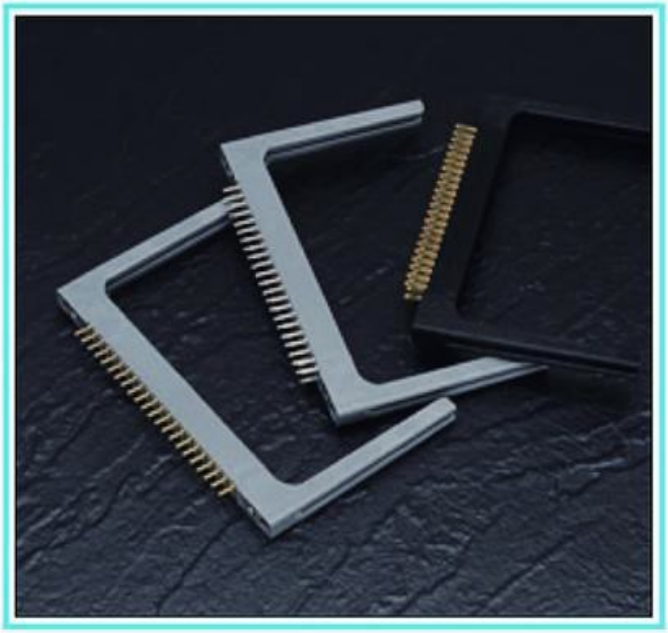

322 SERIES ORDERING CODE

Example Part Number 322 - 044 - 500 - 2 58

- **Series** — 322
- **Total Number of Contacts** — 044
- **Contact Code** — 500
- **Contact Rows and Insulator Material** — 2
- **Mounting Options** — 58

Series 322

Total Number of Contacts	Contact Rows
022	Single Row
044	Dual Row

Contact Code

See 307/357 Series for Available Contact Options and "G" Dimension

Contact Rows and Insulator Material	Description
1	Single Row, Grey Polycarbonate
2	Dual Row, Grey Polycarbonate

Mounting Options	Description
54	.156 (3.96) Dia. x .300 (7.62) Deep Holes
57	M3-0.5 Metric Threaded Inserts
58	#4-40 Unified Threaded Inserts

FEATURES

- .156 (3.96) Contact Spacing x .200 (5.08) Row Spacing
- Accepts .062 (1.57) Nominal Thickness P.C. Board
- Low Profile Insulator Body .473 (12.01), with Card Guides
- Contact Termination Options include P.C. Tail, Wire Hole, Wire Wrap, 90 Degree & Extender Board Bends
- Single or Dual Row Configurations
- Accepts Between Contact and In-Contact Polarizing Keys

SPECIFICATIONS

- Insulator Material: Polycarbonate , Glass Reinforced
- Contact Material: Copper, Nickel, Tin Alloy CA-725
- Contact Plating: Gold on the Mating Area, Tin on the Contact Tails, Nickel Underplate
- Current Rating: 5 Amperes Continuous
- For Additional Specifications, Refer to 307/357 Series.

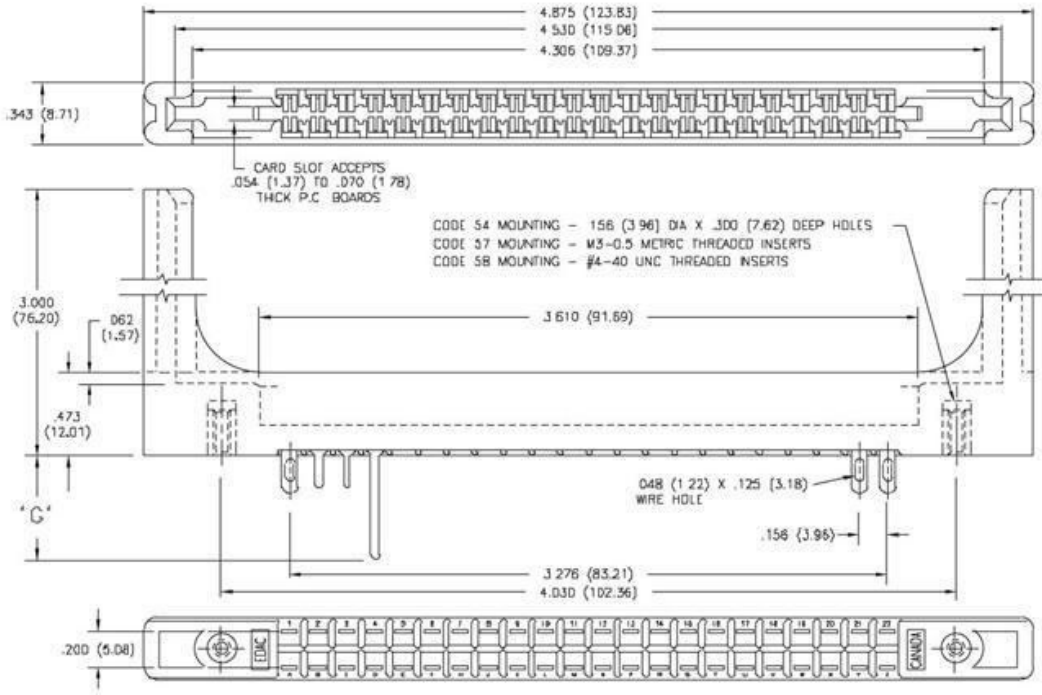

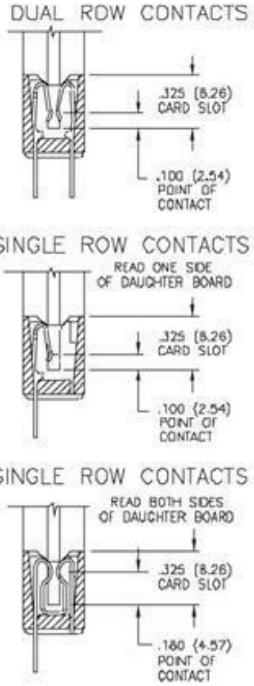

Downloaded from Elcodis.com electronic components distributor

323 SERIES ORDERING CODE

Example Part Number 323 - 086 - 540 - 802

- **Series** — 323
- **Total Number of Contacts** — 086
- **Contact Code** — 540
- **Mounting Options** — 802

Series 323

Total Number of Contacts 086

Contact Code	Description & Tail Size	Tail Length "G"
542	Wire Wrap .045 Square (1.14 Square)	.750(19.05)

Mounting Options[1]	Description
802	.144 (3.66) Dia. Mounting Holes
803	.116 (2.95) I.D. Floating Eyelets
804	.156 (3.96) Dia. Mounting Holes
807	M3-0.5 Metric Threaded Inserts
808	#4-40 Unified Threaded Inserts

Ordering Code Notes

1) For details of the mounting options, refer to page 63.

FEATURES

- .156 (3.96) Contact Spacing x .200 (5.08) Row Spacing
- Accepts .062 (1.57) Nominal Thickness P.C. Board
- High Profile Insulator Body, .720 (18.29)
- Contact Termination .045 (1.14) Square Wire Wrap
- Variety of Mounting Options
- Accepts Between Contact and In-Contact Polarizing Keys

SPECIFICATIONS

- Insulator Material: Polycarbonate, Colour: Grey
- Contact Material: Phosphor Bronze Alloy CA-510
- Contact Plating: Gold over Nickel for Entire Contact
- For Additional Specifications, Refer to 317 Series

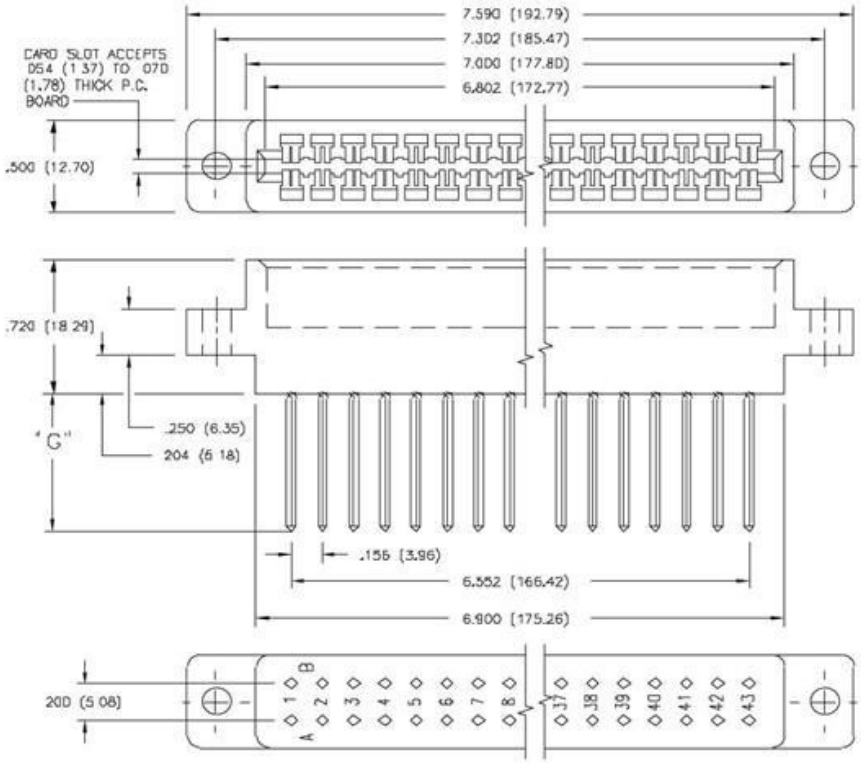

SECTION THROUGH CONTACT POSITION

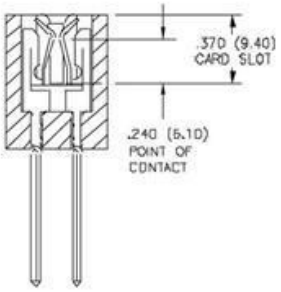

FOR 323 SERIES CONNECTOR, SPECIFY BETWEEN CONTACT POLARIZING KEY P/N 243-240-318 OR IN-CONTACT POLARIZING KEY P/N 321-240-328

Downloaded from Elcodis.com electronic components distributor

368 SERIES EDGE CARD CONNECTOR

.156" (3.96mm) Contact Spacing

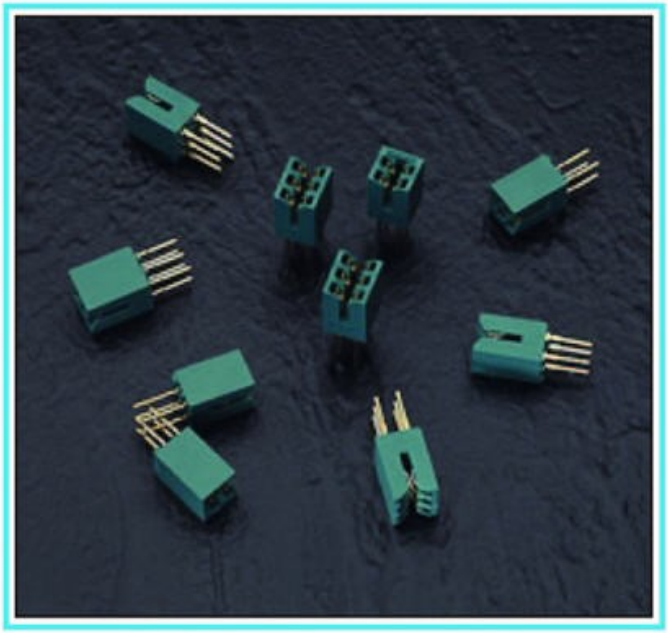

368 SERIES ORDERING CODE

Example Part Number 368 - 006 - 540 - 201

- **Series** — 368
- **Total Number of Contacts** — 006
- **Contact Code** — 540
- **Mounting Options** — 201

Series 368

Total Number of Contacts	Connector Style
004	End Module
006	Centre Module

Contact Code	Description & Tail Size	Tail Length "G"
520	P.C. Tail .031 Square (0.79 Square)	.380 (9.65)
540	Wire Wrap .031 Square (0.79 Square)	.600(15.24)

Mounting Option 201

FEATURES

- .156 (3.96) Contact Spacing x .200 (5.08) Row Spacing
- Accepts .062 (1.57) Nominal Thickness P.C. Board
- High Profile Insulator Body, .630 (16.00)
- Press Fit Contact Termination Options include .031 (0.79) Square Wire Wrap & P.C. Tails
- Modular Design permits any Connector Length Assembly
- Accepts Between Contact and In-Contact Polarizing Keys

SPECIFICATIONS

- Insulator Material: Polyphenylene Sulphide, UL 94V-0, Colour: Green
- Contact Material: Phosphor Bronze Alloy CA-510
- Contact Plating: Gold over Nickel for Entire Contact
- Current Rating: 5 Amperes Continuous
- For Additional Specifications, Refer to 317 Series

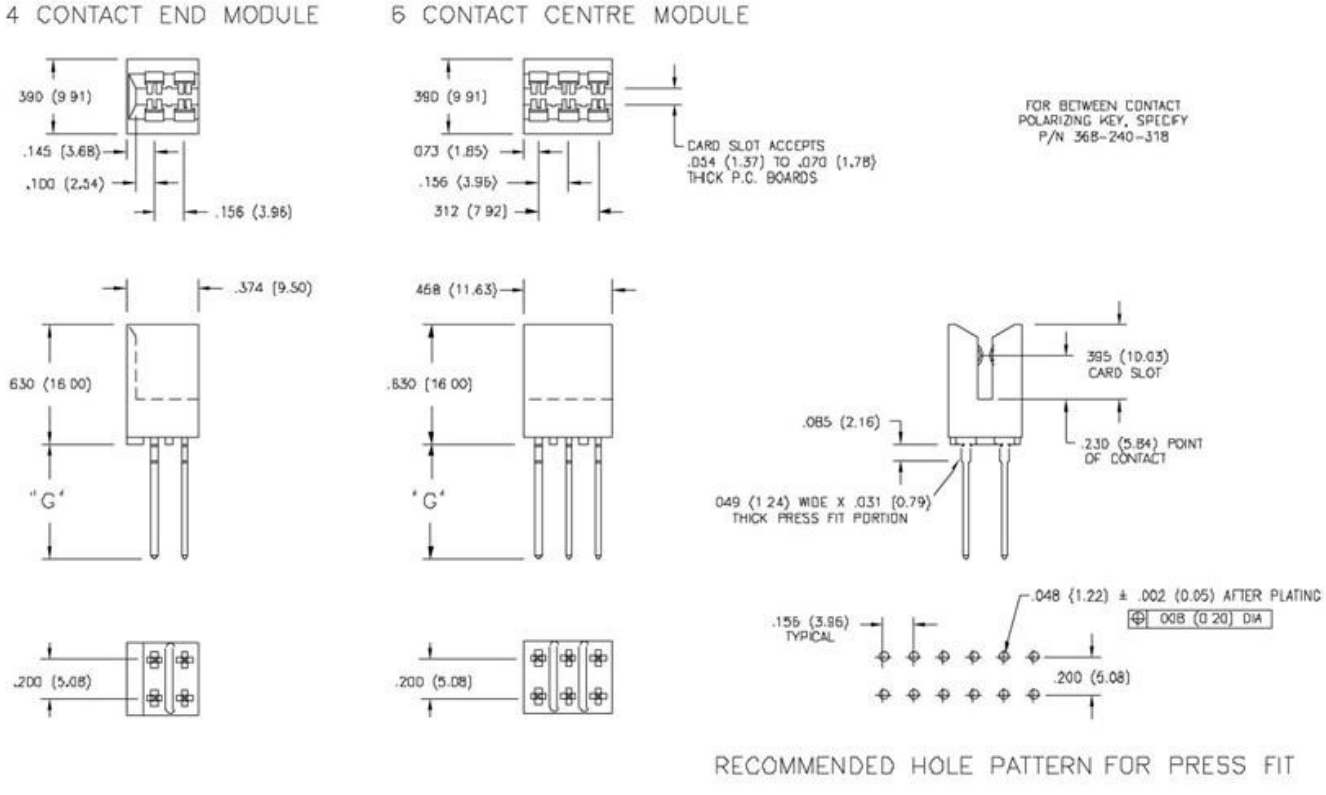

Downloaded from Elcodis.com electronic components distributor

CARD EDGE CONNECTOR SERIES 327

Accepts .125" (3.18mm) Thick Board, Contact Spacing .156" (3.96mm)

327 SERIES ORDERING CODE

Example Part Number 327 - 044 - 520 - 2 09

- **Series** — 327
- **Total Number of Contacts** — 044
- **Contact Code** — 520
- **Contact Rows** — 2
- **Mounting Options** — 09

Series 327

Total Number of Contacts	Contact Rows
022	Single Row
044	Dual Row

Contact Code	Description & Tail Size	Tail Length "G"
500	Wire Hole .050 x .025 (1.27 x 0.64)	.260 (6.60)
520	P.C. Tail .025 Square (0.64 Sauare)	.175 (4.45)
540	Wire Wrap .025 Square (0.64 Square)	.560(14.22)

Contact Rows	Description
1	Single Row
2	Dual Row

Mounting Options [1]	Description
01	No Mounting Lugs
09	.163 (4.14) Dia. Mounting Holes

Ordering Code Notes

1) For details of the mounting options, refer to page 63.

FEATURES

- .156 (3.96) Contact Spacing x .300 (7.62) Row Spacing
- Accepts .125 (3.18) Nominal Thickness P.C. Board
- High Profile Insulator Body, .600 (15.24)
- Contact Termination Options include P.C. Tail, Wire Hole & .025 (0.64) Square Wire Wrap
- Single or Dual Row Configurations
- Accepts In-Contact Polarizing Keys

SPECIFICATIONS

- Insulator Material: Polyphenylene Sulphide, 94V-0, Colour: Green
- Contact Material: Copper, Nickel, Tin Alloy CA-725
- Contact Plating: Gold on the Mating Area, Tin on the Contact Tails, Nickel Underplate
- Current Rating: 3 Amperes Continuous
- Dielectric Withstanding Voltage: 1800 V AC rms at Sea Level Between Adjacent Contacts
- For Additional Specifications, Refer to 325 Series

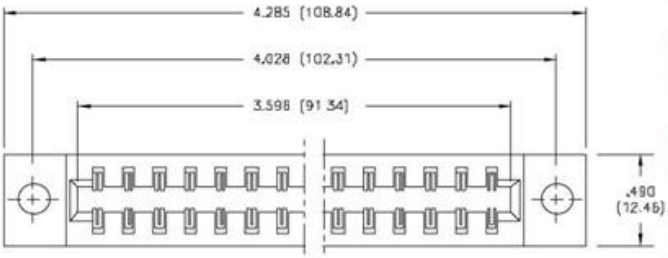

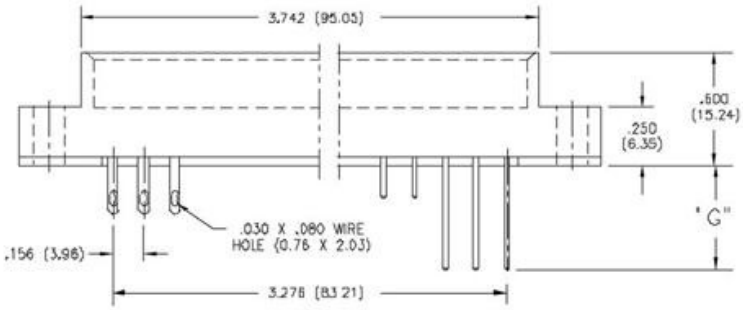

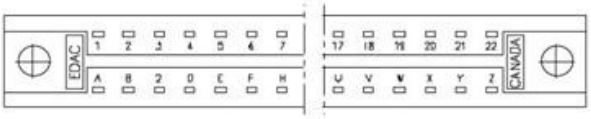

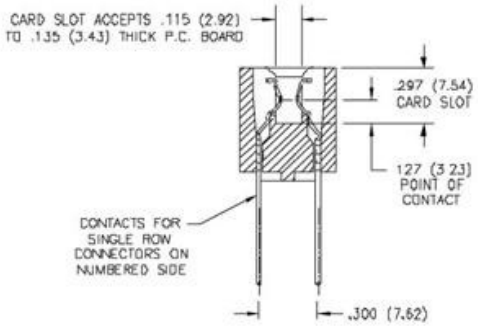

SECTION THROUGH CONTACT POSITION

FOR 327 SERIES CONNECTORS SPECIFY IN-CONTACT POLARIZING KEY P/N 325-240-328
CONSULT WITH EDAC REGARDING BETWEEN CONTACT POLARIZATION MOULDED INTO POSTION

Downloaded from Elcodis.com electronic components distributor

379 SERIES CARD EDGE CONNECTOR

.150" (3.81mm) Contact Spacing

FEATURES

- .150 (3.81) Contact Spacing x .200 (5.08) Row Spacing
- Accepts .062 (1.57) Nominal Thickness P.C. Board
- High Profile Insulator Body, .600 (15.24)
- Contact Termination Options include P.C. Tail, Wire Wrap & Extender Board Bends
- Single or Dual Row Configurations
- Variety of Mounting Options
- Accepts In-Contact Polarizing Keys

SPECIFICATIONS

- Insulator Material: Thermoplastic Polyester, UL 94V-0, Colour: Black
- Contact Material: Copper, Nickel, Tin Alloy CA-725
- Contact Plating: Gold on the Mating Area, Tin on the Contact Tails, Nickel Underplate
- Current Rating: 3 Amperes Continuous
- Contact Resistance: 10 Milliohms Maximum
- Dielectric Withstanding Voltage: 1800 V AC rms at Sea Level Between Adjacent Contacts
- Insulation Resistance: 5000 Megohms Minimum
- Operating Temperature: -65 to +105 Degrees C
- Insertion Force: 16 oz (4.45 N) Maximum per Contact Pair when Tested with a .070 (1.78) Thick Gauge
- Withdrawal Force: 1 oz (0.28 N) Minimum per Contact Pair when Tested with a .054 (1.37) Thick Gauge

379 SERIES ORDERING CODE

Example Part Number 379 - 040 - 520 - 2 08

- Series
- Total Number of Contacts
- Contact Code
- Contact Rows
- Mounting Options

Series 379

Total Number of Contacts	Contact Rows
020	Single Row
040	Dual Row

Contact Code [1, 2]		Description & Tail Size	Tail Length "G"
520	P.C. Tail	.030 x .018 (0.76 x 0.46)	.175 (4.45)
521	P.C. Tail	.025 Square (0.64 Square)	.150 (3.81)
523	P.C. Tail	.025 Square (0.64 Square)	.390 (9.91)
524	P.C. Tail	.018 Square (0.46 Square)	.175 (4.45)
540	Wire Wrap	.025 Square (0.64 Square)	.560(14.22)
541	Wire Wrap	.025 Square (0.64 Square)	.750(19.05)
542	Wire Wrap	.025 Square (0.64 Square)	.645(16.38)
544	Wire Wrap	.050 x .025 (1.27 x 0.64)	.750(19.05)
555	Extender Board Bend (Code 500 Contacts)		
556	Extender Board Bend (Code 520 Contacts)		
560	Extender Board Bend (Code 523 Contacts)		

Contact Rows	Description
1	Single Row
2	Dual Row

Mounting Options [3]	Description
01	No Mounting Lugs
02	.128 (3.25) Dia. Mounting Holes
03	.116 (2.95) I.D. Floating Eyelets
04	.156 (3.96) Dia. Mounting Holes
07	M3-0.5 Metric Threaded Inserts
08	#4-40 Unified Threaded Inserts

Ordering Code Notes

1) For details of the extender board bends, refer to page 61.
2) Consult with Edac regarding 90 degree bend availability.
3) For details of the mounting options, refer to page 63.

Downloaded from Elcodis.com electronic components distributor

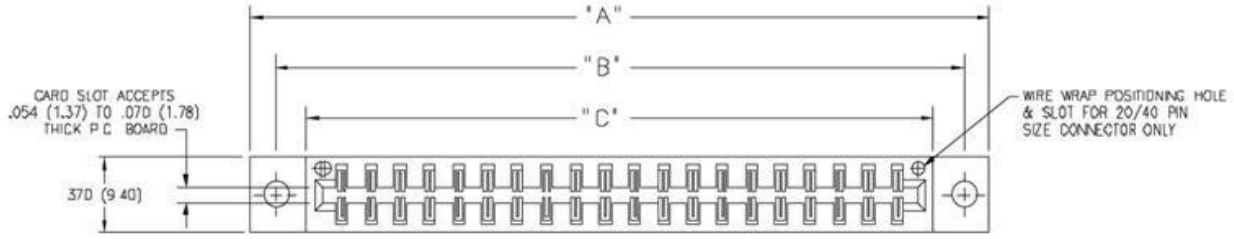

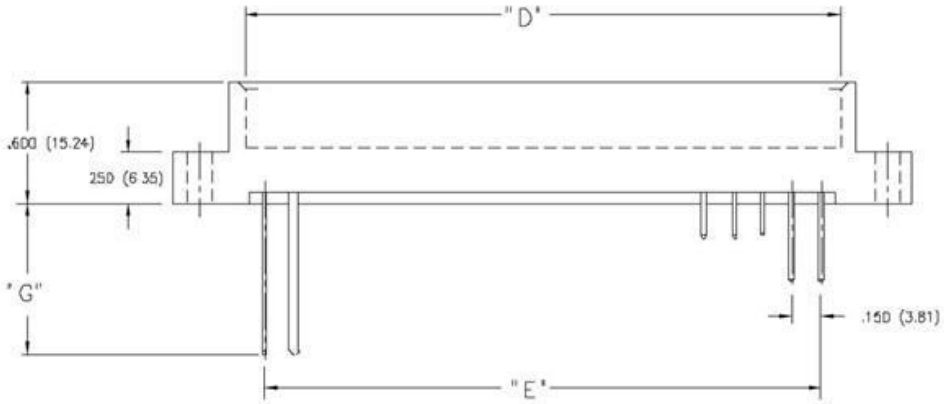

SECTION THROUGH CONTACT POSITION

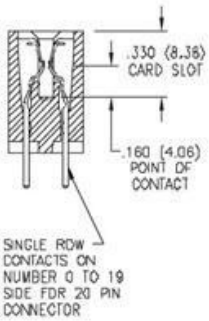

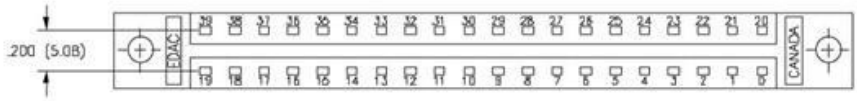

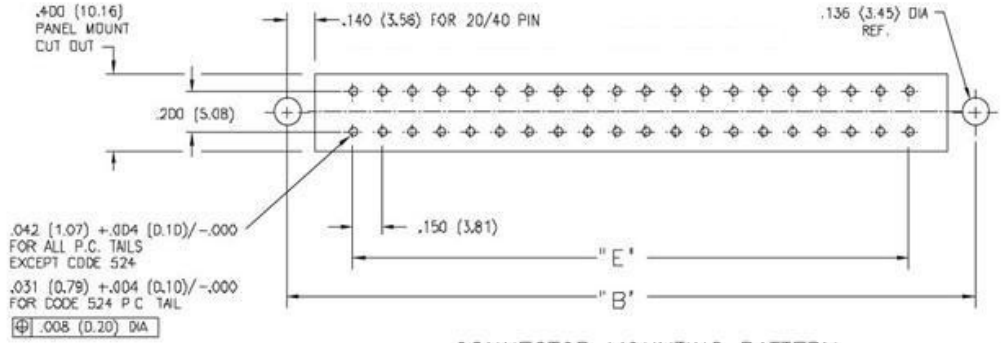

CONNECTOR MOUNTING PATTERN

IN-CONTACT POLARIZING KEY

P/N 345-240-328

CONSULT WITH EDAC REGARDING CONNECTORS WITH BETWEEN CONTACT POLARIZING KEY MOULDED INTO POSITION.

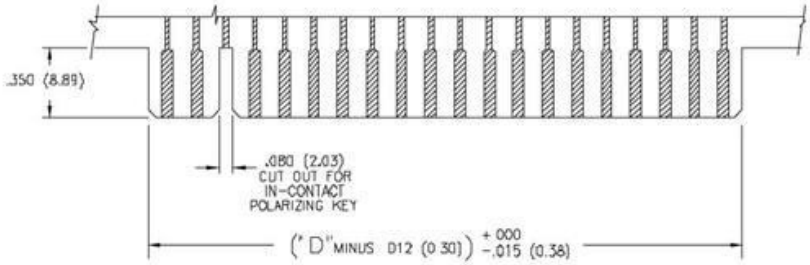

RECOMMENDED DAUGHTER BOARD

NUMBER OF CONTACTS		"A"		"B"		"C"		"D"		"E"		COMMENTS
Single	Dual	Inch	(mm)	Inch	(mm)	Inch	(mm)	Inch	(mm)	Inch	(mm)	
20	40	3.875	(98.43)	3.610	(91.69)	3.300	(83.82)	3.140	(79.76)	2.850	(72.39)	Position Numbers as Shown

Downloaded from Elcodis.com electronic components distributor

349 SERIES CARD EDGE CONNECTOR

.150" (3.81mm) Contact Spacing

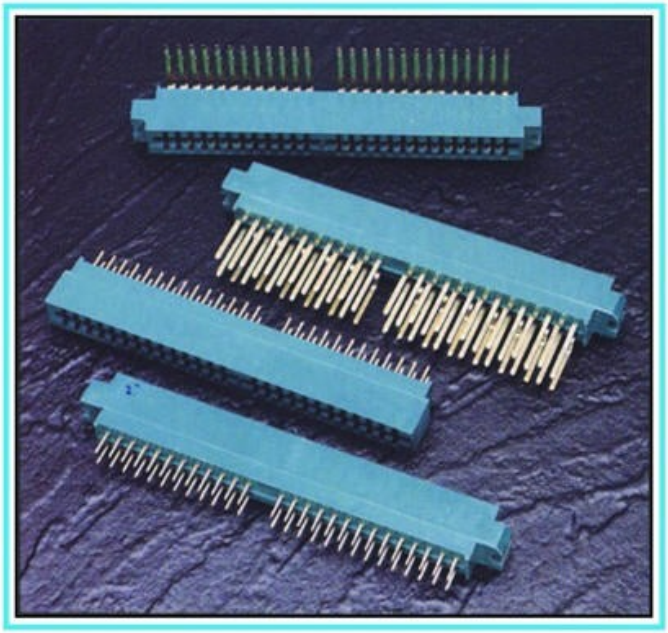

349 SERIES ORDERING CODE

Example Part Number 349 - 052 - 541 - 8 04

- **Series** — 349
- **Total Number of Contacts** — 052
- **Contact Code** — 541
- **Contact Rows** — 8
- **Mounting Options** — 04

Series 349

Total Number of Contacts	Contact Rows
026	Single Row
052	Dual Row

Contact Code	Description and Tail Size	Tail Length "G"
520	P.C. Tail .031 Square (0.79 Square)	.260 (6.60)
541	Wire Wrap .062 x .031 (1.57 x 0.79)	.750 (19.05)
558	90 Degree Bend (Code 541 Contacts)	
561	Staggered Tail Bend (Code 541 Contacts)	

Contact Rows	Description
6	Single Row
8	Dual Row

Mounting Options	Description
01	No Mounting Lugs
04	.152 (3.86) Wide Mounting Slots

FEATURES

- .150 (3.81) Contact Spacing x .188 (4.78) Row Spacing
- Accepts .062 (1.57) Nominal Thickness P.C. Board
- High Profile Insulator Body, .720 (18.29)
- Contact Termination Options include P.C. Tail, .062 (1.57) x .031(0.79) Wire Wrap, 90 Degree & Staggered Tail Bends
- Single or Dual Row Configurations
- Accepts Between Contact and In-Contact Polarizing Keys

SPECIFICATIONS

- Insulator Material: Polyphenylene Sulphide, UL 94V-0, Colour: Green
- Contact Material: Copper, Nickel, Tin Alloy CA-725
- Contact Plating: Gold Alloy Inlay over Nickel on the Mating Area
- Current Rating: 5 Amperes Continuous
- For Additional Specifications, Refer to 336 Series

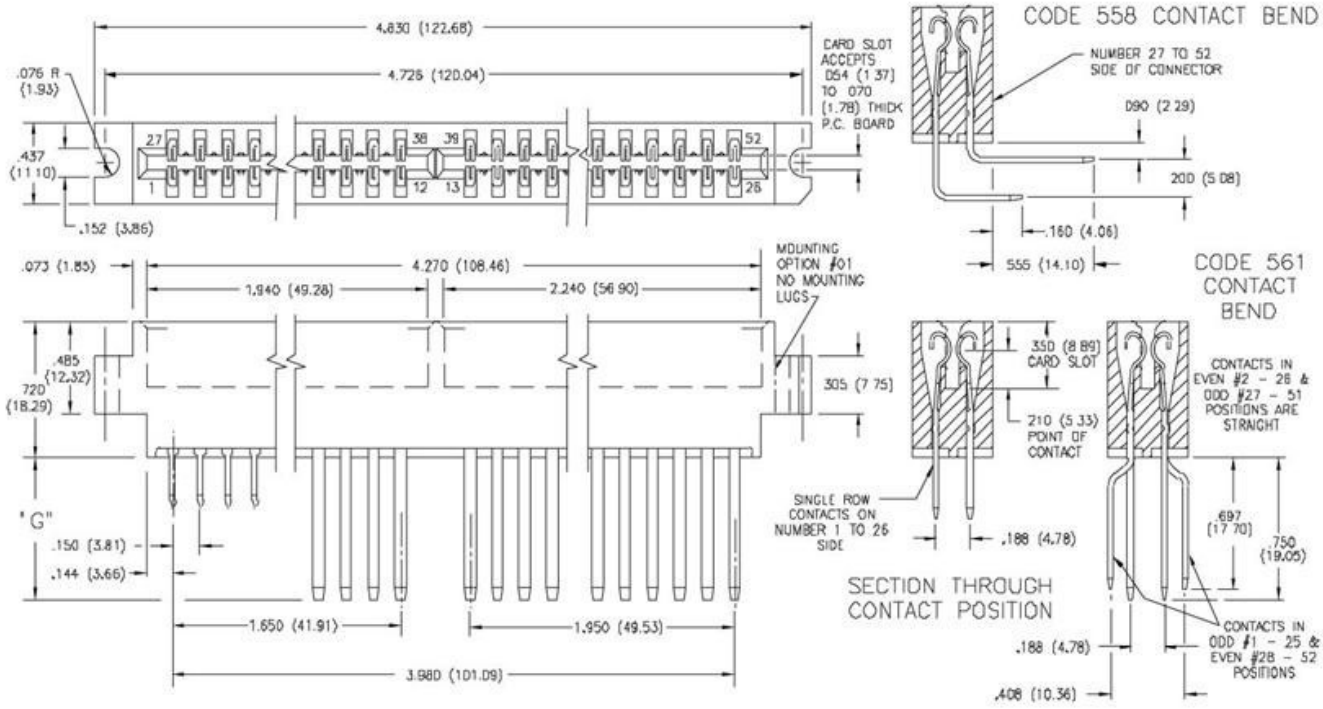

Downloaded from Elcodis.com electronic components distributor

384 SERIES ORDERING CODE

Example Part Number 334 - 018 - 525 - 102

- **Series** — 334
- **Total Number of Contacts** — 018
- **Contact Code** — 525
- **Mounting Options** — 102

Series 334

Total Number of Contacts 018

Contact Code [1]	Description & Tail Size	Tail Length "G"
505	Wire Hole .087 x .013 (2.21 x 0.33)	.282 (7.16)
525	P.C. Tail .046 x .013 (1.17 x 0.33)	.213 (5.41)
527	P.C. Tail .046 x .013 (1.17 x 0.33)	.358 (9.09)
531	P.C. Tail .023 x .013 (0.58 x 0.33)	.213 (5.41)
545	Wire Wrap .046 x .013 (1.17 x 0.33)	.520 (13.21)

Mounting Options [2]	Description
101	No Mounting Lugs
102	.128 (3.25) Dia. Mounting Holes
103	.116 (2.95) I.D. Floating Eyelets
104	.156 (3.96) Dia. Mounting Holes
107	M3-0.5 Metric Threaded Inserts
108	#4-40 Unified Threaded Inserts

Ordering Code Notes

1) For contacts with overall tin plating, change the first digit of the contact code from 5 to 4.
2) For details of the mounting options, refer to page 63.

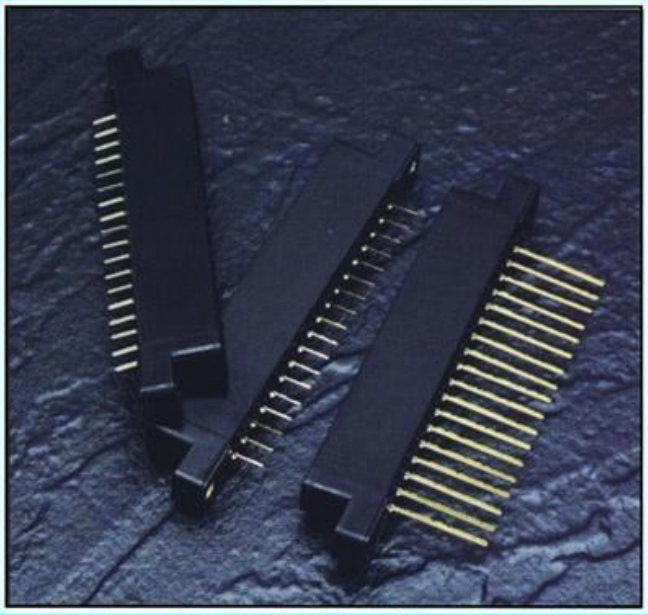

FEATURES

- UL Recognized
- .150 (3.81) Contact Spacing, Single Contact Row
- Accepts .062 (1.57) Nominal Thickness P.C. Board
- High Profile Insulator Body, .600 (15.24)
- Contact Termination Options include P.C. Tail, Wire Hole & Wire Wrap
- Variety of Mounting Options
- Accepts Between Contact Polarizing Keys

SPECIFICATIONS

- Insulator Material: Thermoplastic Polyester, UL 94V-0, Colour: Green
- Contact Material: Copper, Nickel, Tin Alloy CA-725
- Contact Plating: Gold on the Mating Area, Tin on the Contact Tails, Nickel Underplate
- Current Rating: 5 Amperes Continuous
- For Additional Specifications, Refer to 307/357 Series

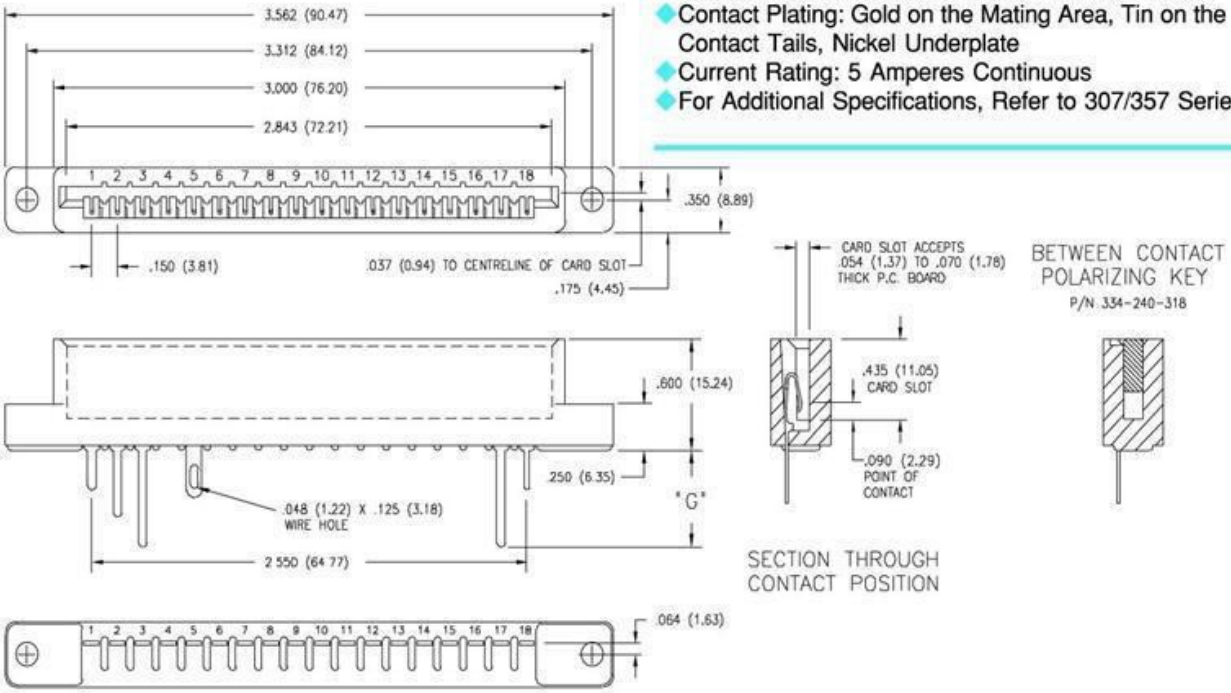

Downloaded from Elcodis.com electronic components distributor

243 SERIES CARD EDGE CONNECTOR

.200" (5.08mm) Contact Spacing

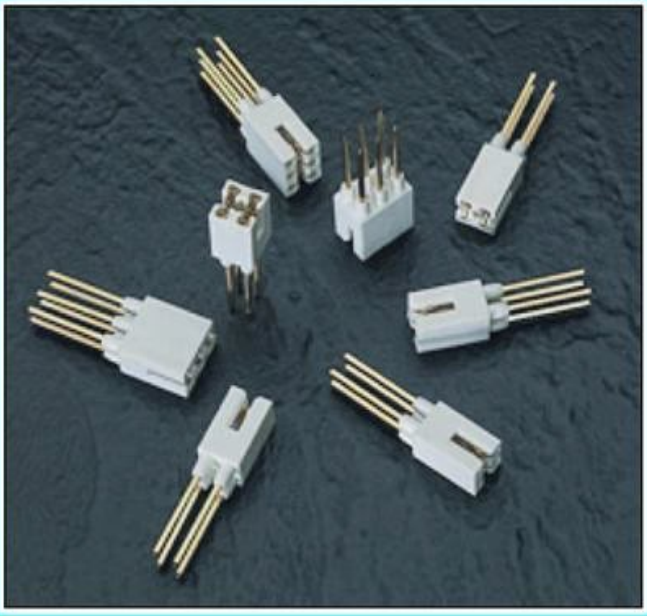

243 SERIES ORDERING CODE

Example Part Number 243 - 006 - 542 - 201

- **Series** — 243
- **Total Number of Contacts** — 006
- **Contact Code** — 542
- **Contact Rows** — 201

Series 243

Total Number of Contacts	Contact Rows
002 or 003	Single Row
004 or 006	Dual Row

Contact Code	Description & Tail Size	Tail Length "G"
542	Wire Wrap .045 Square (1.14 Square)	.650(16.51)

Contact Rows	Description
101	Single Row
201	Dual Row

FEATURES

- .200 (5.08) Contact Spacing x .200 (5.08) Row Spacing
- Accepts .062 (1.57) Nominal Thickness P.C. Board
- High Profile Insulator Body, .656 (16.66)
- Insulating Bushings Press into Metal Backplane
- Modular Design permits any Connector Length Assembly
- Contact Termination .045 (1.14) Square Wire Wrap
- Accepts Between Contact and In-Contact Polarizing Keys

SPECIFICATIONS

- Insulator Material: Thermoplastic Polyester, UL 94V-0, Colour: White
- Contact Material: Phosphor Bronze Alloy CA-510
- Contact Plating: Gold over Nickel for Entire Contact
- Current Rating: 5 Amperes Continuous
- Contact Resistance: 10 Milliohms Maximum
- Dielectric Withstanding Voltage: 1800 V AC rms at Sea Level Between Adjacent Contacts
- Insulation Resistance: 5000 Megohms Minimum
- Operating Temperature: -65 to +105 Degrees C
- Insertion Force: 16 oz (4.45 N) Maximum per Contact Pair when Tested with a .070 (1.78) Thick Gauge
- Withdrawal Force: 1 oz (0.28 N) Minimum per Contact Pair when Tested with a .054 (1.37) Thick Gauge

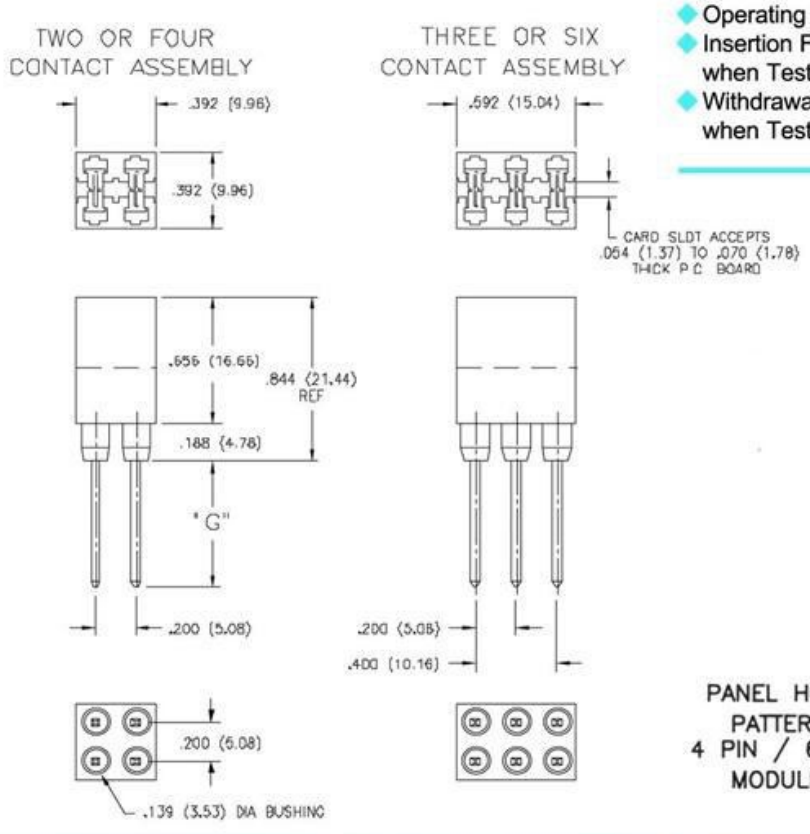

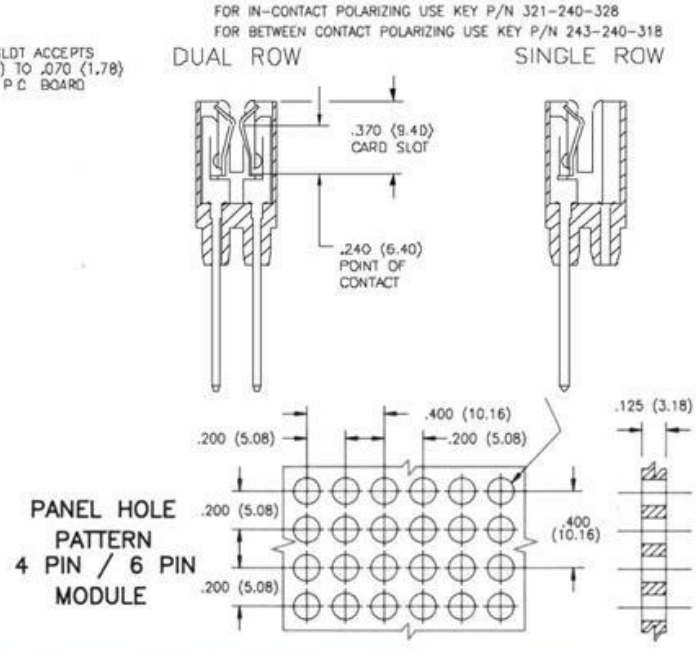

Downloaded from Elcodis.com electronic components distributor

SERIES 807

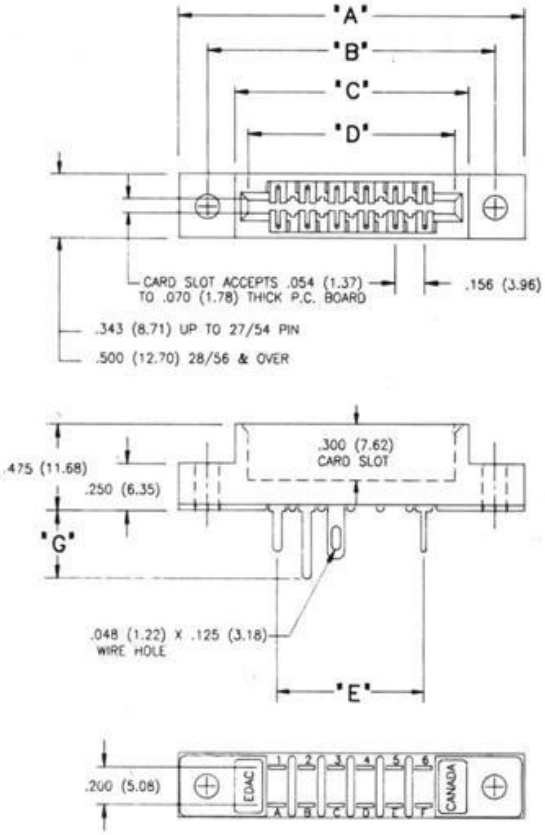

SERIES 842,845,846,837,833

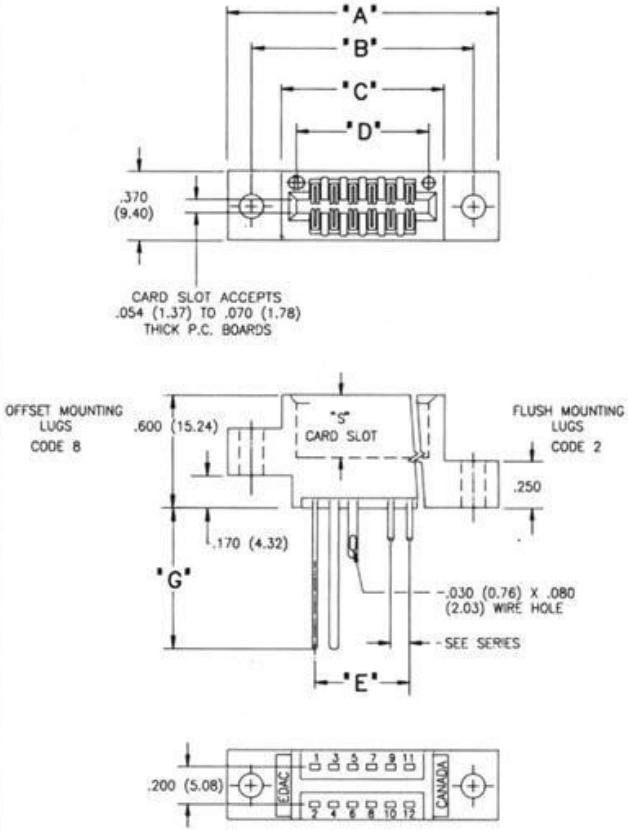

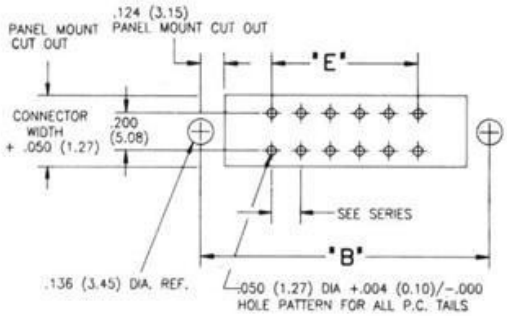

CONNECTOR MOUNTING PATTERN
ALL SERIES

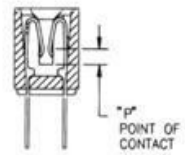

SECTION THROUGH 807 SERIES

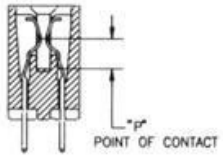

SECTION THROUGH 842,845,846 837,833 SERIES

PITCH		SERIES	DIMENSIONS	"S"		"P"	
.100	(2.54)	842	See chart for 342/392 on page 67	.410	(10.41)	.240	(6.10)
.100	(2.54)	845	See chart for 345/395 on page 67	.410	(10.41)	.240	(6.10)
.125	(2.54)	846	See chart for 346/396 on page 71	.330	(8.39)	.160	(4.06)
.156	(3.96)	837	See chart for 337 on page 69	.330	(8.39)	.160	(4.06)
.156	(3.96)	833	See chart for 333 on page 69	.388	(9.86)	.218	(5.43)
.156	(3.96)	807	See chart for 307 on page 69	.300	(7.62)	.095	(2.41)

Downloaded from Elcodis.com electronic components distributor

CONTACT TAIL BENDS - CARD EDGE CONNECTORS

Standard Bend Details

CONTACT CODE 553 - 90 DEGREE BEND

- Applicable for 307, 322 and 357 Series
- For 307 and 357 Series with .500 (12.70) Connector Width, Longer Contacts are Used and Cut to Length Indicated

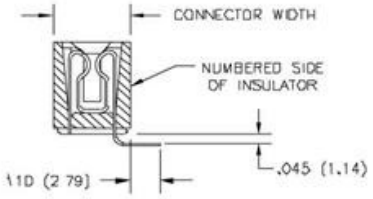

CONTACT CODE 553

CONTACT CODE 554 - 90 DEGREE BEND

- Applicable for 307, 322 and 357 Series
- This Bend is Not Recommended for 307 and 357 Series with .500 (12.70) Connector Width

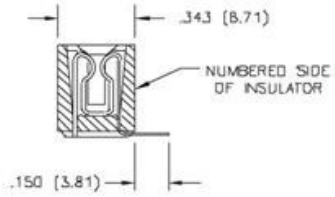

CONTACT CODE 554
BEND USES WIRE HOLE CONTACTS

CONTACT CODE 555 - EXTENDER BOARD BEND

Applicable Series	"A"
305, 307, 310, 315, 322, 355, 357	.265 (6.73)
333, 337, 340, 345, 346, 379, 387, 395, 395-AT, 396	.245 (6.22)
341, 391	.205 (5.21)
342, 392	.255 (6.48)

- For Contact Bend to Accept .125 (3.18) Thick Extender Board, Specify Contact Code 552

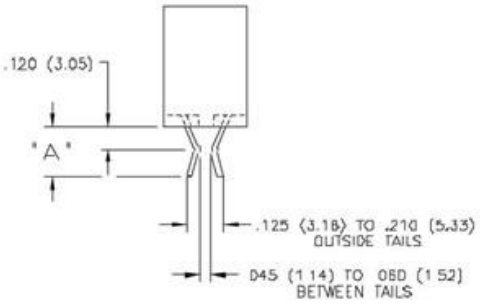

CONTACT CODE 555
BEND USES WIRE HOLE CONTACTS

CONTACT CODE 556 - EXTENDER BOARD BEND

Applicable Series	"A"
305, 307, 310, 315, 322, 355, 357	.195 (4.95)
333, 337, 340, 345, 346, 379, 387, 395, 395-AT, 396	.170 (4.32)
341, 391	.235 (5.97)
342, 392	.180 (4.57)

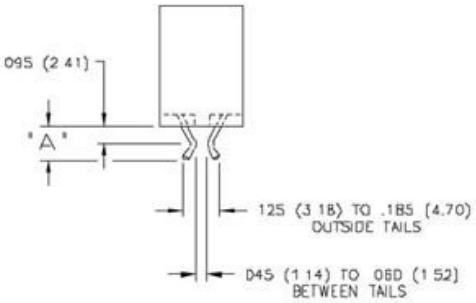

CONTACT CODE 556

Downloaded from Elcodis.com electronic components distributor

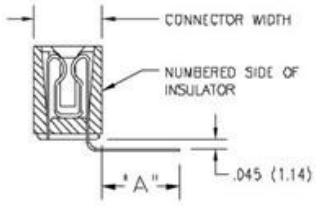

CONTACT CODE 557

CONTACT CODE 557 - 90 DEGREE BEND

Applicable Series	Connector Width	"A"
307, 322, 357	.343 (8.71)	.392 (9.96)
305, 357	.500 (12.70)	.314 (7.98)

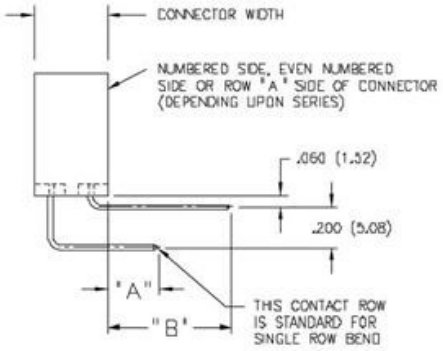

CONTACT CODE 558

CONTACT CODE 558 - 90 DEGREE BEND

Applicable Series	Connector Width	"A"	"B"
307, 322, 357	.343 (8.71)	.240 (6.10)	.240 (6.10)
307, 357	.500 (12.70)	.162 (4.11)	.162 (4.11)
333, 337, 340, 345, 387, 395, 395-AT	.370 (9.40)	.235 (5.97)	.635 (16.13)
342, 392	.370 (9.40)	.245 (6.22)	.645 (16.38)
346, 396	.370 (9.40)	.210 (5.33)	.660 (16.76)

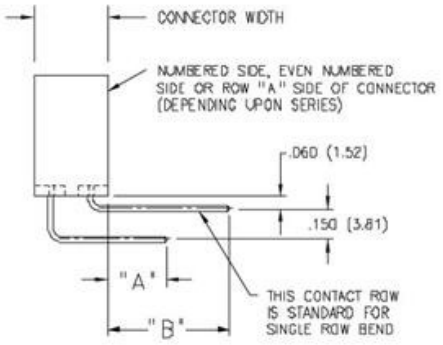

CONTACT CODE 559

CONTACT CODE 559 - 90 DEGREE BEND

Applicable Series	Connector Width	"A"	"B"
307, 322, 357	.343 (8.71)	.290 (7.37)	.240 (6.10)
307, 357	.500 (12.70)	.212 (5.38)	.162 (4.11)
333, 337, 340, 345, 387, 395, 395-AT	.370 (9.40)	.285 (7.24)	.635 (16.13)
342, 392	.370 (9.40)	.295 (7.49)	.645 (16.38)
346, 396	.370 (9.40)	.260 (6.60)	.660 (16.76)

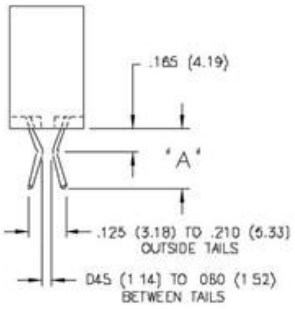

CONTACT CODE 560

CONTACT CODE 560 - EXTENDER BOARD BEND

Applicable Series	"A"
307, 310, 322, 357	.343(8.71)
333, 337, 340, 345, 379, 387, 395, 395-AT	.375(9.53)
341, 391	.365(9.27)
342, 392	.385(9.78)
346, 396	.335(8.51)

Downloaded from Elcodis.com electronic components distributor

MOUNTING OPTIONS - CARD EDGE CONNECTORS

Standard Mounting Details

CODE x01 - NO MOUNTING LUGS

- Applicable for 303, 305, 306, 307, 310, 315, 316, 317, 321, 325, 327, 333, 336, 337, 338, 340, 341, 342, 345, 346, 355, 356, 357, 379, 384, 387, 391, 392, 395 and 396 Series

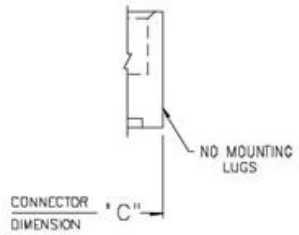

MOUNTING OPTION CODE x01

CODE x02, x04 & x09 - THROUGH MOUNTING HOLES

Applicable Series	Code x02 "A" Dia.	Code x04 "A" Dia.	Code x09 "A" Dia.
305, 306, 307, 310, 315,316, 321, 333, 337, 338, 340,341, 345,346, 355, 356, 357, 379, 384, 387,391, 395, 396	.128 (3.25)	.156 (3.96)	—
317, 323	.144 (3.66)	.156 (3.96)	—
325	—	—	.160 (4.06)
327	—	—	.163 (4.14)
342, 392	.128(3.25) x .146 (3.71) Slot	.156 (3.96)	—

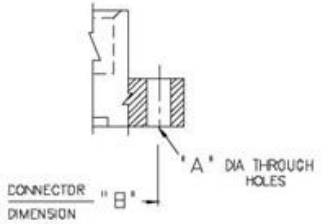

MOUNTING OPTION CODES x02, x04 & x09

CODE x03 - FLOATING EYELETS

Applicable Series	"A"
305, 306, 307, 310, 315, 316, 317, 321, 323, 333, 337, 338, 341, 345, 346, 355, 356, 357, 379, 384, 387, 391, 395, 396	.328 (8.33)
342, 392	.348 (8.84)

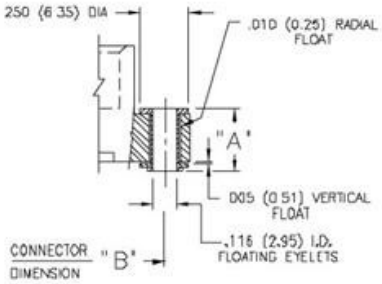

MOUNTING OPTION CODE x03

CODE x07 & x08 - THREADED INSERTS

- Applicable for 305, 306, 307, 310, 315, 316, 317, 321, 323, 325, 333, 337, 338, 341, 342, 345, 346, 356, 357, 379, 384, 387, 391, 392, 395 and 396 Series
- See Code x12 for Side Mounting Threaded Inserts

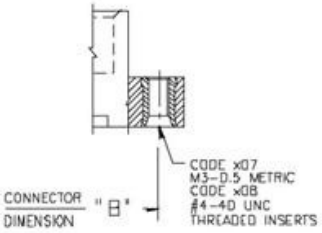

MOUNTING OPTION CODES x07 & x08

CODE x12 - SIDE MOUNTING HOLES

Applicable Series	"A"
307, 333, 337, 345, 346, 357, 387, 395, 396	.125 (3.18)
342, 392	.135 (3.43)

- Series Listed Above based on Availability of 90 Degree Bend Contact Tails. Side Mounting Holes may also be Used for Other Card Edge Connectors with a Lug Height of .250 (6.35) or Greater.
- For Side Mounting with Threaded Inserts, Specify Code x17 for M3-0.5 Metric Threads or Code x18 for #4-40 Unified Threads.

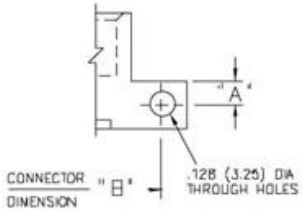

MOUNTING OPTION CODE x12

Downloaded from Elcodis.com electronic components distributor

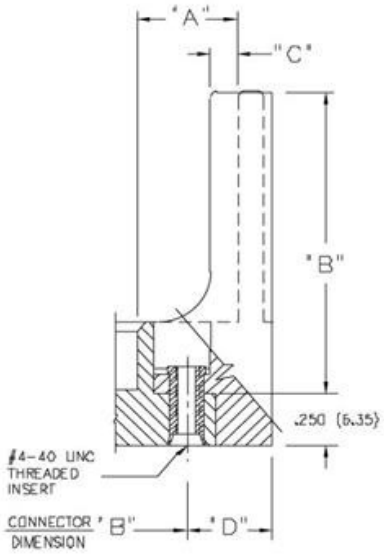

MOUNTING OPTION
CODES x58 & x68

CODE x58 & x68 - OFFSET CARD GUIDES

Applicable Series for Code x58 Guides	"A"	"B"	"C"	"D"
305, 306, 307, 315, 316, 337, 338, 355, 356, 357, 387	.468 (11.89)	2.755 (69.98)	.125 (3.18)	.423 (10.74)
345, 395	.468 (11.89)	2.755 (69.98)	.120 (3.05)	.402 (10.21)
346, 396	.468 (11.89)	2.755 (69.98)	.120 (3.05)	.398 (10.11)

Applicable Series for Code x68 Guides	"A"	"B"	"C"	"D"
305, 306, 307, 315, 316, 337, 338, 355, 356, 357, 387	.344 (8.74)	2.505 (63.63)	.060 (1.52)	.242 (6.15)

- For Card Guides with .128 (3.25) Dia. Through Hole Inserts, Specify Code x52 or x62.
- For Card Guides with M3-0.5 Metric Threaded Inserts, Specify Code x57 or x67.
- For Field Assembly of Card Guides, Refer to Page 72.

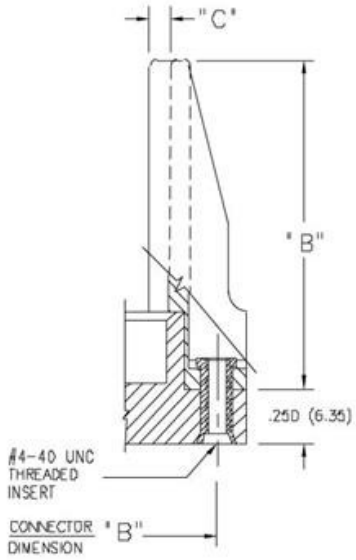

MOUNTING OPTION
CODES x78 & x88

CODE x78 & x88 - IN-LINE CARD GUIDES

Applicable Series for Code x78 Guides	"B"	"C"
305, 306, 307, 315, 316, 337, 338, 355, 356, 357, 387	1.550 (39.37)	.090 (2.29)
317	1.712 (43.48)	.110 (2.79)
345, 395	2.750 (69.85)	.083 (2.11)
346, 396	2.750 (69.85)	.091 (2.31)

Applicable Series for Code x88 Guides	"B"	"C"
345, 395	1.250 (31.75)	.083 (2.11)

- In-Line Card Guides are Not Suitable for the Flush Mounting Lug Versions of 337, 387, 346 or 396 Series
- For Card Guides with .128 (3.25) Dia. Through Hole Inserts, Specify Code x72 or x82.
- For Card Guides with M3-0.5 Metric Threaded Inserts, Specify Code x77 or x87
- For Field Assembly of Card Guides, Refer to Page 72.

Downloaded from Elcodis.com electronic components distributor

CARD GUIDES

243, 368 Series Card Guides

368 SERIES CARD GUIDE FEATURES

- Accepts .062 (1.57) Nominal Thickness P.C. Board
- Stand-Alone Guide with "Back to Back" Board Slots
- Through Mounting Holes for #4 or M3 Screws or #6 Self-Threading Screws

SPECIFICATIONS

- Guide Material: Thermoplastic Polyester, UL 94V-0, Colour: Green
- Operating Temperature: -65 to +105 Degrees C

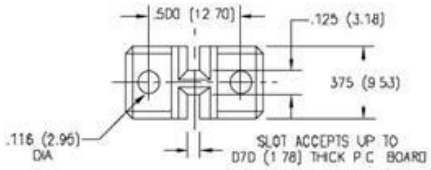

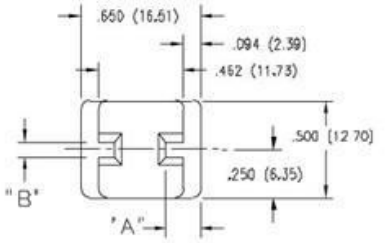

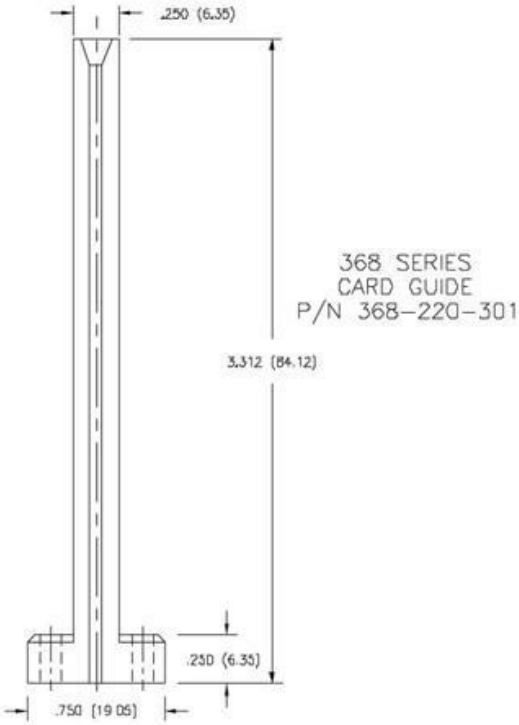

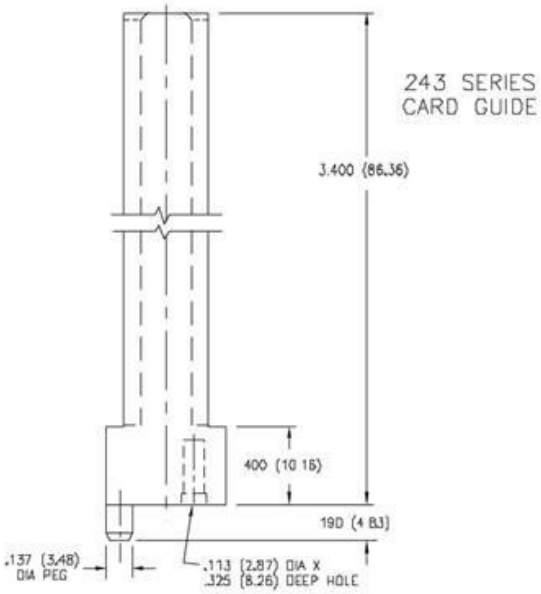

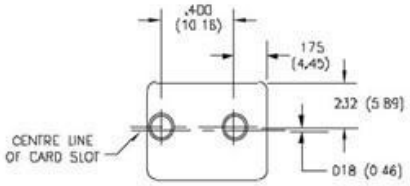

243 SERIES CARD GUIDE FEATURES

- Accepts .062 (1.57) or .250 (6.35) Nominal Thickness P.C.Board
- Stand-Alone Guide with "Back to Back" Board Slots
- Mounting Peg and Hole for #5 Self-Threading Screw

SPECIFICATIONS

- Guide Material: Polycarbonate, Colour: Grey
- Operating Temperature: -65 to +105 Degrees C

243 SERIES CARD GUIDE DIMENSIONS

PartNumber	"A"	"B"(Accepts Nominal P.C.Board)
243-220-301	.187 (4.75)	.062 (1.57) Thick
243-220-302	.237 (6.02)	.250 (6.35) Thick

Downloaded from Elcodis.com electronic components distributor

307/317/345/346 SERIES CARD GUIDE FEATURES

- Accepts .062 (1.57) Nominal Thickness P.C. Board
- For Field Assembly of Card Guides to a Connector with Code 04 Mounting - .156 (3.96) Dia. Mounting Holes. Use an Alignment Bushing Part Number 345-250-442-102, a Hex or Round Head Screw, Washer and Nut to hold the Assembly to a Circuit Board.

SPECIFICATIONS

- Guide Material: Thermoplastic Polyester, UL94V-0, Colour: Green, Black Colour Available Upon Request
- Operating Temperature: -65 to +105 Degrees C

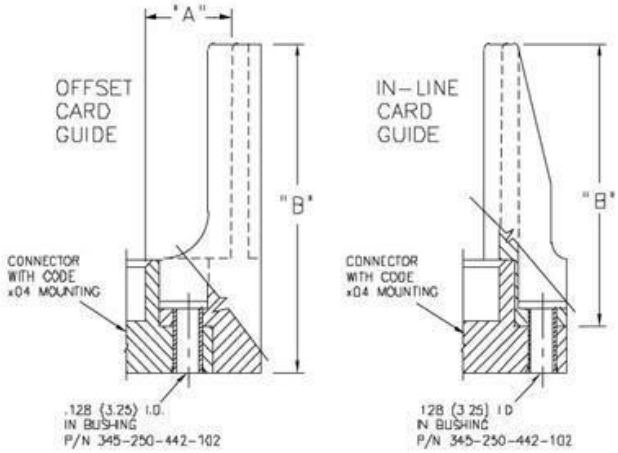

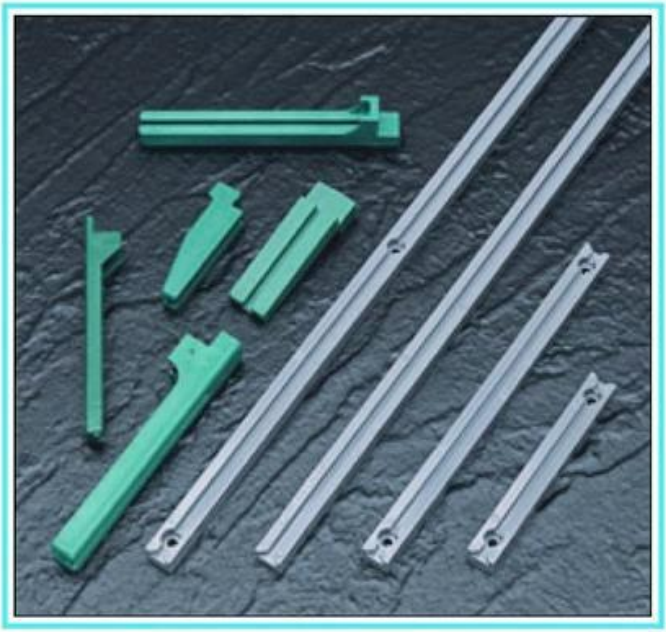

307/317/345/346 SERIES CARD GUIDES

Part Number	Style	"A"	"B"	Used for Connector Series
307-220-058	Offset	.468 (11.89)	3.000 (76.20)	305, 306, 307, 315,
307-220-068	Offset	.344 (8.74)	2.750 (69.85)	316, 337, 338, 355,
307-220-078	In-Line	— —	1.550 (39.37)	356, 357, 387
317-220-078	In-Line	— —	1.712 (43.48)	317
345-220-058	Offset	.468 (11.89)	3.000 (76.20)	345, 395
345-220-078	In-Line	— —	2.750 (69.85)	
345-220-088	In-Line	— —	1.250 (31.75)	
346-220-058	Offset	.468 (11.89)	3.000 (76.20)	346, 396
346-220-078	In-Line	— —	2.750 (69.85)	

Notes for Card Guides Chart

1) Card guide part number 307-220-078 is not suitable for 337 or 387 series connectors with flush mounting lugs.

2) Card guide part number 346-220-078 is not suitable for 346 or 396 series connectors with flush mounting lugs.

616 SERIES UNI-GUIDE FEATURES

- Variety of Sizes for Equipment Design Flexibility
- Accepts .062 (1.57) Nominal Thickness P.C. Board
- Supports P.C. Board and Provides Board to Connector Alignment
- May be Installed in a "Back to Back" Configuration
- Easy Installation Using .093 (2.36) Dia. Eyelets or Pop Rivets or Two Sided Tape (Very High Bond)

SPECIFICATIONS

- Uni-Guide Material: Polycarbonate, Colour: Grey
- Operating Temperature: -65 to +105 Degrees C

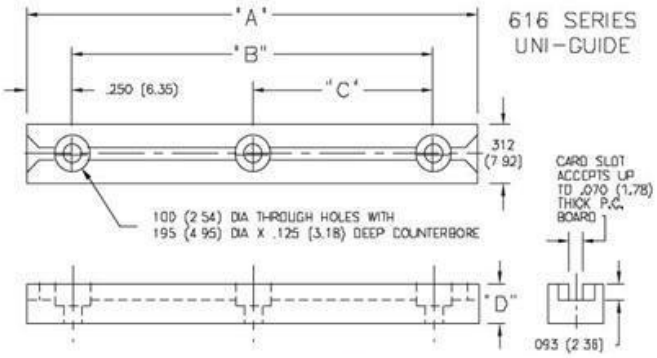

616 SERIES UNI-GUIDES

Part Number	"A"	"B"	"C"	"D"	Mounting Holes
616-220-301	6.375 (161.92)	5.875 (149.23)	— —	.218 (5.54)	2
616-220-302	2.500 (63.50)	2.000 (50.80)	— —	.218 (5.54)	2
616-220-303	4.500 (114.30)	4.000 (101.60)	— —	.218 (5.54)	2
616-220-304	5.500 (139.70)	5.000 (127.00)	— —	.218 (5.54)	2
616-220-305	8.000 (203.20)	7.500 (190.50)	3.750 (95.25)	.218 (5.54)	3
616-220-306	9.000 (228.60)	8.500 (215.90)	4.250 (107.95)	.218 (5.54)	3
616-220-307	11.000 (279.40)	10.500 (266.70)	5.250 (133.35)	.218 (5.54)	3
616-220-310	9.000 (228.60)	— —	— —	.141 (3.58)	0
616-220-311	9.000 (228.60)	— —	— —	.205 (5.21)	0
616-220-313	11.000 (279.40)	10.500 (266.70)	5.250 (133.35)	.205 (5.21)	3

Downloaded from Elcodis.com electronic components distributor

.100" (2.54mm) CONTACT SPACING CONNECTOR DIMENSIONS

325, 340, 341, 342, 345, 391, 392, 395, 745 Series Card Edge Connectors

DIMENSION		"A"										"B"							
SERIES		325		340		341, 391		342, 392		345, 395		325		340		341, 391 345, 395		342, 392	
Number of Contacts Single	Dual	Inch	(mm)	Inch	(mm)	Inch	(mm)	Inch	(mm)	Inch	(mm)	Inch	(mm)	Inch	(mm)	Inch	(mm)	Inch	(mm)
5	10	1.355	(34.42)	1.900	(48.26)	1.375	(34.93)	1.300	(33.02)	1.335	(33.91)	1.056	(26.82)	1.400	(35.56)	1.075	(27.31)	1.022	(25.96)
6	12	1.455	(36.96)	2.000	(50.80)	1.475	(37.47)	1.400	(35.56)	1.435	(36.45)	1.156	(29.36)	1.500	(38.10)	1.175	(29.85)	1.122	(28.50)
7	14	1.555	(39.50)	2.100	(53.34)	1.575	(40.01)	1.500	(38.10)	1.535	(38.99)	1.256	(31.90)	1.600	(40.64)	1.275	(32.39)	1.222	(31.04)
8	16	1.655	(42.04)	2.200	(55.88)	1.675	(42.55)	1.600	(40.64)	1.635	(41.53)	1.356	(34.44)	1.700	(43.18)	1.375	(34.93)	1.322	(33.58)
9	18	1.755	(44.58)	2.300	(58.42)	1.775	(45.09)	1.700	(43.18)	1.735	(44.07)	1.456	(36.98)	1.800	(45.72)	1.475	(37.47)	1.422	(36.12)
10	20	1.855	(47.12)	2.400	(60.96)	1.875	(47.63)	1.800	(45.72)	1.835	(46.61)	1.556	(39.52)	1.900	(48.26)	1.575	(40.01)	1.522	(38.66)
11	22	1.955	(49.66)	2.500	(63.50)	1.975	(50.17)	1.900	(48.26)	1.935	(49.15)	1.656	(42.06)	2.000	(50.80)	1.675	(42.55)	1.622	(41.20)
12	24	2.055	(52.20)	2.600	(66.04)	2.075	(52.71)	2.000	(50.80)	2.035	(51.69)	1.756	(44.60)	2.100	(53.34)	1.775	(45.09)	1.722	(43.74)
13	26	2.155	(54.74)	2.700	(68.58)	2.175	(55.25)	2.100	(53.34)	2.135	(54.23)	1.856	(47.14)	2.200	(55.88)	1.875	(47.63)	1.822	(46.28)
14	28	2.255	(57.28)	2.800	(71.12)	2.275	(57.79)	2.200	(55.88)	2.235	(56.77)	1.956	(49.68)	2.300	(58.42)	1.975	(50.17)	1.922	(48.82)
15	30	2.355	(59.82)	2.900	(73.66)	2.375	(60.33)	2.300	(58.42)	2.335	(59.31)	2.056	(52.22)	2.400	(60.96)	2.075	(52.71)	2.022	(51.36)
16	32	2.455	(62.36)	3.000	(76.20)	2.475	(62.87)	2.400	(60.96)	2.435	(61.85)	2.156	(54.76)	2.500	(63.50)	2.175	(55.25)	2.122	(53.90)
17	34	2.555	(64.90)	3.100	(78.74)	2.575	(65.41)	2.500	(63.50)	2.535	(64.39)	2.256	(57.30)	2.600	(66.04)	2.275	(57.79)	2.222	(56.44)
18	36	2.655	(67.44)	3.200	(81.28)	2.675	(67.95)	2.600	(66.04)	2.635	(66.93)	2.356	(59.84)	2.700	(68.58)	2.375	(60.33)	2.322	(58.98)
19	38	2.755	(69.98)	3.300	(83.82)	2.775	(70.49)	2.700	(68.58)	2.735	(69.47)	2.456	(62.38)	2.800	(71.12)	2.475	(62.87)	2.422	(61.52)
20	40	2.855	(72.52)	3.400	(86.36)	2.875	(73.03)	2.800	(71.12)	2.835	(72.01)	2.556	(64.92)	2.900	(73.66)	2.575	(65.41)	2.522	(64.06)
21	42	2.955	(75.06)	3.500	(88.90)	2.975	(75.57)	2.900	(73.66)	2.935	(74.55)	2.656	(67.46)	3.000	(76.20)	2.675	(67.95)	2.622	(66.60)
22	44	3.055	(77.60)	3.600	(91.44)	3.075	(78.11)	3.000	(76.20)	3.035	(77.09)	2.756	(70.00)	3.100	(78.74)	2.775	(70.49)	2.722	(69.14)
23	46	3.155	(80.14)	3.700	(93.98)	3.175	(80.65)	3.100	(78.74)	3.135	(79.63)	2.856	(72.54)	3.200	(81.28)	2.875	(73.03)	2.822	(71.68)
24	48	3.255	(82.68)	3.800	(96.52)	3.275	(83.19)	3.200	(81.28)	3.235	(82.17)	2.956	(75.08)	3.300	(83.82)	2.975	(75.57)	2.922	(74.22)
25	50	3.355	(85.22)	3.900	(99.06)	3.375	(85.73)	3.300	(83.82)	3.335	(84.71)	3.056	(77.62)	3.400	(86.36)	3.075	(78.11)	3.022	(76.76)
26	52	3.455	(87.76)	4.000	(101.60)	3.475	(88.27)	3.400	(86.36)	3.435	(87.25)	3.156	(80.16)	3.500	(88.90)	3.175	(80.65)	3.122	(79.30)
27	54	3.555	(90.30)	4.100	(104.14)	3.575	(90.81)	3.500	(88.90)	3.535	(89.79)	3.256	(82.70)	3.600	(91.44)	3.275	(83.19)	3.222	(81.84)
28	56	3.655	(92.84)	4.200	(106.68)	3.675	(93.35)	3.600	(91.44)	3.635	(92.33)	3.356	(85.24)	3.700	(93.98)	3.375	(85.73)	3.322	(84.38)
29	58	3.755	(95.38)	4.300	(109.22)	3.775	(95.89)	3.700	(93.98)	3.735	(94.87)	3.456	(87.78)	3.800	(96.52)	3.475	(88.27)	3.422	(86.92)
30	60	3.855	(97.92)	4.400	(111.76)	3.875	(98.43)	3.800	(96.52)	3.835	(97.41)	3.556	(90.32)	3.900	(99.06)	3.575	(90.81)	3.522	(89.46)
31	62	3.955	(100.46)	4.500	(114.30)	3.975	(100.97)	3.900	(99.06)	3.935	(99.95)	3.656	(92.86)	4.000	(101.60)	3.675	(93.35)	3.622	(92.00)
32	64	4.055	(103.00)	4.600	(116.84)	4.075	(103.51)	4.000	(101.60)	4.035	(102.49)	3.756	(95.40)	4.100	(104.14)	3.775	(95.89)	3.722	(94.54)
33	66	4.155	(105.54)	4.700	(119.38)	4.175	(106.05)	4.100	(104.14)	4.135	(105.03)	3.856	(97.94)	4.200	(106.68)	3.875	(98.43)	3.822	(97.08)
34	68	4.255	(108.08)	4.800	(121.92)	4.275	(108.59)	4.200	(106.68)	4.235	(107.57)	3.956	(100.48)	4.300	(109.22)	3.975	(100.97)	3.922	(99.62)
35	70	4.355	(110.62)	4.900	(124.46)	4.375	(111.13)	4.300	(109.22)	4.335	(110.11)	4.056	(103.02)	4.400	(111.76)	4.075	(103.51)	4.022	(102.16)
36	72	4.455	(113.16)	5.000	(127.00)	4.475	(113.67)	4.400	(111.76)	4.435	(112.65)	4.156	(105.56)	4.500	(114.30)	4.175	(106.05)	4.122	(104.70)
37	74	4.555	(115.70)	5.100	(129.54)	4.575	(116.21)	4.500	(114.30)	4.535	(115.19)	4.256	(108.10)	4.600	(116.84)	4.275	(108.59)	4.222	(107.24)
38	76	4.655	(118.24)	5.200	(132.08)	4.675	(118.75)	4.600	(116.84)	4.635	(117.73)	4.356	(110.64)	4.700	(119.38)	4.375	(111.13)	4.322	(109.78)
39	78	4.755	(120.78)	5.300	(134.62)	4.775	(121.29)	4.700	(119.38)	4.735	(120.27)	4.456	(113.18)	4.800	(121.92)	4.475	(113.67)	4.422	(112.32)
40	80	4.855	(123.32)	5.400	(137.16)	4.875	(123.83)	4.800	(121.92)	4.835	(122.81)	4.556	(115.72)	4.900	(124.46)	4.575	(116.21)	4.522	(114.86)
41	82	4.955	(125.86)	5.500	(139.70)	4.975	(126.37)	4.900	(124.46)	4.935	(125.35)	4.656	(118.26)	5.000	(127.00)	4.675	(118.75)	4.622	(117.40)
42	84	5.055	(128.40)	5.600	(142.24)	5.075	(128.91)	5.000	(127.00)	5.035	(127.89)	4.756	(120.80)	5.100	(129.54)	4.775	(121.29)	4.722	(119.94)
43	86	5.155	(130.94)	5.700	(144.78)	5.175	(131.45)	5.100	(129.54)	5.135	(130.43)	4.856	(123.34)	5.200	(132.08)	4.875	(123.83)	4.822	(122.48)
44	88	5.255	(133.48)	5.800	(147.32)	5.275	(133.99)	5.200	(132.08)	5.235	(132.97)	4.956	(125.88)	5.300	(134.62)	4.975	(126.37)	4.922	(125.02)
45	90	5.355	(136.02)	5.900	(149.86)	5.375	(136.53)	5.300	(134.62)	5.335	(135.51)	5.056	(128.42)	5.400	(137.16)	5.075	(128.91)	5.022	(127.56)
46	92	5.455	(138.56)	6.000	(152.40)	5.475	(139.07)	5.400	(137.16)	5.435	(138.05)	5.156	(130.96)	5.500	(139.70)	5.175	(131.45)	5.122	(130.10)
47	94	5.555	(141.10)	6.100	(154.94)	5.575	(141.61)	5.500	(139.70)	5.535	(140.59)	5.256	(133.50)	5.600	(142.24)	5.275	(133.99)	5.222	(132.64)
48	96	5.655	(143.64)	6.200	(157.48)	5.675	(144.15)	5.600	(142.24)	5.635	(143.13)	5.356	(136.04)	5.700	(144.78)	5.375	(136.53)	5.322	(135.18)
49	98	5.755	(146.18)	6.300	(160.02)	5.775	(146.69)	5.700	(144.78)	5.735	(145.67)	5.456	(138.58)	5.800	(147.32)	5.475	(139.07)	5.422	(137.72)
50	100	5.855	(148.72)	6.400	(162.56)	5.875	(149.23)	5.800	(147.32)	5.835	(148.21)	5.556	(141.12)	5.900	(149.86)	5.575	(141.61)	5.522	(140.26)
51	102	5.955	(151.26)	6.500	(165.10)	5.975	(151.77)	5.900	(149.86)	5.935	(150.75)	5.656	(143.66)	6.000	(152.40)	5.675	(144.15)	5.622	(142.80)
52	104	6.055	(153.80)	6.600	(167.64)	6.075	(154.31)	6.000	(152.40)	6.035	(153.29)	5.756	(146.20)	6.100	(154.94)	5.775	(146.69)	5.722	(145.34)
53	106	6.155	(156.34)	6.700	(170.18)	6.175	(156.85)	6.100	(154.94)	6.135	(155.83)	5.856	(148.74)	6.200	(157.48)	5.875	(149.23)	5.822	(147.88)
54	108	6.255	(158.88)	6.800	(172.72)	6.275	(159.39)	6.200	(157.48)	6.235	(158.37)	5.956	(151.28)	6.300	(160.02)	5.975	(151.77)	5.922	(150.42)
55	110	6.355	(161.42)	6.900	(175.26)	6.375	(161.93)	6.300	(160.02)	6.335	(160.91)	6.056	(153.82)	6.400	(162.56)	6.075	(154.31)	6.022	(152.96)
56	112	6.455	(163.96)	7.000	(177.80)	6.475	(164.47)	6.400	(162.56)	6.435	(163.45)	6.156	(156.36)	6.500	(165.10)	6.175	(156.85)	6.122	(155.50)
57	114	6.555	(166.50)	7.100	(180.34)	6.575	(167.01)	6.500	(165.10)	6.535	(165.99)	6.256	(158.90)	6.600	(167.64)	6.275	(159.39)	6.222	(158.04)
58	116	6.655	(169.04)	7.200	(182.88)	6.675	(169.55)	6.600	(167.64)	6.635	(168.53)	6.356	(161.44)	6.700	(170.18)	6.375	(161.93)	6.322	(160.58)
59	118	6.755	(171.58)	7.300	(185.42)	6.775	(172.09)			6.735	(171.07)	6.456	(163.98)	6.800	(172.72)	6.475	(164.47)		
60	120	6.855	(174.12)	7.400	(187.96)	6.875	(174.63)			6.835	(173.61)	6.556	(166.52)	6.900	(175.26)	6.575	(167.01)		
61	122	6.955	(176.66)							6.935	(176.15)	6.656	(169.06)			6.675	(169.55)		
62	124									7.035	(178.69)					6.775	(172.09)		
63	126									7.135	(181.23)					6.875	(174.63)		
64	128									7.235	(183.77)					6.975	(177.17)		
65	130									7.335	(186.31)					7.075	(179.71)		
66	132									7.435	(188.85)					7.175	(182.25)		
67	134									7.535	(191.39)					7.275	(184.79)		
68	136									7.635	(193.93)					7.375	(187.33)		
69	138									7.735	(196.47)					7.475	(189.87)		
70	140									7.835	(199.01)					7.575	(192.41)		
71	142									7.935	(201.55)					7.675	(194.95)		
72	144									8.035	(204.09)					7.775	(197.49)		
73	146																		
74	148																		
75	150																		

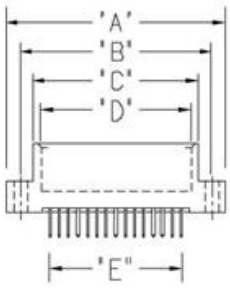

Downloaded from Elcodis.com electronic components distributor

CONNECTOR DIMENSIONS CONTACT SPACING .100" (2.54mm)

Card Edge Connector Series 325, 340, 341, 342, 345, 391, 392, 395, 745

DIMENSION		"C"										"D"				"E"	
SERIES		325		340		341, 391		342, 392		345, 395 745		340		REST OF SERIES		ALL SERIES	
Number of Contacts Single	Dual	Inch	(mm)	Inch	(mm)	Inch	(mm)	Inch	(mm)	Inch	(mm)	Inch	(mm)	Inch	(mm)	Inch	(mm)
5	10	.722	(18.34)	.965	(24.51)	.775	(19.69)	.746	(18.95)	.760	(19.30)	.610	(15.49)	.600	(15.24)	.400	(10.16)
6	12	.822	(20.88)	1.065	(27.05)	.875	(22.23)	.846	(21.49)	.860	(21.84)	.710	(18.03)	.700	(17.78)	.500	(12.70)
7	14	.922	(23.42)	1.165	(29.59)	.975	(24.77)	.946	(24.03)	.960	(24.38)	.810	(20.57)	.800	(20.32)	.600	(15.24)
8	16	1.022	(25.96)	1.265	(32.13)	1.075	(27.31)	1.046	(26.57)	1.060	(26.92)	.910	(23.11)	.900	(22.86)	.700	(17.78)
9	18	1.122	(28.50)	1.365	(34.67)	1.175	(29.85)	1.146	(29.11)	1.160	(29.46)	1.010	(25.65)	1.000	(25.40)	.800	(20.32)
10	20	1.222	(31.04)	1.465	(37.21)	1.275	(32.39)	1.246	(31.65)	1.260	(32.00)	1.110	(28.19)	1.100	(27.94)	.900	(22.86)
11	22	1.322	(33.58)	1.565	(39.75)	1.375	(34.93)	1.346	(34.19)	1.360	(34.54)	1.210	(30.73)	1.200	(30.48)	1.000	(25.40)
12	24	1.422	(36.12)	1.665	(42.29)	1.475	(37.47)	1.446	(36.73)	1.460	(37.08)	1.310	(33.27)	1.300	(33.02)	1.100	(27.94)
13	26	1.522	(38.66)	1.765	(44.83)	1.575	(40.01)	1.546	(39.27)	1.560	(39.62)	1.410	(35.81)	1.400	(35.56)	1.200	(30.48)
14	28	1.622	(41.20)	1.865	(47.37)	1.675	(42.55)	1.646	(41.81)	1.660	(42.16)	1.510	(38.35)	1.500	(38.10)	1.300	(33.02)
15	30	1.722	(43.74)	1.965	(49.91)	1.775	(45.09)	1.746	(44.35)	1.760	(44.70)	1.610	(40.89)	1.600	(40.64)	1.400	(35.56)
16	32	1.822	(46.28)	2.065	(52.45)	1.875	(47.63)	1.846	(46.89)	1.860	(47.24)	1.710	(43.43)	1.700	(43.18)	1.500	(38.10)
17	34	1.922	(48.82)	2.165	(54.99)	1.975	(50.17)	1.946	(49.43)	1.960	(49.78)	1.810	(45.97)	1.800	(45.72)	1.600	(40.64)
18	36	2.022	(51.36)	2.265	(57.53)	2.075	(52.71)	2.046	(51.97)	2.060	(52.32)	1.910	(48.51)	1.900	(48.26)	1.700	(43.18)
19	38	2.122	(53.90)	2.365	(60.07)	2.175	(55.25)	2.146	(54.51)	2.160	(54.86)	2.010	(51.05)	2.000	(50.80)	1.800	(45.72)
20	40	2.222	(56.44)	2.465	(62.61)	2.275	(57.79)	2.246	(57.05)	2.260	(57.40)	2.110	(53.59)	2.100	(53.34)	1.900	(48.26)
21	42	2.322	(58.98)	2.565	(65.15)	2.375	(60.33)	2.346	(59.59)	2.360	(59.94)	2.210	(56.13)	2.200	(55.88)	2.000	(50.80)
22	44	2.422	(61.52)	2.665	(67.69)	2.475	(62.87)	2.446	(62.13)	2.460	(62.48)	2.310	(58.67)	2.300	(58.42)	2.100	(53.34)
23	46	2.522	(64.06)	2.765	(70.23)	2.575	(65.41)	2.546	(64.67)	2.560	(65.02)	2.410	(61.21)	2.400	(60.96)	2.200	(55.88)
24	48	2.622	(66.60)	2.865	(72.77)	2.675	(67.95)	2.646	(67.21)	2.660	(67.56)	2.510	(63.75)	2.500	(63.50)	2.300	(58.42)
25	50	2.722	(69.14)	2.965	(75.31)	2.775	(70.49)	2.746	(69.75)	2.760	(70.10)	2.610	(66.29)	2.600	(66.04)	2.400	(60.96)
26	52	2.822	(71.68)	3.065	(77.85)	2.875	(73.03)	2.846	(72.29)	2.860	(72.64)	2.710	(68.83)	2.700	(68.58)	2.500	(63.50)
27	54	2.922	(74.22)	3.165	(80.39)	2.975	(75.57)	2.946	(74.83)	2.960	(75.18)	2.810	(71.37)	2.800	(71.12)	2.600	(66.04)
28	56	3.022	(76.76)	3.265	(82.93)	3.075	(78.11)	3.046	(77.37)	3.060	(77.72)	2.910	(73.91)	2.900	(73.66)	2.700	(68.58)
29	58	3.122	(79.30)	3.365	(85.47)	3.175	(80.65)	3.146	(79.91)	3.160	(80.26)	3.010	(76.45)	3.000	(76.20)	2.800	(71.12)
30	60	3.222	(81.84)	3.465	(88.01)	3.275	(83.19)	3.246	(82.45)	3.260	(82.80)	3.110	(78.99)	3.100	(78.74)	2.900	(73.66)
31	62	3.322	(84.38)	3.565	(90.55)	3.375	(85.73)	3.346	(84.99)	3.360	(85.34)	3.210	(81.53)	3.200	(81.28)	3.000	(76.20)
32	64	3.422	(86.92)	3.665	(93.09)	3.475	(88.27)	3.446	(87.53)	3.460	(87.88)	3.310	(84.07)	3.300	(83.82)	3.100	(78.74)
33	66	3.522	(89.46)	3.765	(95.63)	3.575	(90.81)	3.546	(90.07)	3.560	(90.42)	3.410	(86.61)	3.400	(86.36)	3.200	(81.28)
34	68	3.622	(92.00)	3.865	(98.17)	3.675	(93.35)	3.646	(92.61)	3.660	(92.96)	3.510	(89.15)	3.500	(88.90)	3.300	(83.82)
35	70	3.722	(94.54)	3.965	(100.71)	3.775	(95.89)	3.746	(95.15)	3.760	(95.50)	3.610	(91.69)	3.600	(91.44)	3.400	(86.36)
36	72	3.822	(97.08)	4.065	(103.25)	3.875	(98.43)	3.846	(97.69)	3.860	(98.04)	3.710	(94.23)	3.700	(93.98)	3.500	(88.90)
37	74	3.922	(99.62)	4.165	(105.79)	3.975	(100.97)	3.946	(100.23)	3.960	(100.58)	3.810	(96.77)	3.800	(96.52)	3.600	(91.44)
38	76	4.022	(102.16)	4.265	(108.33)	4.075	(103.51)	4.046	(102.77)	4.060	(103.12)	3.910	(99.31)	3.900	(99.06)	3.700	(93.98)
39	78	4.122	(104.70)	4.365	(110.87)	4.175	(106.05)	4.146	(105.31)	4.160	(105.66)	4.010	(101.85)	4.000	(101.60)	3.800	(96.52)
40	80	4.222	(107.24)	4.465	(113.41)	4.275	(108.59)	4.246	(107.85)	4.260	(108.20)	4.110	(104.39)	4.100	(104.14)	3.900	(99.06)
41	82	4.322	(109.78)	4.565	(115.95)	4.375	(111.13)	4.346	(110.39)	4.360	(110.74)	4.210	(106.93)	4.200	(106.68)	4.000	(101.60)
42	84	4.422	(112.32)	4.665	(118.49)	4.475	(113.67)	4.446	(112.93)	4.460	(113.28)	4.310	(109.47)	4.300	(109.22)	4.100	(104.14)
43	86	4.522	(114.86)	4.765	(121.03)	4.575	(116.21)	4.546	(115.47)	4.560	(115.82)	4.410	(112.01)	4.400	(111.76)	4.200	(106.68)
44	88	4.622	(117.40)	4.865	(123.57)	4.675	(118.75)	4.646	(118.01)	4.660	(118.36)	4.510	(114.55)	4.500	(114.30)	4.300	(109.22)
45	90	4.722	(119.94)	4.965	(126.11)	4.775	(121.29)	4.746	(120.55)	4.760	(120.90)	4.610	(117.09)	4.600	(116.84)	4.400	(111.76)
46	92	4.822	(122.48)	5.065	(128.65)	4.875	(123.83)	4.846	(123.09)	4.860	(123.44)	4.710	(119.63)	4.700	(119.38)	4.500	(114.30)
47	94	4.922	(125.02)	5.165	(131.19)	4.975	(126.37)	4.946	(125.63)	4.960	(125.98)	4.810	(122.17)	4.800	(121.92)	4.600	(116.84)
48	96	5.022	(127.56)	5.265	(133.73)	5.075	(128.91)	5.046	(128.17)	5.060	(128.52)	4.910	(124.71)	4.900	(124.46)	4.700	(119.38)
49	98	5.122	(130.10)	5.365	(136.27)	5.175	(131.45)	5.146	(130.71)	5.160	(131.06)	5.010	(127.25)	5.000	(127.00)	4.800	(121.92)
50	100	5.222	(132.64)	5.465	(138.81)	5.275	(133.99)	5.246	(133.25)	5.260	(133.60)	5.110	(129.79)	5.100	(129.54)	4.900	(124.46)
51	102	5.322	(135.18)	5.565	(141.35)	5.375	(136.53)	5.346	(135.79)	5.360	(136.14)	5.210	(132.33)	5.200	(132.08)	5.000	(127.00)
52	104	5.422	(137.72)	5.665	(143.89)	5.475	(139.07)	5.446	(138.33)	5.460	(138.68)	5.310	(134.87)	5.300	(134.62)	5.100	(129.54)
53	106	5.522	(140.26)	5.765	(146.43)	5.575	(141.61)	5.546	(140.87)	5.560	(141.22)	5.410	(137.41)	5.400	(137.16)	5.200	(132.08)
54	108	5.622	(142.80)	5.865	(148.97)	5.675	(144.15)	5.646	(143.41)	5.660	(143.76)	5.510	(139.95)	5.500	(139.70)	5.300	(134.62)
55	110	5.722	(145.34)	5.965	(151.51)	5.775	(146.69)	5.746	(145.95)	5.760	(146.30)	5.610	(142.49)	5.600	(142.24)	5.400	(137.16)
56	112	5.822	(147.88)	6.065	(154.05)	5.875	(149.23)	5.846	(148.49)	5.860	(148.84)	5.710	(145.03)	5.700	(144.78)	5.500	(139.70)
57	114	5.922	(150.42)	6.165	(156.59)	5.975	(151.77)	5.946	(151.03)	5.960	(151.38)	5.810	(147.57)	5.800	(147.32)	5.600	(142.24)
58	116	6.022	(152.96)	6.265	(159.13)	6.075	(154.31)	6.046	(153.57)	6.060	(153.92)	5.910	(150.11)	5.900	(149.86)	5.700	(144.78)
59	118	6.122	(155.50)	6.365	(161.67)	6.175	(156.85)			6.160	(156.46)	6.010	(152.65)	6.000	(152.40)	5.800	(147.32)
60	120	6.222	(158.04)	6.465	(164.21)	6.275	(159.39)			6.260	(159.00)	6.110	(155.19)	6.100	(154.94)	5.900	(149.86)
61	122	6.322	(160.58)							6.360	(161.54)			6.200	(157.48)	6.000	(152.40)
62	124									6.460	(164.08)			6.300	(160.02)	6.100	(154.94)
63	126									6.560	(166.62)			6.400	(162.56)	6.200	(157.48)
64	128									6.660	(169.16)			6.500	(165.10)	6.300	(160.02)
65	130									6.760	(171.70)			6.600	(167.64)	6.400	(162.56)
66	132									6.860	(174.24)			6.700	(170.18)	6.500	(165.10)
67	134									6.960	(176.78)			6.800	(172.72)	6.600	(167.64)
68	136									7.060	(179.32)			6.900	(175.26)	6.700	(170.18)
69	138									7.160	(181.86)			7.000	(177.80)	6.800	(172.72)
70	140									7.260	(184.40)			7.100	(180.34)	6.900	(175.26)
71	142									7.360	(186.94)			7.200	(182.88)	7.000	(177.80)
72	144									7.460	(189.48)			7.300	(185.42)	7.100	(180.34)
73	146									7.560	(192.02)			7.400	(187.96)	7.200	(182.88)
74	148									7.660	(194.56)			7.500	(190.50)	7.300	(185.42)
75	150									7.760	(197.10)			7.600	(193.04)	7.400	(187.96)

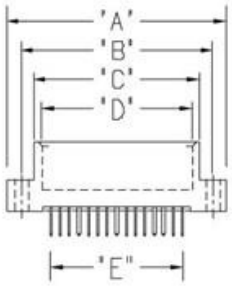

Downloaded from Elcodis.com electronic components distributor

.156" (3.96mm) CONTACT SPACING CONNECTOR DIMENSIONS

303, 305, 306, 307, 315, 316, 317, 333, 336, 337, 355, 356, 357, 387, 737 Series Card Edge Connectors

DIMENSION		"A"								"B"					
SERIES		317		333		336		REST OF SERIES		317		333, 336		REST OF SERIES	
Number of Contacts Single	Dual	Inch	(mm)	Inch	(mm)	Inch	(mm)	Inch	(mm)	Inch	(mm)	Inch	(mm)	Inch	(mm)
6	12	1.830	(46.48)	1.784	(45.31)	1.857	(47.17)	1.842	(46.79)	1.539	(39.09)	1.534	(38.96)	1.532	(38.91)
7	14	1.986	(50.44)	1.940	(49.28)	2.013	(51.13)	1.998	(50.75)	1.695	(43.05)	1.690	(42.93)	1.688	(42.88)
8	16	2.142	(54.41)	2.096	(53.24)	2.169	(55.09)	2.154	(54.71)	1.851	(47.02)	1.846	(46.89)	1.844	(46.84)
9	18	2.298	(58.37)	2.252	(57.20)	2.325	(59.06)	2.310	(58.67)	2.007	(50.98)	2.002	(50.85)	2.000	(50.80)
10	20	2.454	(62.33)	2.408	(61.16)	2.481	(63.02)	2.466	(62.64)	2.163	(54.94)	2.158	(54.81)	2.156	(54.76)
11	22	2.610	(66.29)	2.564	(65.13)	2.637	(66.98)	2.622	(66.60)	2.319	(58.90)	2.314	(58.78)	2.312	(58.72)
12	24	2.766	(70.26)	2.720	(69.09)	2.793	(70.94)	2.778	(70.56)	2.475	(62.87)	2.470	(62.74)	2.468	(62.69)
13	26	2.922	(74.22)	2.876	(73.05)	2.949	(74.90)	2.934	(74.52)	2.631	(66.83)	2.626	(66.70)	2.624	(66.65)
14	28	3.078	(78.18)	3.032	(77.01)	3.105	(78.87)	3.090	(78.49)	2.787	(70.79)	2.782	(70.66)	2.780	(70.61)
15	30	3.234	(82.14)	3.188	(80.98)	3.261	(82.83)	3.246	(82.45)	2.943	(74.75)	2.938	(74.63)	2.936	(74.57)
16	32	3.390	(86.11)	3.344	(84.94)	3.417	(86.79)	3.402	(86.41)	3.099	(78.71)	3.094	(78.59)	3.092	(78.54)
17	34	3.546	(90.07)	3.500	(88.90)	3.573	(90.75)	3.558	(90.37)	3.255	(82.68)	3.250	(82.55)	3.248	(82.50)
18	36	3.702	(94.03)	3.656	(92.86)	3.729	(94.72)	3.714	(94.34)	3.411	(86.64)	3.406	(86.51)	3.404	(86.46)
19	38	3.858	(97.99)	3.812	(96.82)	3.885	(98.68)	3.870	(98.30)	3.567	(90.60)	3.562	(90.47)	3.560	(90.42)
20	40	4.014	(101.96)	3.968	(100.79)	4.041	(102.64)	4.026	(102.26)	3.723	(94.56)	3.718	(94.44)	3.716	(94.39)
21	42	4.170	(105.92)	4.124	(104.75)	4.197	(106.60)	4.182	(106.22)	3.879	(98.53)	3.874	(98.40)	3.872	(98.35)
22	44	4.326	(109.88)	4.280	(108.71)	4.353	(110.57)	4.338	(110.19)	4.035	(102.49)	4.030	(102.36)	4.028	(102.31)
23	46	4.482	(113.84)	4.436	(112.67)	4.509	(114.53)	4.494	(114.15)	4.191	(106.45)	4.186	(106.32)	4.184	(106.27)
24	48	4.638	(117.81)	4.592	(116.64)	4.665	(118.49)	4.650	(118.11)	4.347	(110.41)	4.342	(110.29)	4.340	(110.24)
25	50	4.794	(121.77)	4.748	(120.60)	4.821	(122.45)	4.806	(122.07)	4.503	(114.38)	4.498	(114.25)	4.496	(114.20)
26	52	4.950	(125.73)	4.904	(124.56)	4.977	(126.42)	4.962	(126.03)	4.659	(118.34)	4.654	(118.21)	4.652	(118.16)
27	54	5.106	(129.69)	5.060	(128.52)	5.133	(130.38)	5.118	(130.00)	4.815	(122.30)	4.810	(122.17)	4.808	(122.12)
28	56	5.262	(133.65)	5.216	(132.49)	5.289	(134.34)	5.274	(133.96)	4.971	(126.26)	4.966	(126.14)	4.964	(126.09)
29	58	5.418	(137.62)	5.372	(136.45)	5.445	(138.30)	5.430	(137.92)	5.127	(130.23)	5.122	(130.10)	5.120	(130.05)
30	60	5.574	(141.58)	5.528	(140.41)	5.601	(142.27)	5.586	(141.88)	5.283	(134.19)	5.278	(134.06)	5.276	(134.01)
31	62	5.730	(145.54)	5.684	(144.37)	5.757	(146.23)	5.742	(145.85)	5.439	(138.15)	5.434	(138.02)	5.432	(137.97)
32	64	5.886	(149.50)	5.840	(148.34)	5.913	(150.19)	5.898	(149.81)	5.595	(142.11)	5.590	(141.99)	5.588	(141.94)
33	66	6.042	(153.47)	5.996	(152.30)	6.069	(154.15)	6.054	(153.77)	5.751	(146.08)	5.746	(145.95)	5.744	(145.90)
34	68	6.198	(157.43)	6.152	(156.26)	6.225	(158.12)	6.210	(157.73)	5.907	(150.04)	5.902	(149.91)	5.900	(149.86)
35	70	6.354	(161.39)	6.308	(160.22)	6.381	(162.08)	6.366	(161.70)	6.063	(154.00)	6.058	(153.87)	6.056	(153.82)
36	72	6.510	(165.35)	6.464	(164.19)	6.537	(166.04)	6.522	(165.66)	6.219	(157.96)	6.214	(157.84)	6.212	(157.78)
37	74	6.666	(169.32)	6.620	(168.15)	6.693	(170.00)	6.678	(169.62)	6.375	(161.93)	6.370	(161.80)	6.368	(161.75)
38	76	6.822	(173.28)	6.776	(172.11)	6.849	(173.96)	6.834	(173.58)	6.531	(165.89)	6.526	(165.76)	6.524	(165.71)
39	78	6.978	(177.24)	6.932	(176.07)	7.005	(177.93)	6.990	(177.55)	6.687	(169.85)	6.682	(169.72)	6.680	(169.67)
40	80	7.134	(181.20)	7.088	(180.04)	7.161	(181.89)	7.146	(181.51)	6.843	(173.81)	6.838	(173.69)	6.836	(173.63)
41	82	7.290	(185.17)	7.244	(184.00)	7.317	(185.85)	7.302	(185.47)	6.999	(177.77)	6.994	(177.65)	6.992	(177.60)
42	84	7.446	(189.13)	7.400	(187.96)	7.473	(189.81)	7.458	(189.43)	7.155	(181.74)	7.150	(181.61)	7.148	(181.56)
43	86	7.602	(193.09)	7.556	(191.92)	7.629	(193.78)	7.614	(193.40)	7.311	(185.70)	7.306	(185.57)	7.304	(185.52)
44	88							7.770	(197.36)					7.460	(189.48)

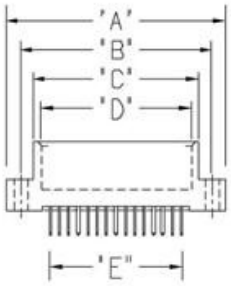

Downloaded from Elcodis.com electronic components distributor

CONNECTOR DIMENSIONS CONTACT SPACING .156" (3.96mm)

Card Edge Connector Series 303, 305, 306, 307, 315, 316, 317, 333, 336, 337, 355, 356, 357, 387, 737

DIMENSION		"C"								"D"				"E"	
SERIES		303, 317		333		336		REST OF SERIES		315, 316		REST OF SERIES		ALL SERIES	
Number of Contacts Single	Dual	Inch	(mm)	Inch	(mm)	Inch	(mm)	Inch	(mm)	Inch	(mm)	Inch	(mm)	Inch	(mm)
6	12	1.220	(30.99)	1.261	(32.03)	1.216	(30.89)	1.246	(31.65)	1.080	(27.43)	1.100	(27.94)	.780	(19.81)
7	14	1.376	(34.95)	1.417	(35.99)	1.372	(34.85)	1.402	(35.61)	1.236	(31.39)	1.256	(31.90)	.936	(23.77)
8	16	1.532	(38.91)	1.573	(39.95)	1.528	(38.81)	1.558	(39.57)	1.392	(35.36)	1.412	(35.86)	1.092	(27.74)
9	18	1.688	(42.88)	1.729	(43.92)	1.684	(42.77)	1.714	(43.54)	1.548	(39.32)	1.568	(39.83)	1.248	(31.70)
10	20	1.844	(46.84)	1.885	(47.88)	1.840	(46.74)	1.870	(47.50)	1.704	(43.28)	1.724	(43.79)	1.404	(35.66)
11	22	2.000	(50.80)	2.041	(51.84)	1.996	(50.70)	2.026	(51.46)	1.860	(47.24)	1.880	(47.75)	1.560	(39.62)
12	24	2.156	(54.76)	2.197	(55.80)	2.152	(54.66)	2.182	(55.42)	2.016	(51.21)	2.036	(51.71)	1.716	(43.59)
13	26	2.312	(58.72)	2.353	(59.77)	2.308	(58.62)	2.338	(59.39)	2.172	(55.17)	2.192	(55.68)	1.872	(47.55)
14	28	2.468	(62.69)	2.509	(63.73)	2.464	(62.59)	2.494	(63.35)	2.328	(59.13)	2.348	(59.64)	2.028	(51.51)
15	30	2.624	(66.65)	2.665	(67.69)	2.620	(66.55)	2.650	(67.31)	2.484	(63.09)	2.504	(63.60)	2.184	(55.47)
16	32	2.780	(70.61)	2.821	(71.65)	2.776	(70.51)	2.806	(71.27)	2.640	(67.06)	2.660	(67.56)	2.340	(59.44)
17	34	2.936	(74.57)	2.977	(75.62)	2.932	(74.47)	2.962	(75.23)	2.796	(71.02)	2.816	(71.53)	2.496	(63.40)
18	36	3.092	(78.54)	3.133	(79.58)	3.088	(78.44)	3.118	(79.20)	2.952	(74.98)	2.972	(75.49)	2.652	(67.36)
19	38	3.248	(82.50)	3.289	(83.54)	3.244	(82.40)	3.274	(83.16)	3.108	(78.94)	3.128	(79.45)	2.808	(71.32)
20	40	3.404	(86.46)	3.445	(87.50)	3.400	(86.36)	3.430	(87.12)	3.264	(82.91)	3.284	(83.41)	2.964	(75.29)
21	42	3.560	(90.42)	3.601	(91.47)	3.556	(90.32)	3.586	(91.08)	3.420	(86.87)	3.440	(87.38)	3.120	(79.25)
22	44	3.716	(94.39)	3.757	(95.43)	3.712	(94.28)	3.742	(95.05)	3.576	(90.83)	3.596	(91.34)	3.276	(83.21)
23	46	3.872	(98.35)	3.913	(99.39)	3.868	(98.25)	3.898	(99.01)	3.732	(94.79)	3.752	(95.30)	3.432	(87.17)
24	48	4.028	(102.31)	4.069	(103.35)	4.024	(102.21)	4.054	(102.97)	3.888	(98.76)	3.908	(99.26)	3.588	(91.14)
25	50	4.184	(106.27)	4.225	(107.32)	4.180	(106.17)	4.210	(106.93)	4.044	(102.72)	4.064	(103.23)	3.744	(95.10)
26	52	4.340	(110.24)	4.381	(111.28)	4.336	(110.13)	4.366	(110.90)	4.200	(106.68)	4.220	(107.19)	3.900	(99.06)
27	54	4.496	(114.20)	4.537	(115.24)	4.492	(114.10)	4.522	(114.86)	4.356	(110.64)	4.376	(111.15)	4.056	(103.02)
28	56	4.652	(118.16)	4.693	(119.20)	4.648	(118.06)	4.678	(118.82)	4.512	(114.60)	4.532	(115.11)	4.212	(106.98)
29	58	4.808	(122.12)	4.849	(123.16)	4.804	(122.02)	4.834	(122.78)	4.668	(118.57)	4.688	(119.08)	4.368	(110.95)
30	60	4.964	(126.09)	5.005	(127.13)	4.960	(125.98)	4.990	(126.75)	4.824	(122.53)	4.844	(123.04)	4.524	(114.91)
31	62	5.120	(130.05)	5.161	(131.09)	5.116	(129.95)	5.146	(130.71)	4.980	(126.49)	5.000	(127.00)	4.680	(118.87)
32	64	5.276	(134.01)	5.317	(135.05)	5.272	(133.91)	5.302	(134.67)	5.136	(130.45)	5.156	(130.96)	4.836	(122.83)
33	66	5.432	(137.97)	5.473	(139.01)	5.428	(137.87)	5.458	(138.63)	5.292	(134.42)	5.312	(134.92)	4.992	(126.80)
34	68	5.588	(141.94)	5.629	(142.98)	5.584	(141.83)	5.614	(142.60)	5.448	(138.38)	5.468	(138.89)	5.148	(130.76)
35	70	5.744	(145.90)	5.785	(146.94)	5.740	(145.80)	5.770	(146.56)	5.604	(142.34)	5.624	(142.85)	5.304	(134.72)
36	72	5.900	(149.86)	5.941	(150.90)	5.896	(149.76)	5.926	(150.52)	5.760	(146.30)	5.780	(146.81)	5.460	(138.68)
37	74	6.056	(153.82)	6.097	(154.86)	6.052	(153.72)	6.082	(154.48)	5.916	(150.27)	5.936	(150.77)	5.616	(142.65)
38	76	6.212	(157.78)	6.253	(158.83)	6.208	(157.68)	6.238	(158.45)	6.072	(154.23)	6.092	(154.74)	5.772	(146.61)
39	78	6.368	(161.75)	6.409	(162.79)	6.364	(161.65)	6.394	(162.41)	6.228	(158.19)	6.248	(158.70)	5.928	(150.57)
40	80	6.524	(165.71)	6.565	(166.75)	6.520	(165.61)	6.550	(166.37)	6.384	(162.15)	6.404	(162.66)	6.084	(154.53)
41	82	6.680	(169.67)	6.721	(170.71)	6.676	(169.57)	6.706	(170.33)	6.540	(166.12)	6.560	(166.62)	6.240	(158.50)
42	84	6.836	(173.63)	6.877	(174.68)	6.832	(173.53)	6.862	(174.29)	6.696	(170.08)	6.716	(170.59)	6.396	(162.46)
43	86	6.992	(177.60)	7.033	(178.64)	6.988	(177.50)	7.018	(178.26)	6.852	(174.04)	6.872	(174.55)	6.552	(166.42)
44	88							7.174	(182.22)			7.028	(178.51)	6.708	(170.38)

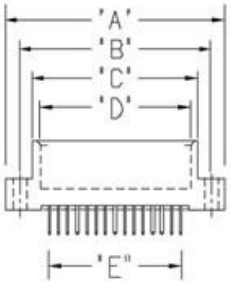

Downloaded from Elcodis.com electronic components distributor

.125" (3.18mm) CONTACT SPACING CONNECTOR DIMENSIONS

346, 396, 746 Series Card Edge Connectors

DIMENSION		"A"		"B"		"C"		"D"		"E"	
SERIES		346, 396		346, 396		ALL SERIES		ALL SERIES		ALL SERIES	
Number of Contacts Single	Dual	Inch	(mm)	Inch	(mm)	Inch	(mm)	Inch	(mm)	Inch	(mm)
5	10	1.435	(36.45)	1.170	(29.72)	.910	(23.11)	.750	(19.05)	.500	(12.70)
6	12	1.560	(39.62)	1.295	(32.89)	1.035	(26.29)	.875	(22.23)	.625	(15.88)
7	14	1.685	(42.80)	1.420	(36.07)	1.160	(29.46)	1.000	(25.40)	.750	(19.05)
8	16	1.810	(45.97)	1.545	(39.24)	1.285	(32.64)	1.125	(28.58)	.875	(22.23)
9	18	1.935	(49.15)	1.670	(42.42)	1.410	(35.81)	1.250	(31.75)	1.000	(25.40)
10	20	2.060	(52.32)	1.795	(45.59)	1.535	(38.99)	1.375	(34.93)	1.125	(28.58)
11	22	2.185	(55.50)	1.920	(48.77)	1.660	(42.16)	1.500	(38.10)	1.250	(31.75)
12	24	2.310	(58.67)	2.045	(51.94)	1.785	(45.34)	1.625	(41.28)	1.375	(34.93)
13	26	2.435	(61.85)	2.170	(55.12)	1.910	(48.51)	1.750	(44.45)	1.500	(38.10)
14	28	2.560	(65.02)	2.295	(58.29)	2.035	(51.69)	1.875	(47.63)	1.625	(41.28)
15	30	2.685	(68.20)	2.420	(61.47)	2.160	(54.86)	2.000	(50.80)	1.750	(44.45)
16	32	2.810	(71.37)	2.545	(64.64)	2.285	(58.04)	2.125	(53.98)	1.875	(47.63)
17	34	2.935	(74.55)	2.670	(67.82)	2.410	(61.21)	2.250	(57.15)	2.000	(50.80)
18	36	3.060	(77.72)	2.795	(70.99)	2.535	(64.39)	2.375	(60.33)	2.125	(53.98)
19	38	3.185	(80.90)	2.920	(74.17)	2.660	(67.56)	2.500	(63.50)	2.250	(57.15)
20	40	3.310	(84.07)	3.045	(77.34)	2.785	(70.74)	2.625	(66.68)	2.375	(60.33)
21	42	3.435	(87.25)	3.170	(80.52)	2.910	(73.91)	2.750	(69.85)	2.500	(63.50)
22	44	3.560	(90.42)	3.295	(83.69)	3.035	(77.09)	2.875	(73.03)	2.625	(66.68)
23	46	3.685	(93.60)	3.420	(86.87)	3.160	(80.26)	3.000	(76.20)	2.750	(69.85)
24	48	3.810	(96.77)	3.545	(90.04)	3.285	(83.44)	3.125	(79.38)	2.875	(73.03)
25	50	3.935	(99.95)	3.670	(93.22)	3.410	(86.61)	3.250	(82.55)	3.000	(76.20)
26	52	4.060	(103.12)	3.795	(96.39)	3.535	(89.79)	3.375	(85.73)	3.125	(79.38)
27	54	4.185	(106.30)	3.920	(99.57)	3.660	(92.96)	3.500	(88.90)	3.250	(82.55)
28	56	4.310	(109.47)	4.045	(102.74)	3.785	(96.14)	3.625	(92.08)	3.375	(85.73)
29	58	4.435	(112.65)	4.170	(105.92)	3.910	(99.31)	3.750	(95.25)	3.500	(88.90)
30	60	4.560	(115.82)	4.295	(109.09)	4.035	(102.49)	3.875	(98.43)	3.625	(92.08)
31	62	4.685	(119.00)	4.420	(112.27)	4.160	(105.66)	4.000	(101.60)	3.750	(95.25)
32	64	4.810	(122.17)	4.545	(115.44)	4.285	(108.84)	4.125	(104.78)	3.875	(98.43)
33	66	4.935	(125.35)	4.670	(118.62)	4.410	(112.01)	4.250	(107.95)	4.000	(101.60)
34	68	5.060	(128.52)	4.795	(121.79)	4.535	(115.19)	4.375	(111.13)	4.125	(104.78)
35	70	5.185	(131.70)	4.920	(124.97)	4.660	(118.36)	4.500	(114.30)	4.250	(107.95)
36	72	5.310	(134.87)	5.045	(128.14)	4.785	(121.54)	4.625	(117.48)	4.375	(111.13)
37	74	5.435	(138.05)	5.170	(131.32)	4.910	(124.71)	4.750	(120.65)	4.500	(114.30)
38	76	5.560	(141.22)	5.295	(134.49)	5.035	(127.89)	4.875	(123.83)	4.625	(117.48)
39	78	5.685	(144.40)	5.420	(137.67)	5.160	(131.06)	5.000	(127.00)	4.750	(120.65)
40	80	5.810	(147.57)	5.545	(140.84)	5.285	(134.24)	5.125	(130.18)	4.875	(123.83)
41	82	5.935	(150.75)	5.670	(144.02)	5.410	(137.41)	5.250	(133.35)	5.000	(127.00)
42	84	6.060	(153.92)	5.795	(147.19)	5.535	(140.59)	5.375	(136.53)	5.125	(130.18)
43	86	6.185	(157.10)	5.920	(150.37)	5.660	(143.76)	5.500	(139.70)	5.250	(133.35)
44	88	6.310	(160.27)	6.045	(153.54)	5.785	(146.94)	5.625	(142.88)	5.375	(136.53)
45	90	6.435	(163.45)	6.170	(156.72)	5.910	(150.11)	5.750	(146.05)	5.500	(139.70)
46	92	6.560	(166.62)	6.295	(159.89)	6.035	(153.29)	5.875	(149.23)	5.625	(142.88)
47	94	6.685	(169.80)	6.420	(163.07)	6.160	(156.46)	6.000	(152.40)	5.750	(146.05)
48	96	6.810	(172.97)	6.545	(166.24)	6.285	(159.64)	6.125	(155.58)	5.875	(149.23)
49	98	6.935	(176.15)	6.670	(169.42)	6.410	(162.81)	6.250	(158.75)	6.000	(152.40)
50	100	7.060	(179.32)	6.795	(172.59)	6.535	(165.99)	6.375	(161.93)	6.125	(155.58)
51	102					6.660	(169.16)	6.500	(165.10)	6.250	(158.75)
52	104					6.785	(172.34)	6.625	(168.28)	6.375	(161.93)
53	106					6.910	(175.51)	6.750	(171.45)	6.500	(165.10)
54	108					7.035	(178.69)	6.875	(174.63)	6.625	(168.28)
55	110					7.160	(181.86)	7.000	(177.80)	6.750	(171.45)
56	112					7.285	(185.04)	7.125	(180.98)	6.875	(174.63)
57	114					7.410	(188.21)	7.250	(184.15)	7.000	(177.80)
58	116					7.535	(191.39)	7.375	(187.33)	7.125	(180.98)
59	118					7.660	(194.56)	7.500	(190.50)	7.250	(184.15)
60	120					7.785	(197.74)	7.625	(193.68)	7.375	(187.33)

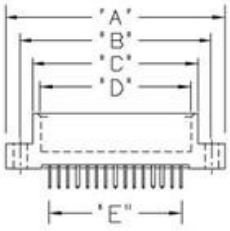

Downloaded from Elcodis.com electronic components distributor

ADDITIONAL CONNECTOR SERIES

The following list of card edge connector series are no longer standard catalogue items, however they are not obsolete. Any orders received by Edac for a previously purchased item included within this list will be acknowledged.

Any new item inquiries should be made using the revised series number as indicated below. Please note that the conversion of special variation connector part numbers to the revised series should only be done in consultation with Edac Inc.

205 Series
Refer to 355 Series on page 31. For example, part number 205-030-521-202 is revised to 355-030-521-202.

206 Series
Refer to 356 Series on page 33. For example, part number 206-015-400-178 is revised to 356-015-400-178.

207 Series
Refer to 357 Series on page 35. For example, part number 207-020-555-202 is revised to 357-020-555-202.

237 Series
Refer to 387 Series on page 37. For example, part number 237-086-521-201 is revised to 387-086-521-201.

241 Series
Refer to 391 Series on page 19. For example, part number 241-030-520-201 is revised to 391-030-520-201.

245 Series
Refer to 395 Series on page 17. For example, part number 245-062-520-201 is revised to 395-062-520-201.

246 Series
Refer to 396 Series on page 29. For example, part number 246-070-540-201 is revised to 396-070-540-201.

308 Series
Refer to 357 Series on page 35. For example, part number 308-036-400-202 is revised to 357-036-400-202.

324 Series
Refer to 307 Series on page 35. For example, part number 324-036-520-268 is revised to 307-036-520-268.

330 Series
Refer to 307 Series on page 35. For example, part number 330-030-500-278 is revised to 307-030-500-278.

334 Series
Refer to 384 Series on page 58. For example, part number 334-018-525-102 is revised to 384-018-525-102. Insulator colour is revised from green to black.

399 Series
Refer to 349 Series on page 57. For example, part number 399-052-541-804 is revised to 349-052-541-804. Insulator colour is revised from black to green.

345 SERIES CONTACT EJECTION TOOL

- Part Number 345-280-200
- For Removal of Contacts in 325, 327, 333, 337, 340, 342, 345, 346, 379, 392, 395, 395-AT and 396 Series Conectors
- May also be Used for Removal of P.C. Tail Contacts in 336 and 349 Series
- Provides Easy Positive Ejection without Damage to the Insulator
- For Compliant Pin Connector Usage, See Page 6 .

Downloaded from Elcodis.com electronic components distributor

100 SERIES CONTACTS FOR P.C. BOARD

.100" (2.54mm) & .200" (5.08mm) Contact Spacing

100 SERIES LOOSE CONTACTS

Example Part Number 100 - 290 - 208

- **Series** — 100
- **Loose Contact Identification Code** — 290
- **Contact Code** — 208

Contact Code [1, 2, 3, 4]	Silhouette	Tail Length "G"
201		.122 (3.10)
202		.122 (3.10)
208		.108 (2.74)
210		.122 (3.10)
250		.122 (3.10)
251		.375 (9.53)
252		.188 (4.78)
253		.110 (2.79)
258		.497 (12.62)
450		.182 (4.62)

103/105/106 SERIES CONTACTS ON STRIPS

Example Part Number 103 - 060 - 252 - 100

- **Series & Pattern** — 103
- **Total Number of Contacts** — 060
- **Contact Code** — 252
- **Spacing Code** — 100

Series and Pattern [5, 6]	Pattern Description
103	— — — — — Horizontal
105	I I I I I Vertical
106	/ / / / / 45 Degree

Total Number of Contacts [7]	Contact Spacing
002, 003,...060	.200 (5.08)
002, 003,...120	.100 (2.54)

Contact Code [1, 2, 4]	Pattern	Contact Spacing
201, 202, 203, 204	105	.200 (5.08)
208	105	.100 (2.54) or .200 (5.08)
250, 251, 450	103 or 106	.200 (5.08)
252 or 253	103 or 106	.100 (2.54) or .200 (5.08)

Spacing Code	Contact Spacing
100	.100 (2.54)
200	.200 (5.08)

Ordering Code Notes

1) Contactisodes 208, 252 and 253 are rated for 5 Amperes current. All others contacts are rated for 10 Amperes.
2) Contact codes 208, 252 and 253 will mate together, but not with the other contacts listed.
3) Contact codes 210 and 258 are available loose only.
4) Contact code 450 is designed for .125 (3.18) thick circuit boards. All other contacts are designed for .062 (1.57) thick boards.
5) Pattern schematics are views toward the tip of the contact tails.
6) Consult with Edac regarding double row staggered patterns for contact codes 250, 251, or 450. Available with up to 60 contacts per row, these patterns have .125 (3.18) row spacing for use on mother boards that mate with upper and lower tier daughter board contacts.
7) All strip lengths up to 60 or 120 contacts (as determined by spacing and pattern) are available upon request.

FEATURES

- .100 (2.54) or .200 (5.08) Contact Spacing for Contacts on Strips. Other Spacings Accommodated with Loose Contacts
- Assemble onto .062 (1.57) or .125 (3.18) Nominal Thickness P.C. Board by Staking and/or Soldering of Contact Tails
- Edacon Hermaphroditic Contact Mating Design
- Card Guides, Guide Pins, Guide Sockets and Polarizing Sleeves to Ensure Correct Alignment and Mating are Available
- Handling and Assembly Simplified with Contacts on Strips
- Designed to Mate with 100 Series Contacts in Parallel or Perpendicular Board Configurations

SPECIFICATIONS

- Contact Material: Phosphor Bronze Alloy CA-510
- Contact Plating: Gold over Nickel for Entire Contact
- Current Rating: 5 or 10 Amperes (See Ordering Code Notes)
- Contact Resistance: 10 Milliohms Maximum
- Insertion and Withdrawal Force: 2 to 16 oz (0.56 to 4.45 N) per Contact

Downloaded from Elcodis.com electronic components distributor

PARALLEL P.C. BOARDS .200 (5.08) CONTACT SPACING

CONTACT CODES 250, 251, 258, OR 450
.062 (1.57) OR .125 (3.18) NOMINAL THICKNESS BOARDS

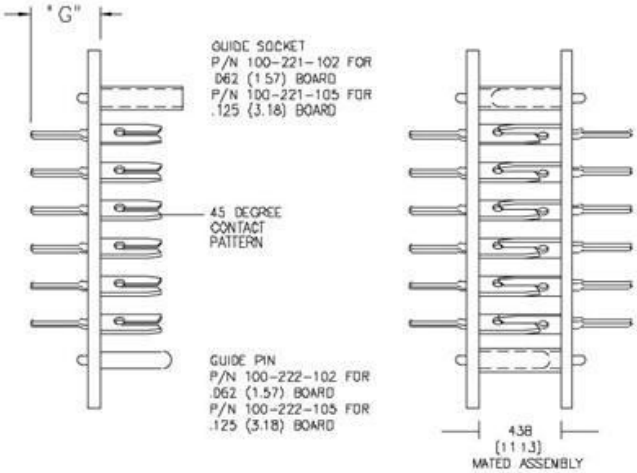

MOTHER BOARD –CONTACT CODES 250, 251, 258 OR 450
–.062 (1.57) OR .125 (3.18) NOMINAL THICKNESS BOARDS

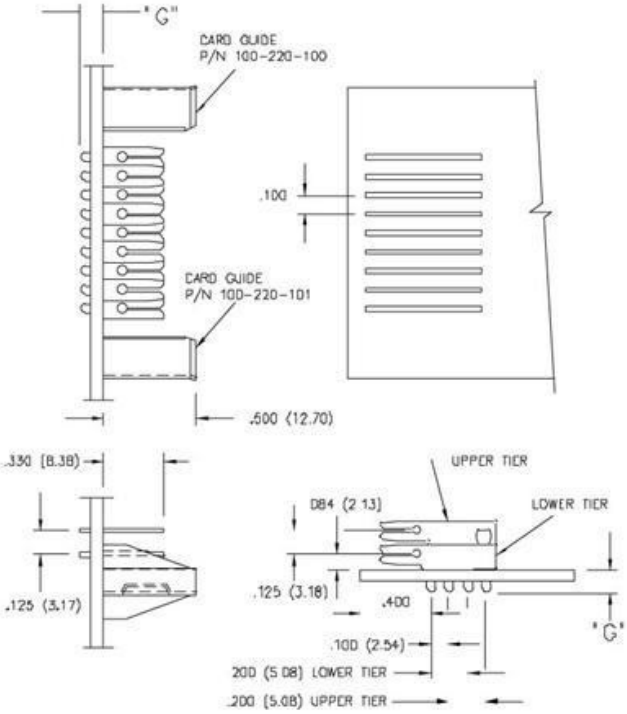

PARALLEL P.C. BOARDS .100 (2.54) OR .200 (5.08) CONTACT SPACING

CONTACT CODES 252 OR 253
.062 (1.57) OR .125 (3.18) NOMINAL THICKNESS BOARDS

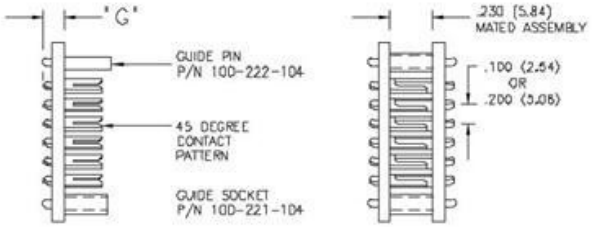

MOTHER/DAUGHTER BOARDS .100 (2.54) OR .200 (5.08) CONTACT SPACING

MOTHER BOARD –CONTACT CODES 252 OR 253
DAUGHTER BOARD –CONTACT CODE 208
– .062 (1.57) NOMINAL THICKNESS BOARDS

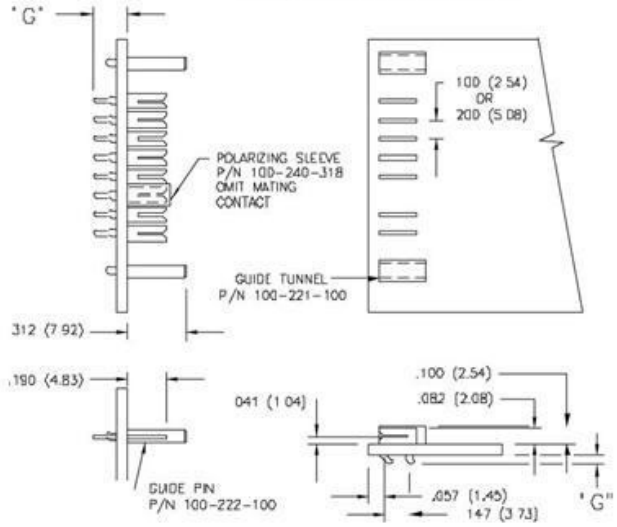

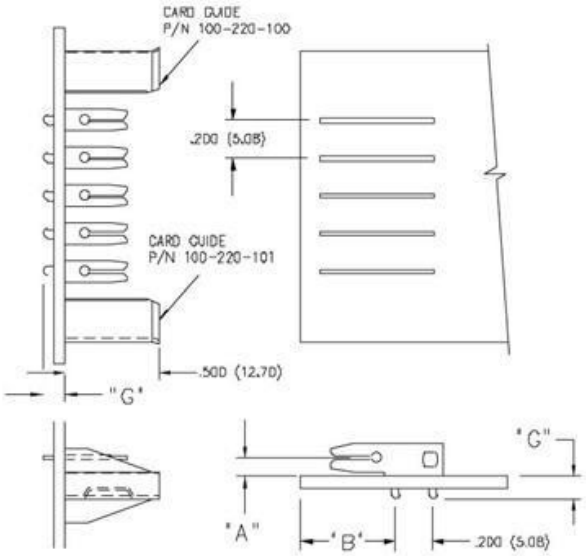

CONTACT CODE	"A"	"B"
201	.209 (5.31)	.500 (12.70)
202, 203	.084 (2.13)	.400 (10.16)
204	.096 (2.44)	.450 (11.43)
210	.099 (2.51)	.200 (5.08)

Downloaded from Elcodis.com electronic components distributor

421/422/423 SERIES METAL TO METAL (TWO PIECE) CONNECTOR

Plug

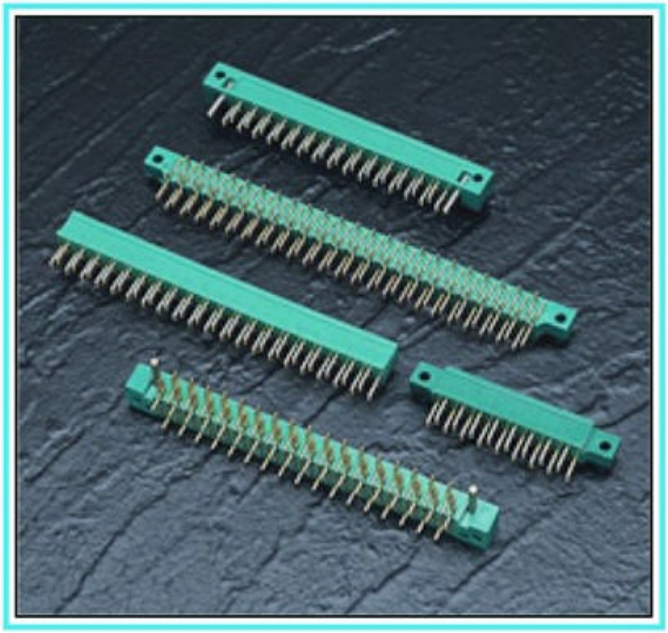

421/422/423 SERIES ORDERING CODE

Example Part Number 423 - 041 - 520 - 102

- **Series** — 423
- **Total Number of Contacts** — 041
- **Contact Code** — 520
- **Mounting Options** — 102

Series	Insulator Mounting Option
421	.128 (3.25) Dia. Mounting Holes
422	No Mounting Lugs
423	.128 (3.25) Dia. Mounting Holes and Guide Pins per MIL-C-21097

Total Number of Contacts

017, 023, 029, 035, 041 or 047

Contact Code	Description & Tail Size	Tail Length "G"
520	P.C. Tail .044 x .025 (1.12 x 0.64)	.122 (3.10)
521	P.C. Tail .044 x .025 (1.12 x 0.64)	.153 (3.89)

Mounting Options	Use Code with Series
100	422 Series
102	421 or 423 Series

FEATURES

- .200 (5.08) Contact Spacing x .300 (7.62) Row Spacing with Staggered Grid
- Mounts onto .062 (1.57) or .093 (2.36) Nominal Thickness P.C. Board by Soldering and/or Staking of P.C. Tails
- Edacon Hermaphroditic Contact Mating Design
- Mounting Hole and Guide Pin Options
- 421 Series Designed to Mate with Non-Card Guide Versions of 408 or 415 Series, 422 Series Designed to Mate with Card Guide Versions of 408 or 415 Series, 423 Series Designed to Mate with 424 or 438 Series

SPECIFICATIONS

- Insulator Material: Polyphenylene Sulphide, UL 94V-0, Colour: Green
- Contact Material: Phosphor Bronze Alloy CA-510
- Contact Plating: Gold over Nickel for Entire Contact
- Current Rating: 10 Amperes
- Contact Resistance: 10 Milliohms Maximum
- Dielectric Withstanding Voltage: 2000 V AC rms at Sea Level
- Insulation Resistance: 5000 Megohms Minimum
- Operating Temperature: -65 to +125 Degrees C
- Insertion and Withdrawal Force: 2 to 16 oz (0.56 to 4.45 N) per Contact Position

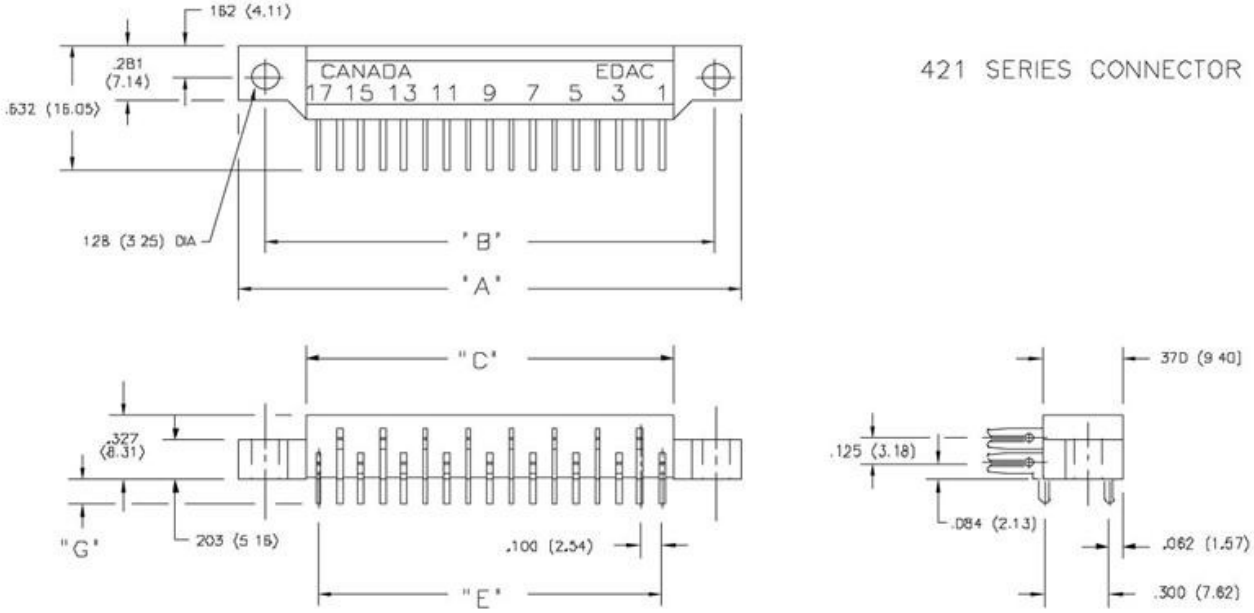

Downloaded from Elcodis.com electronic components distributor

422 SERIES CONNECTOR

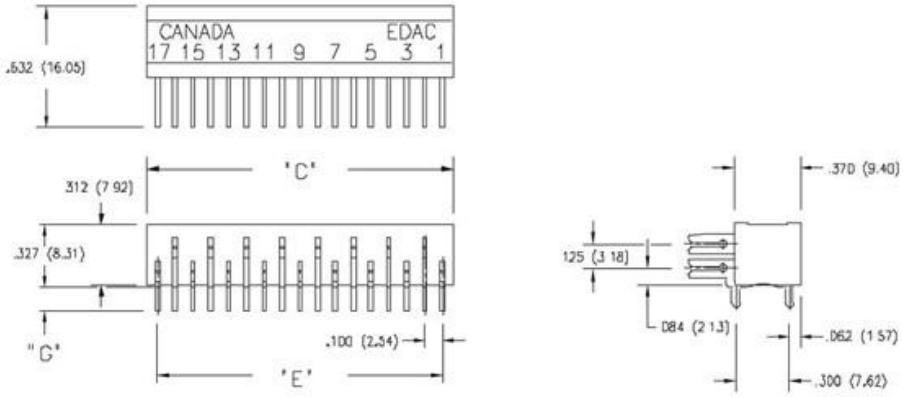

423 SERIES CONNECTOR

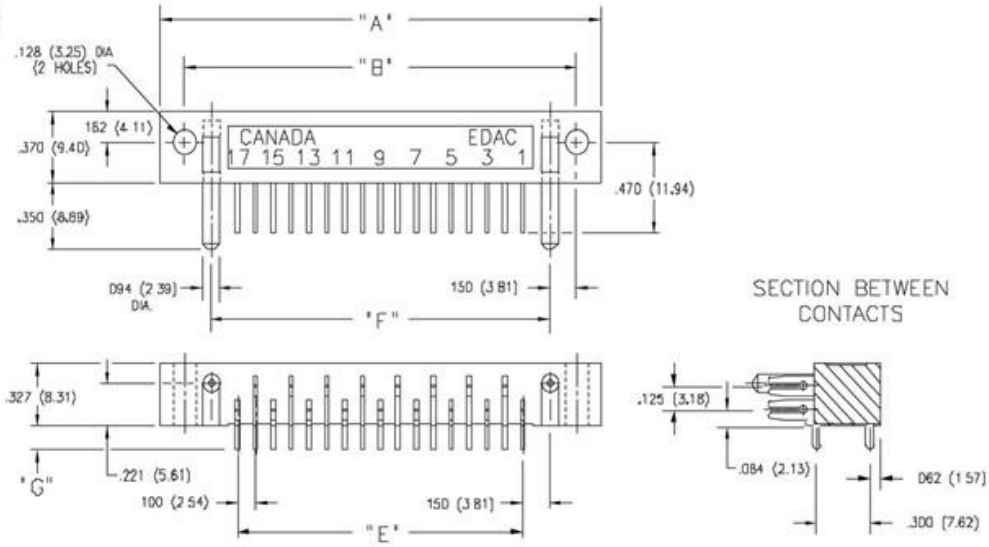

CONNECTOR MOUNTING PATTERN

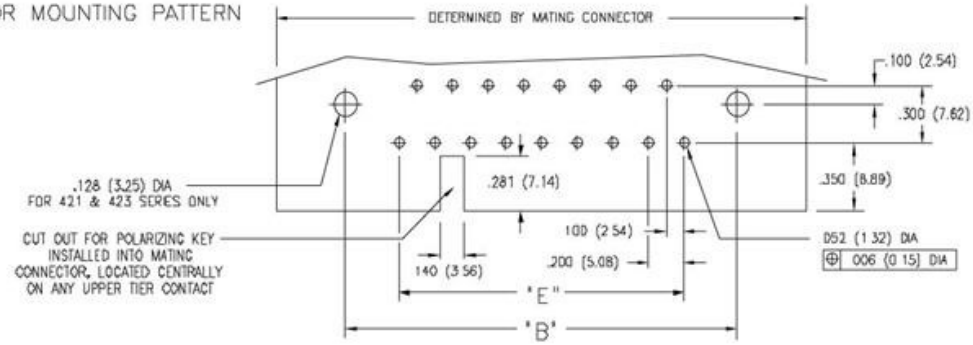

NUMBER OF CONTACTS	"A"				"B"				"C"		"E"		"F"	
	421		423		421		423		421, 422		421, 422, 423		423	
	Inch	(mm)	Inch	(mm)	Inch	(mm)	Inch	(mm)	Inch	(mm)	Inch	(mm)	Inch	(mm)
17	2.370	(60.20)	2.470	(62.74)	2.100	(53.34)	2.200	(55.88)	1.714	(43.54)	1.600	(40.64)	1.900	(48.26)
23	2.970	(75.44)	3.070	(77.98)	2.700	(68.58)	2.800	(71.12)	2.314	(58.78)	2.200	(55.88)	2.500	(63.50)
29	3.570	(90.68)	3.670	(93.22)	3.300	(83.82)	3.400	(86.36)	2.914	(74.02)	2.800	(71.12)	3.100	(78.74)
35	4.170	(105.92)	4.270	(108.46)	3.900	(99.06)	4.000	(101.60)	3.514	(89.26)	3.400	(86.36)	3.700	(93.98)
41	4.770	(121.16)	4.870	(123.70)	4.500	(114.30)	4.600	(116.84)	4.114	(104.50)	4.000	(101.60)	4.300	(109.22)
47	5.370	(136.40)	5.470	(138.94)	5.100	(129.54)	5.200	(132.08)	4.714	(119.74)	4.600	(116.84)	4.900	(124.46)

Downloaded from Elcodis.com electronic components distributor

408/424 SERIES METAL TO METAL (TWO PIECE) CONNECTOR

Receptacle

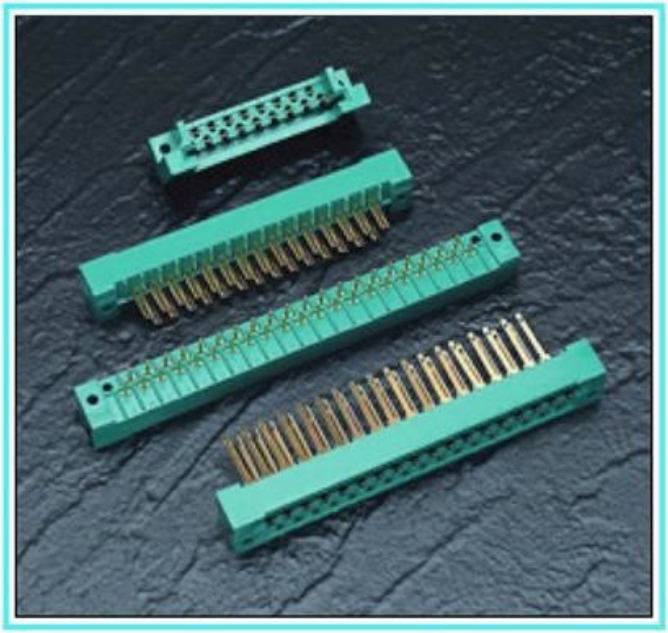

408/424 SERIES ORDERING CODE

Example Part Number 424 - 041 - 500 - 112

- **Series** — 424
- **Total Number of Contacts** — 041
- **Contact Code** — 500
- **Card Slot Width & Mounting Options** — 112

Series	Insulator Card Slot Ends
408	Closed Card Slot Ends
424	Open Card Slot Ends per MIL-C-21097

Total Number of Contacts

017, 023, 029, 035, 041

Contact Code [1, 2]	Description & Tail Size	Tail Length "G"
500	Wire Hole .115 x .025 (2.92 x 0.64)	.326 (8.28)
502	Fork Tail .115 x .025 (2.92 x 0.64)	.168 (4.27)
520	P.C. Tail .044 x .025 (1.12 x 0.64)	.123 (3.12)
521	P.C. Tail .044 x .025 (1.12 x 0.64)	.154 (3.91)
522	P.C. Tail .044 x .025 (1.12 x 0.64)	.186 (4.72)
523	P.C. Tail .044 x .025 (1.12 x 0.64)	.123 (3.12)
524	P.C. Tail .044 x .025 (1.12 x 0.64)	.154 (3.91)
525	P.C. Tail .044 x .025 (1.12 x 0.64)	.186 (4.72)
540	Wire Wrap .060 x .025 (1.52 x 0.64)	.744 (18.90)
541	Wire Wrap .060 x .025 (1.52 x 0.64)	.744 (18.90)
542	Wire Wrap .060 x .025 (1.52 x 0.64)	.965 (24.51)

Card Slot Width and Mounting Options [3]		Description
112	Accepts .062 (1.57) Board	.128 (3.25) Dia. Mounting Holes
122	Accepts .093 (2.36) Board	.128 (3.25) Dia. Mounting Holes
212	Accepts .062 (1.57) Board	.128 (3.25) Dia. Mounting Holes With Card Guides
222	Accepts .093 (2.36) Board	.128 (3.25) Dia. Mounting Holes With Card Guides

Ordering Code Notes

1) Contact codes 523, 524 and 525 are designed for .150 (3.81) row spacing connectors.
2) Contact code 540 has a wire hole at the tip of the tail (page 69).
3) Mounting options 212 and 222 are available on the 408 series connectors only.

FEATURES

- .200 (5.08) Contact Spacing x .125 (3.18) or .150 (3.81) Row Spacing with Staggered Grid
- Accepts .062 (1.57) or .093 (2.36) Nominal Thickness P.C. Board
- Edacon Hermaphroditic Contact Mating Design
- Contact Termination Options include P.C. Tail, Fork Tail, Wire Hole and Wire Wrap
- Open or Closed Card Slot Ends, Card Guides Optional
- Accepts Polarizing Keys without Loss of Contact Position
- 408 Series without Card Guides Designed to Mate with 421 Series, 408 Series with Card Guides Designed to Mate with 422 Series, 424 Series Designed to Mate with 423 Series

SPECIFICATIONS

- Insulator Material: Polyphenylene Sulphide, UL 94V-0, Colour: Green
- Contact Material: Phosphor Bronze Alloy CA-510
- Contact Plating: Gold over Nickel for Entire Contact
- Current Rating: 10 Amperes
- Contact Resistance: 10 Milliohms Maximum
- Dielectric Withstanding Voltage: 2000 V AC rms at Sea Level
- Insulation Resistance: 5000 Megohms Minimum
- Operating Temperature: -65 to +125 Degrees C
- Insertion and Withdrawal Force: 2 to 16 oz (0.56 to 4.45 N) per Contact Position

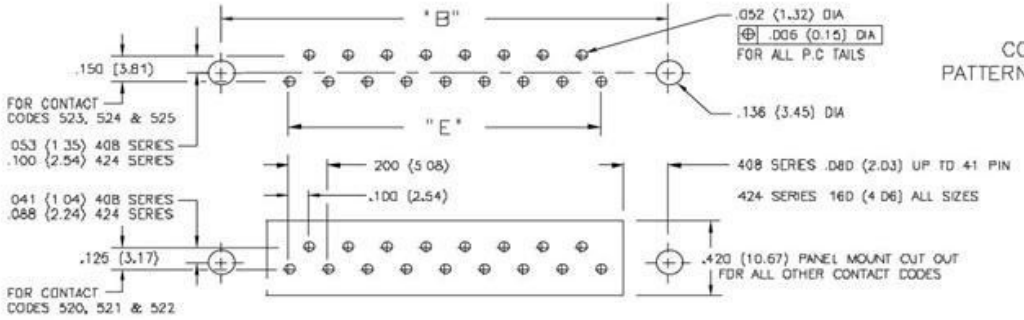

CONNECTOR MOUNTING PATTERNS FOR 408 & 424 SERIES

Downloaded from Elcodis.com electronic components distributor

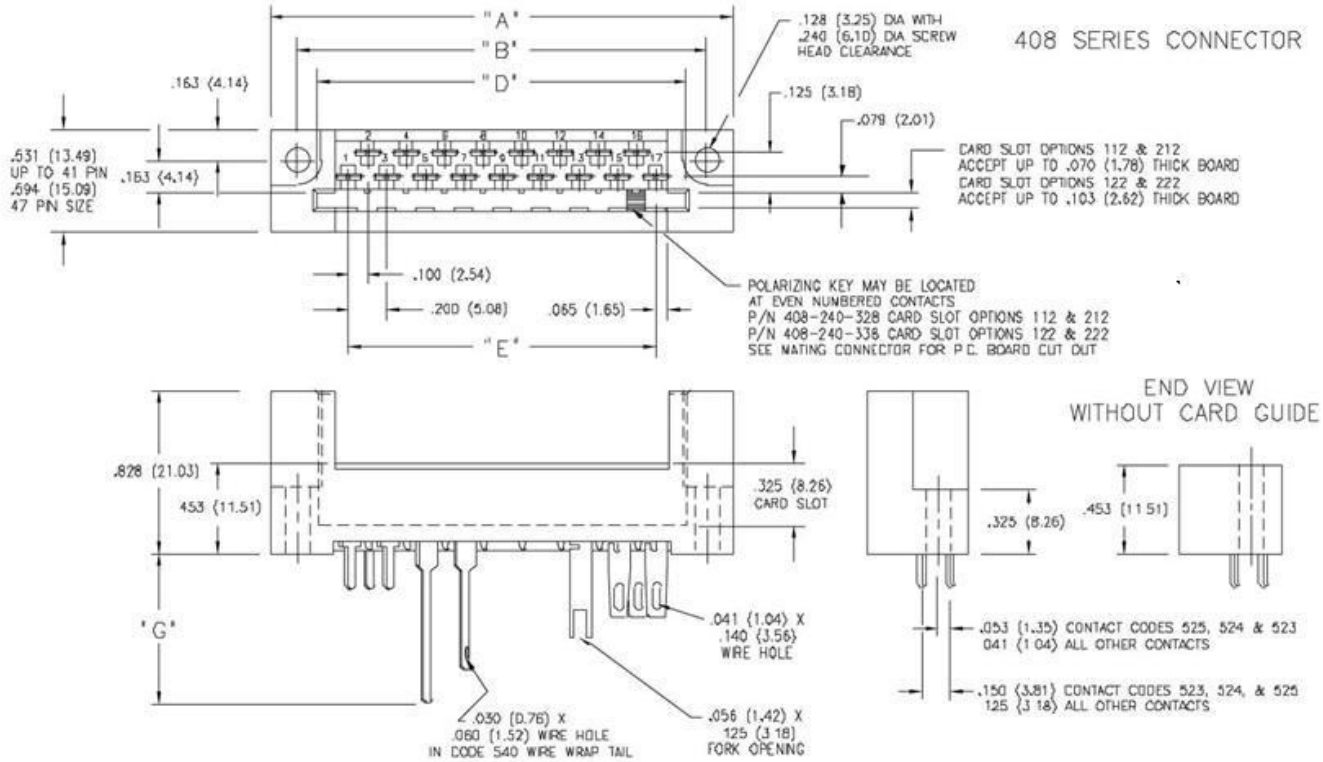

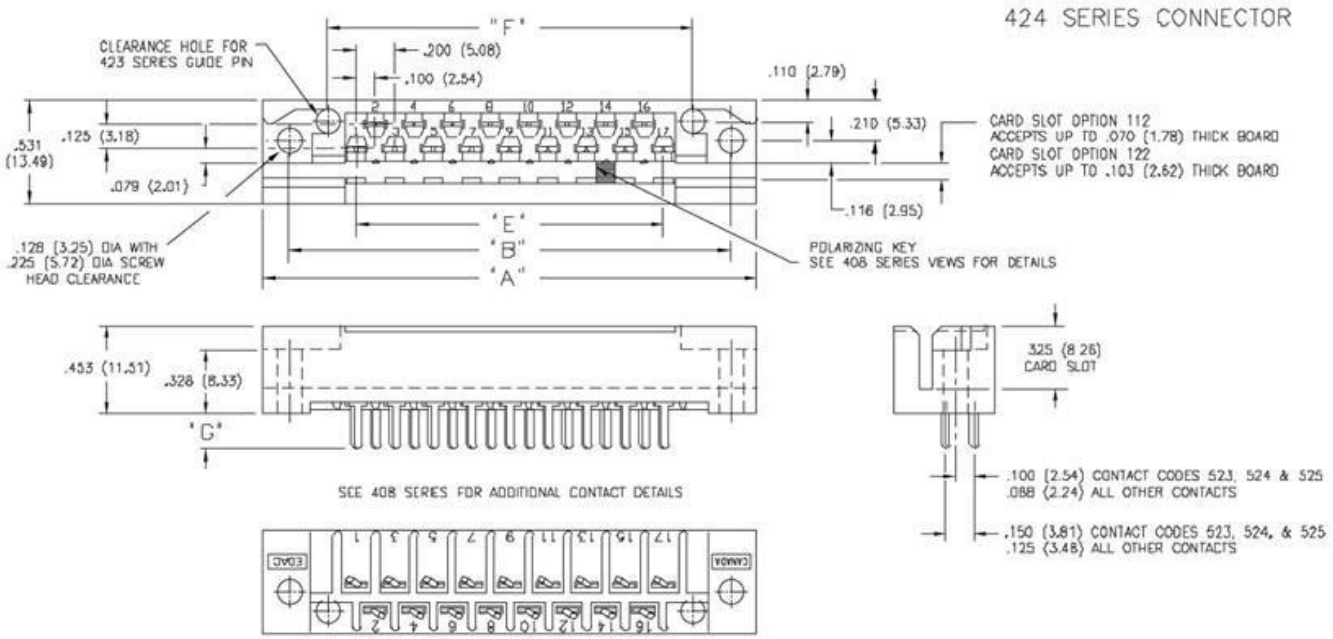

NUMBER OF CONTACTS	"A"		"B"		"D"	"E"	"F"
	408	424	408	424	408	408, 424	424
	Inch (mm)	Inch (mm)	Inch (mm)	Inch (mm)	Inch (mm)	Inch (mm)	Inch (mm)
17	2.406 (61.11)	2.570 (65.28)	2.134 (54.20)	2.300 (58.42)	1.920 (48.77)	1.600 (40.64)	1.900 (48.26)
23	3.006 (76.35)	3.170 (80.52)	2.734 (69.44)	2.900 (73.66)	2.520 (64.01)	2.200 (55.88)	2.500 (63.50)
29	3.606 (91.59)	3.770 (95.76)	3.334 (84.68)	3.500 (88.90)	3.120 (79.25)	2.800 (71.12)	3.100 (78.74)
35	4.206 (106.83)	4.370 (111.00)	3.934 (99.92)	4.100 (104.14)	3.720 (94.49)	3.400 (86.36)	3.700 (93.98)
41	4.806 (122.07)	4.970 (126.24)	4.534 (115.16)	4.700 (119.38)	4.320 (109.73)	4.000 (101.60)	4.300 (109.22)

Downloaded from Elcodis.com electronic components distributor

415/438 SERIES METAL TO METAL (TWO PIECE) CONNECTOR

Receptacle

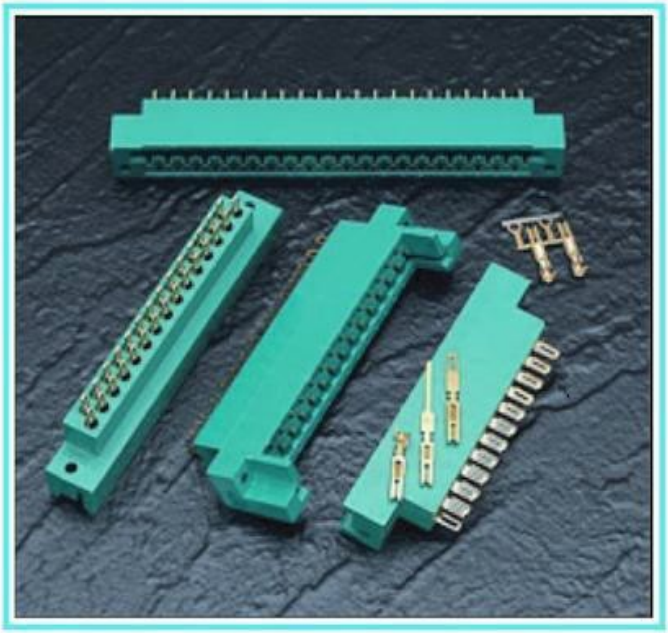

415/438 SERIES ORDERING CODE

Example Part Number 415 - 035 - 500 - 212

- **Series** — 415
- **Total Number of Contacts** — 035
- **Contact Code** — 500
- **Card Slot Width & Mounting Options** — 212

Series	Insulator Card Slot Ends
415	Closed Card Slot Ends
438	Open Card Slot Ends

Total Number of Contacts

017, 023, 029, 035, 041 or 047

Contact Code [1,2]	Description & Tail Size	Tail Length "G"
000	No Contacts Assembled	— —
500	Wire Hole .110 x .024 (2.79 x 0.61)	.245 (6.22)
520	P.C. Tail .025 x .024 (0.64 x 0.61)	.215 (5.46)
540	Wire Wrap .050 x .024 (1.27 x 0.61)	.600 (15.24)
541	Wire Wrap .026 x .024 (0.66 x 0.61)	.620 (15.75)
542	Wire Wrap .050 x .025 (1.27 x 0.61)	.790 (20.07)

Card Slot Width and Mounting Options [3]		Description
112	Accepts .062 (1.57) Board	.128 (3.25) Dia. Mounting Holes
122	Accepts .093 (2.36) Board	.128 (3.25) Dia. Mounting Holes
212	Accepts .062 (1.57) Board	.128 (3.25) Dia. Mounting Holes With Card Guides
222	Accepts .093 (2.36) Board	.128 (3.25) Dia. Mounting Holes With Card Guides

FEATURES

- .200 (5.08) Contact Spacing x .125 (3.18) Row Spacing with Staggered Grid
- Accepts .062 (1.57) or .093 (2.36) Nominal Thickness P.C. Board
- Edacon Hermaphroditic Contact Mating Design
- Contact Termination Options include Crimp, P.C. Tail, Wire Hole and Wire Wrap
- Open or Closed Card Slot Ends, Card Guides Optional
- Accepts Polarizing Keys without Loss of Contact Position
- 415 Series without Card Guides Designed to Mate with 421 Series, 415 Series with Card Guides Designed to Mate with 422 Series, 438 Series Designed to Mate with 423 Series

SPECIFICATIONS

- Insulator Material: Diallyl Phthalate, UL 94V-0, Colour: Green
- Contact Material: Phosphor Bronze Alloy CA-510
- Contact Plating: Gold over Nickel for Entire Contact
- Current Rating: 8.5 Amperes
- Contact Resistance: 10 Milliohms Maximum
- Dielectric Withstanding Voltage: 2000 V AC rms at Sea Level
- Insulation Resistance: 5000 Megohms Minimum
- Operating Temperature: -65 to +125 Degrees C
- Insertion and Withdrawal Force: 2 to 16 oz (0.56 to 4.45 N) per Contact Position

Ordering Code Notes

1) Crimp contacts are also available for the 415 and 438 series connectors. Contacts may be ordered separately for pre-wired or select position assembly.

Part Number	Description	Silhouette
516-290-500	Wire Hole	
516-290-520	P.C. Tail	
516-290-540	Wire Wrap	
516-290-541	Wire Wrap	
516-290-542	Wire Wrap	
516-290-590	Crimp - Loose	
516-290-591	Crimp - 1800 Contacts per Reel	

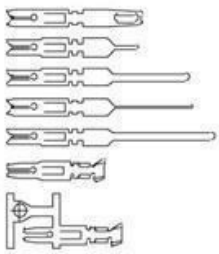

2) For contact installation, removal and crimping tools, refer to page 72.
3) Mounting options 212 and 222 are available on the 415 series connectors only.

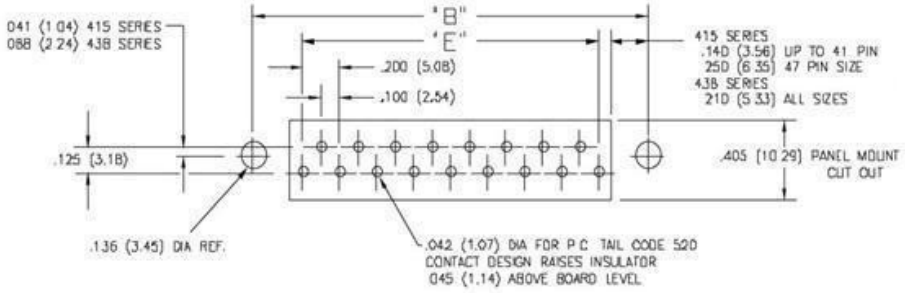

CONNECTOR MOUNTING PATTERN FOR 415 & 438 SERIES

Downloaded from Elcodis.com electronic components distributor

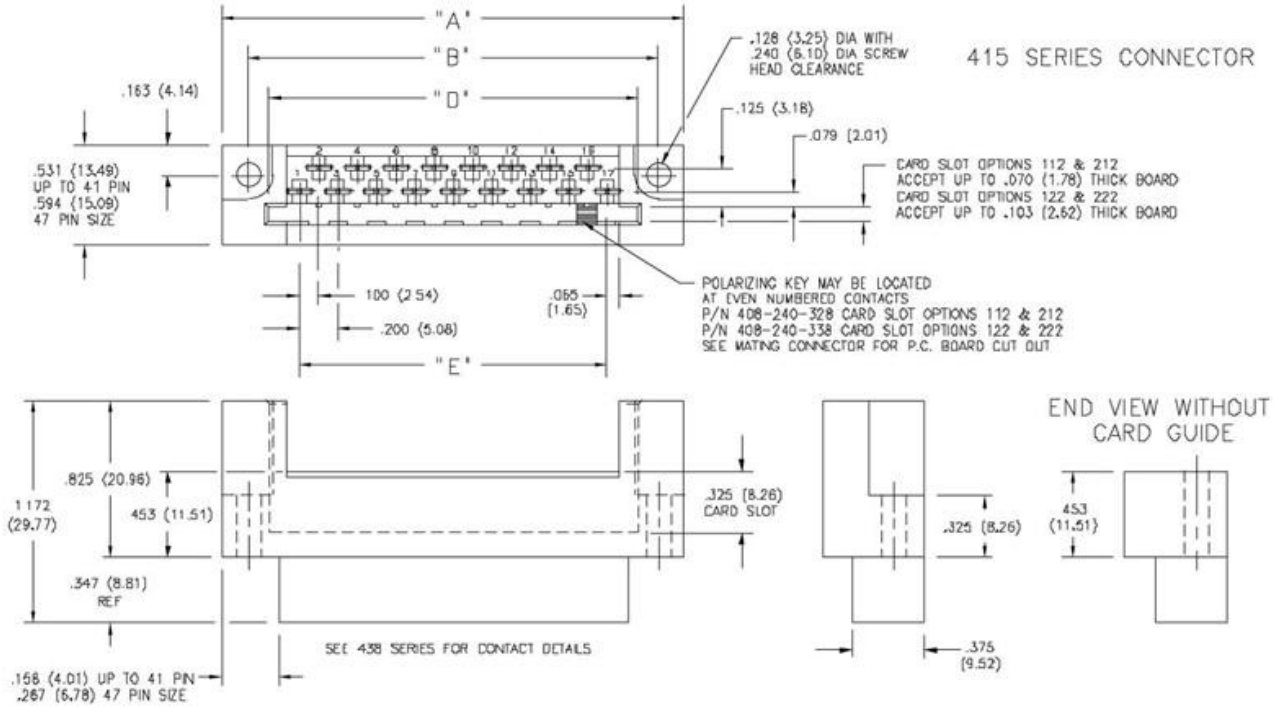

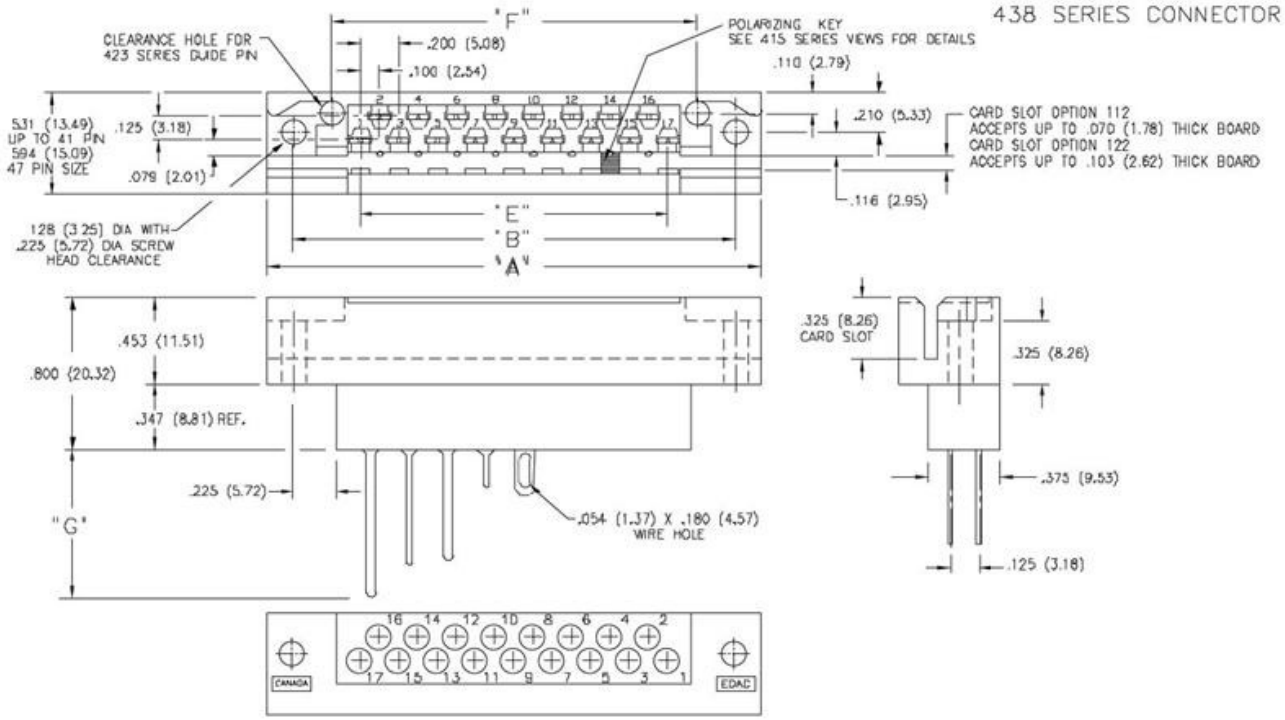

NUMBER OF CONTACTS	"A"				"B"				"D"		"E"		"F"	
	415		438		415		438		415		415, 438		438	
	Inch	(mm)	Inch	(mm)	Inch	(mm)	Inch	(mm)	Inch	(mm)	Inch	(mm)	Inch	(mm)
17	2.406	(61.11)	2.570	(65.28)	2.134	(54.20)	2.300	(58.42)	1.920	(48.77)	1.600	(40.64)	1.900	(48.26)
23	3.006	(76.35)	3.170	(80.52)	2.734	(69.44)	2.900	(73.66)	2.520	(64.01)	2.200	(55.88)	2.500	(63.50)
29	3.606	(91.59)	3.770	(95.76)	3.334	(84.68)	3.500	(88.90)	3.120	(79.25)	2.800	(71.12)	3.100	(78.74)
35	4.206	(106.83)	4.370	(111.00)	3.934	(99.92)	4.100	(104.14)	3.720	(94.49)	3.400	(86.36)	3.700	(93.98)
41	4.806	(122.07)	4.970	(126.24)	4.534	(115.16)	4.700	(119.38)	4.320	(109.73)	4.000	(101.60)	4.300	(109.22)
47	5.620	(142.75)	5.570	(141.48)	5.352	(135.94)	5.300	(134.62)	5.030	(127.76)	4.600	(116.84)	4.900	(124.46)

Downloaded from Elcodis.com electronic components distributor

417 SERIES METAL TO METAL (TWO PIECE) CONNECTOR

Plug

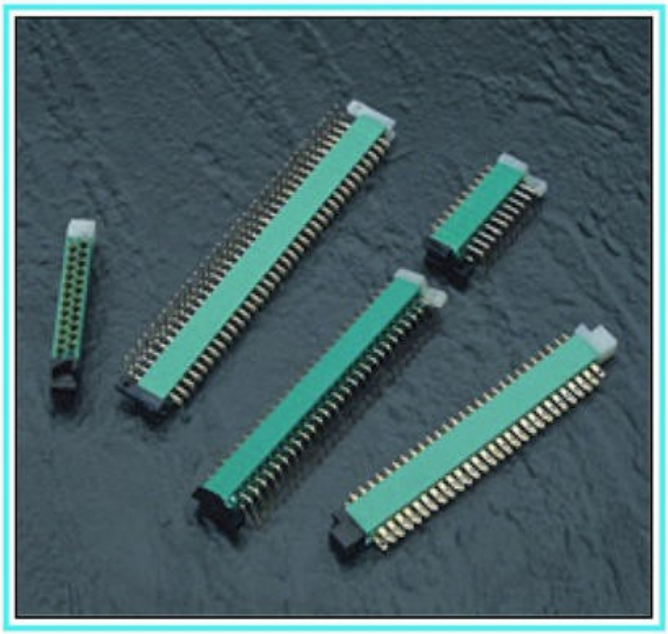

FEATURES

- .100 (2.54) Contact Spacing x .100 (2.54) Row Spacing with Staggered Grid
- Edacon Hermaphroditic Contact Mating Design
- Contact Termination Options include P.C. Tail, Wire Hole and 90 Degree Bends
- Polarizing End Guides Included, Centre Guide Optional
- Self Tapping Screws or Mounting Eyelets Supplied
- Designed to Mate with 418 Series

SPECIFICATIONS

- Insulator Material: Polyphenylene Sulphide, UL 94V-0, Colour: Green
- Contact Material: Phosphor Bronze Alloy CA-510
- Contact Plating: Gold over Nickel for Entire Contact
- Current Rating: 5 Amperes Continuous
- Contact Resistance: 10 Milliohms Maximum
- Dielectric Withstanding Voltage: 1000 V AC rms at Sea Level
- Insulation Resistance: 5000 Megohms Minimum
- Operating Temperature: -65 to +125 Degrees C
- Insertion and Withdrawal Force: 2 to 16 oz (0.56 to 4.45 N) per Contact Position

417 SERIES ORDERING CODE

Example Part Number 417 - 054 - 560 - 401

- **Series** — 417
- **Total Number of Contacts** — 054
- **Contact Code** — 560
- **Guide and Mounting Options** — 401

Series 417

Total Number of Contacts [1]	Description
002, 004,...076	With End Guides Only
004, 008,...152	With End and Centre Guides

Contact Code [2]	Description & Tail Size	Tail Length "G"
500	Wire Hole .054 x .020 (1.37 x 0.51)	.157 (3.99)
520	P.C. Tail .020 (0.51) Square	.093 (2.36)
522	P.C. Tail .020 (0.51) Octagonal	.250 (6.35)
541	P.C. Tail .020 (0.51) Octagonal	.453(11.51)
560	90 Degree Bend (Code 522 and 541 Contacts)	
561	90 Degree Bend (Code 522 and 541 Contacts)	

Guide and Mounting Options [2]	Description
401	End Guides Only - 2 Mounting Holes
501	End and Centre Guides - 3 Mounting Holes

Ordering Code Notes

1) All connector sizes up to 76 contacts (end guides only) or up to 152 contacts (end and centre guides) are available upon request.
2) Connectors with wire hole or p.c. tail contacts are supplied with self tapping screws. Connectors with 90 degree bend contacts are supplied with eyelets.

Downloaded from Elcodis.com electronic components distributor

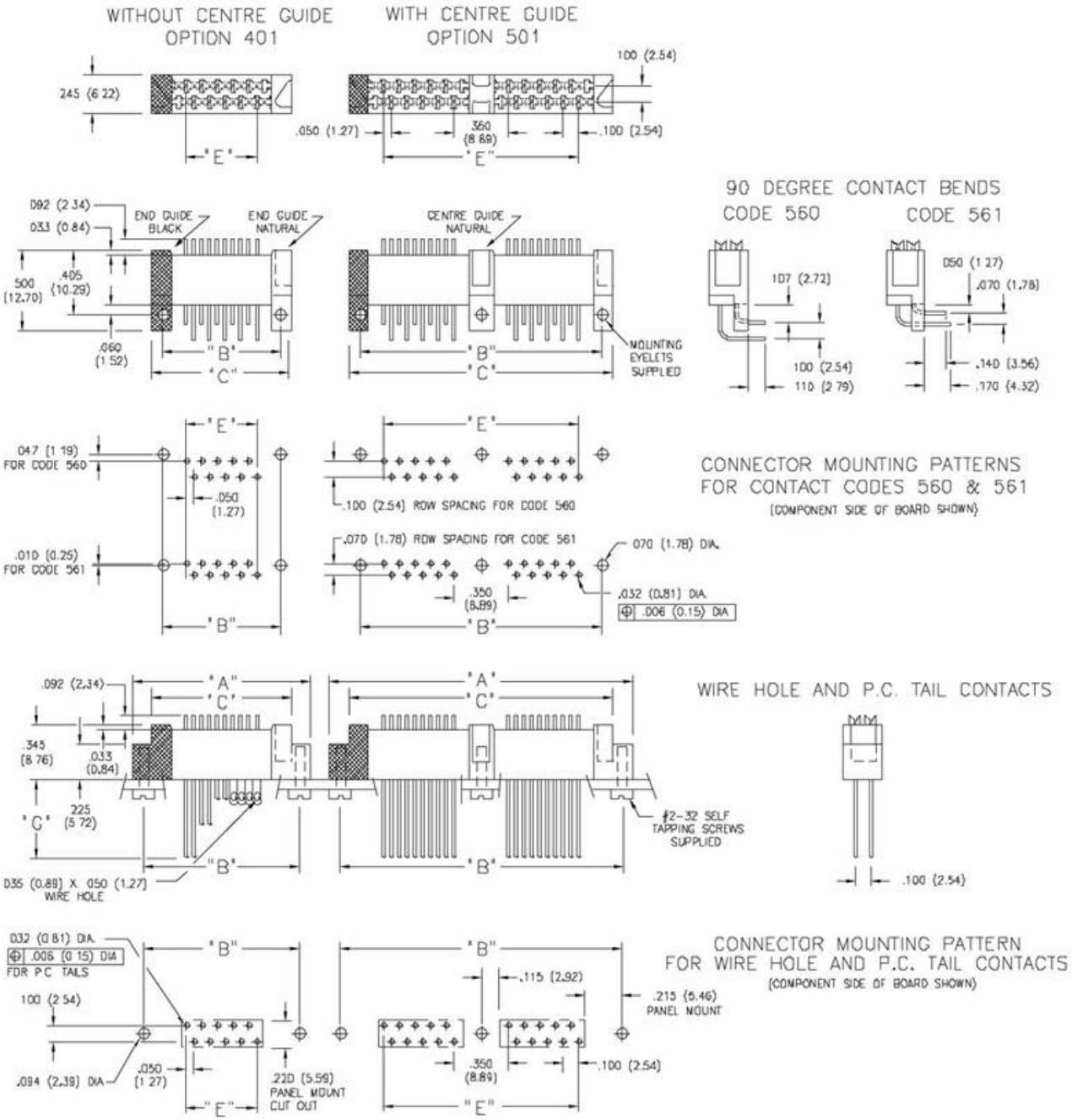

WITHOUT CENTRE GUIDE	"A"		"B" Straight Tails		"B" 90° Bend Tails		"C"		"E"	
NUMBER OF CONTACTS	Inch	(mm)	Inch	(mm)	Inch	(mm)	Inch	(mm)	Inch	(mm)
2	.740	(18.80)	.600	(15.24)	.350	(8.89)	.490	(12.45)	.050	(1.27)
20	1.640	(41.66)	1.500	(38.10)	1.250	(31.75)	1.390	(35.31)	.950	(24.13)
42	2.740	(69.60)	2.600	(66.04)	2.350	(59.69)	2.490	(63.25)	2.050	(52.07)
54	3.340	(84.84)	3.200	(81.28)	2.950	(74.93)	3.090	(78.49)	2.650	(67.31)
70	4.140	(105.16)	4.000	(101.60)	3.750	(95.25)	3.890	(98.81)	3.450	(87.63)
76	4.440	(112.78)	4.300	(109.22)	4.050	(102.87)	4.190	(106.43)	3.750	(95.25)
WITH CENTRE GUIDE	**"A"**		**"B" Straight Tails**		**"B" 90° Bend Tails**		**"C"**		**"E"**	
NUMBER OF CONTACTS	Inch	(mm)	Inch	(mm)	Inch	(mm)	Inch	(mm)	Inch	(mm)
4	1.140	(28.96)	1.000	(25.40)	.750	(19.05)	.890	(22.61)	.450	(11.43)
104	6.140	(155.96)	6.000	(152.40)	5.750	(146.05)	5.890	(149.61)	5.450	(138.43)
108	6.340	(161.04)	6.200	(157.48)	5.950	(151.13)	6.090	(154.69)	5.650	(143.51)
152	8.540	(216.92)	8.400	(213.36)	8.150	(207.01)	8.290	(210.57)	7.850	(199.39)

Downloaded from Elcodis.com electronic components distributor

418 SERIES METAL TO METAL (TWO PIECE) CONNECTOR

Receptacle

FEATURES

- .100 (2.54) Contact Spacing x .100 (2.54) Row Spacing with Staggered Grid
- Edacon Hermaphroditic Contact Mating Design
- Contact Termination Options include P.C. Tail, Wire Hole and 90 Degree Bends
- Polarizing End Guides Included, Centre Guide Optional
- Self Tapping Screws or Mounting Eyelets Supplied
- Designed to Mate with 417 Series

SPECIFICATIONS

- Insulator Material: Polyphenylene Sulphide, UL 94V-0, Colour: Green
- Contact Material: Phosphor Bronze Alloy CA-510
- Contact Plating: Gold over Nickel for Entire Contact
- Current Rating: 5 Amperes Continuous
- Contact Resistance: 10 Milliohms Maximum
- Dielectric Withstanding Voltage: 1000 V AC rms at Sea Level
- Insulation Resistance: 5000 Megohms Minimum
- Operating Temperature: -65 to +125 Degrees C
- Insertion and Withdrawal Force: 2 to 16 oz (0.56 to 4.45 N) per Contact Position

418 SERIES ORDERING CODE

Example Part Number 418 - 108 - 520 - 501

- **Series** — 418
- **Total Number of Contacts** — 108
- **Contact Code** — 520
- **Guide and Mounting Options** — 501

Series 418

Total Number of Contacts [1]	Description
002, 004,...076	With End Guides Only
004, 008,...152	With End and Centre Guides

Contact Code [2]	Description & Tail Size	Tail Length "G"
500	Wire Hole .054 x .020 (1.37 x 0.51)	.187 (4.75)
520	P.C. Tail .020 (0.51) Square	.123 (3.12)
522	P.C. Tail .020 (0.51) Octagonal	.280 (7.11)
541	P.C. Tail .020 (0.51) Octagonal	.483 (12.27)
560	90 Degree Bend (Code 522 and 541 Contacts)	
561	90 Degree Bend (Code 522 and 541 Contacts)	

Guide and Mounting Options [2]	Description
401	End Guides Only - 2 Mounting Holes
501	End and Centre Guides - 3 Mounting Holes

Ordering Code Notes

1) All connector sizes up to 76 contacts (end guides only) or up to 154 contacts (end and centre guides) are available upon request.
2) Connectors with wire hole or p.c. tail contacts are supplied with self tapping screws. Connectors with 90 degree bend contacts are supplied with eyelets for the end guides only.

Downloaded from Elcodis.com electronic components distributor

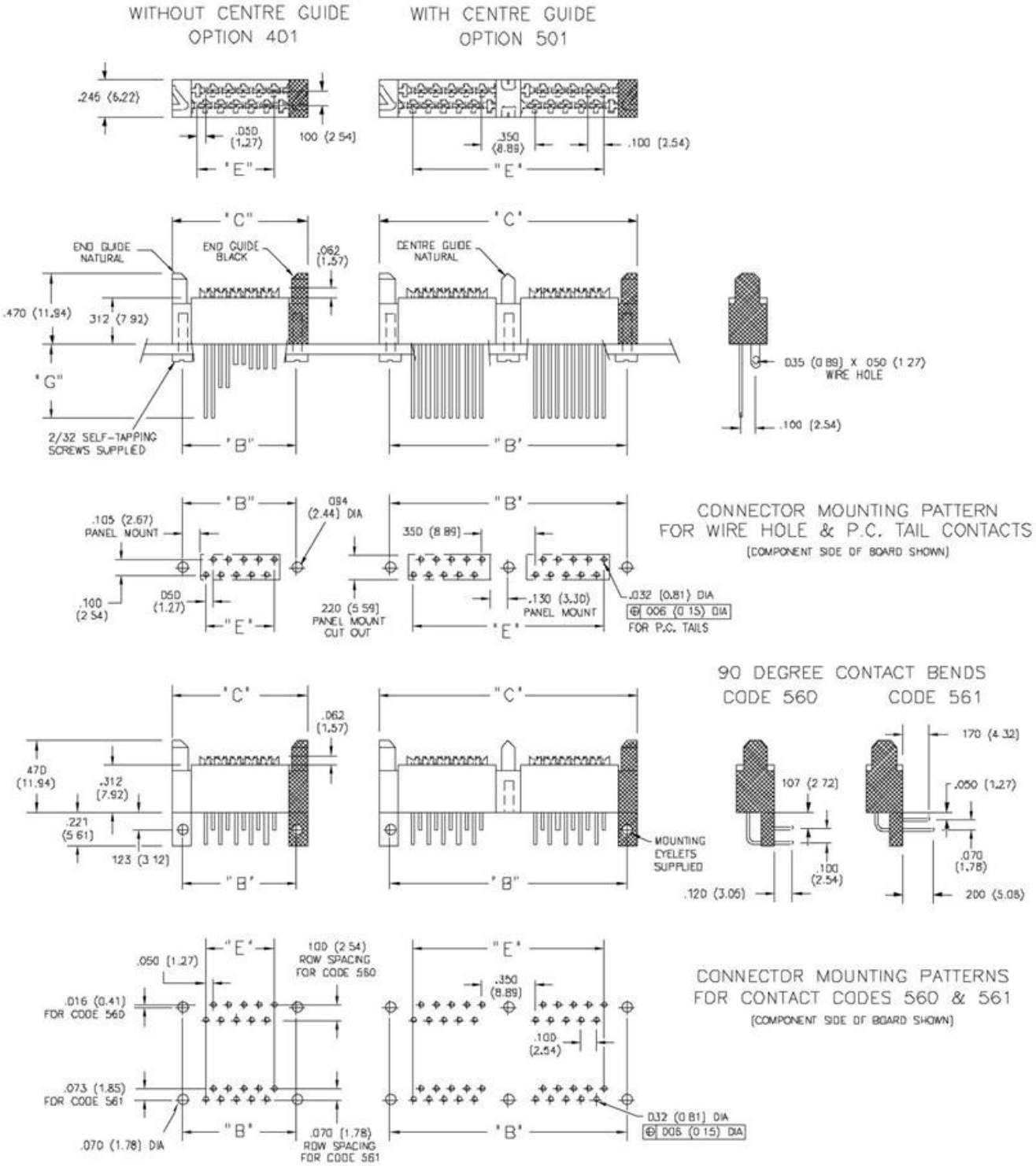

WITHOUT CENTRE GUIDE							WITH CENTRE GUIDE						
NUMBER OF CONTACTS	"B"		"C"		"E"		NUMBER OF CONTACTS	"B"		"C"		"E"	
	Inch	(mm)	Inch	(mm)	Inch	(mm)		Inch	(mm)	Inch	(mm)	Inch	(mm)
2	.350	(8.89)	.490	(12.45)	.050	(1.27)	4	.750	(19.05)	.890	(22.61)	.450	(11.43)
20	1.250	(31.75)	1.390	(35.31)	.950	(24.13)	104	5.750	(146.05)	5.890	(149.61)	5.450	(138.43)
42	2.350	(59.69)	2.490	(63.25)	2.050	(52.07)	108	5.950	(151.13)	6.090	(154.69)	5.650	(143.51)
54	2.950	(74.93)	3.090	(78.49)	2.650	(67.31)	152	8.150	(207.01)	8.290	(210.57)	7.850	(199.39)
70	3.750	(95.25)	3.890	(98.81)	3.450	(87.63)							
76	4.050	(102.87)	4.190	(106.43)	3.750	(95.25)							

Downloaded from Elcodis.com electronic components distributor

516 SERIES RACK & PANEL CONNECTOR

Plug and Receptacle

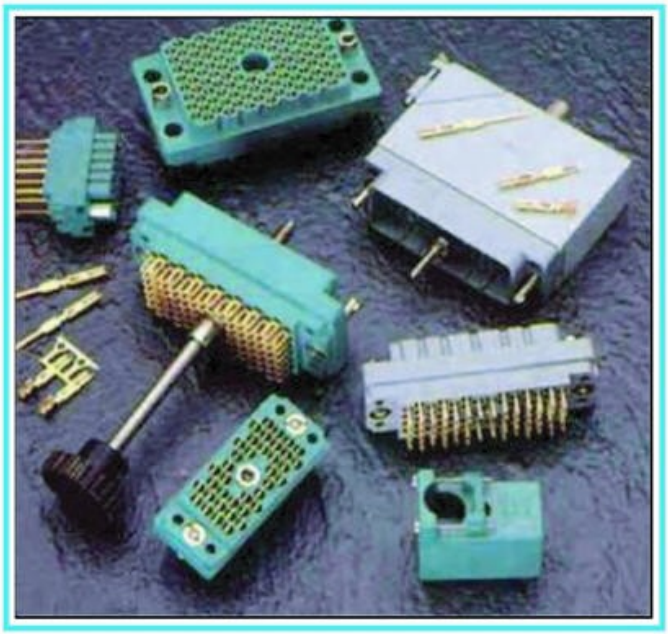

FEATURES

- UL Recognized
- .150 (3.81) Contact Spacing x .130 (3.30) or .150 (3.81) Row Spacing with Staggered Grid
- Plug and Receptacle in 20, 38, 56, 90 or 120 Contact Sizes
- Edacon Hermaphroditic Contact Mating Design
- Contact Termination Options include Crimp, P.C. Tail, Wire Hole and Wire Wrap
- Mating and Unmating Simplified with use of Actuating Screws
- Optional Covers with Side or Top Entry Cable Clamp in Plastic or Metal Material Available for all Connector Sizes
- Versatile Metal Cover Design permits Assembly or Disassembly After Cabling is Complete plus Cable Entry Style Flexibility
- Actuating Screws, Locknuts, Polarizing Hardware, Covers and Contacts Suitable for either Plug or Receptacle
- Polarizing Hardware Adjustable for 288 Mating Combinations
- Tools Available for Contact Installation, Removal and Crimping and Polarizing Changes

SPECIFICATIONS

- Insulator Material: Diallyl Phthalate or Thermoplastic Polyester, UL 94V-0, Colour: Green, or Polycarbonate, Colour: Grey
- Contact Material: Phosphor Bronze Alloy CA-510
- Contact Plating: Gold over Nickel for Entire Contact
- Cover Material: Polycarbonate, Colour: Green, or Die-Cast Zinc, Finished with Grey Enamel Paint
- Current Rating: 8.5 Amperes
- Contact Resistance: 10 Milliohms Maximum
- Dielectric Withstanding Voltage: 2000 V AC rms at Sea Level
- Insulation Resistance: 5000 Megohms Minimum
- Operating Temperature: -65 to +125 Degrees C
- Insertion and Withdrawal Force: 2 to 16 oz (0.56 to 4.45 N) per Contact Position

516 SERIES ORDERING CODE

Example Part Number 516 - 038 - 500 - 2 1 2

- **Series** — 516
- **Total Number of Contacts** — 038
- **Contact Code** — 500
- **Style and Material** — 2
- **Cover Code** — 1
- **Hardware Code** — 2

Series 516

Total Number of Contacts
020, 038, 056, 090 or 120

Contact Code [1, 2]	Description & Tail Size	Tail Length "G"
000	No Contacts Assembled	— —
500	Wire Hole .110 x .024 (2.79 x 0.61)	.245 (6.22)
520	P.C. Tail .025 x .024 (0.64 x 0.61)	.215 (5.46)
540	Wire Wrap .050 x .024 (1.27 x 0.61)	.600 (15.24)
541	Wire Wrap .026 x .024 (0.66 x 0.61)	.620 (15.75)
542	Wire Wrap .050 x .024 (1.27 x 0.61)	.790 (20.07)

Style and Material [3]	Style	Insulator Material
1	Plug	Green Diallyl Phthalate
2	Receptacle	Green Diallyl Phthalate
3	Plug	Grey Polycarbonate
4	Receptacle	Grey Polycarbonate
5	Plug	Green Polyester
6	Receptacle	Green Polyester

Cover Code [4, 5, 6, 7]	Description
0	No Cover Assembled
1	Plastic Cover, Top Entry Standard Clamp
2	Plastic Cover, Side Entry Standard Clamp
3	Plastic Cover, Top Entry Large Clamp
4	Plastic Cover, Side Entry Large Clamp
5	Metal Cover, Side Entry
6	Metal Cover, Top Entry

Hardware Code [8]	Description
0	No Hardware Assembled
1	Actuating Screw and Polarizing Hardware
2	Locknut and Polarizing Hardware
5	Actuating Screw with No Polarizing Hardware
6	Locknut with No Polarizing Hardware

Ordering Code Notes

1) Crimp contacts are also available for the 516 series connectors. Contacts may be ordered separately for pre-wired or select position assembly.

Part Number	Description	Silhouette
516-290-500	Wire Hole	
516-290-520	P.C. Tail	
516-290-540	Wire Wrap	
516-290-541	Wire Wrap	
516-290-542	Wire Wrap	
516-290-590	Crimp - Loose	
516-290-591	Crimp - 1800 Contacts per reel	

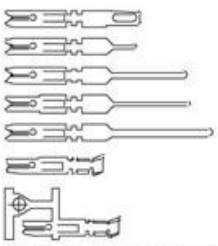

Continued on next page

Downloaded from Elcodis.com electronic components distributor

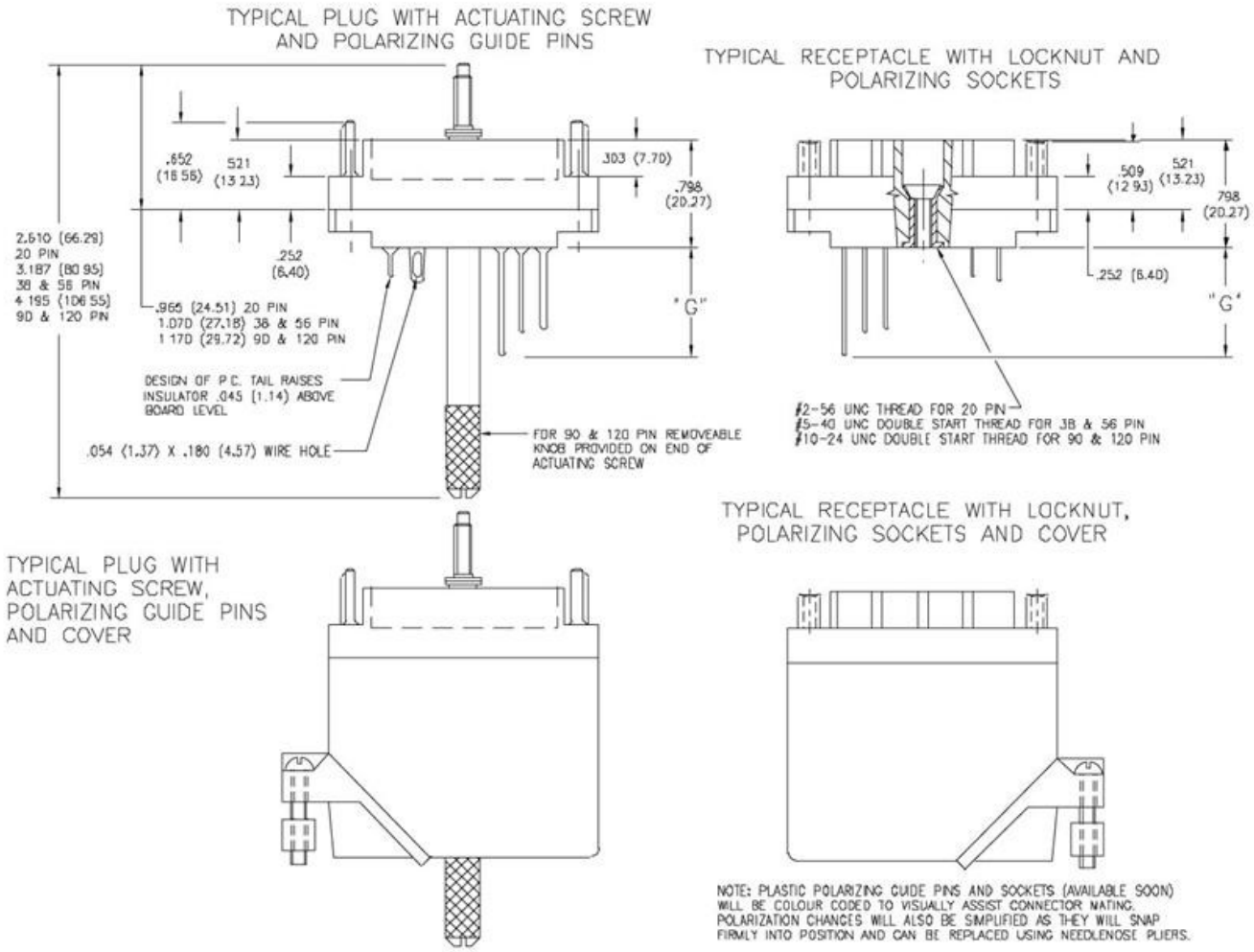

ORDERING CODE NOTES (Continued)

2) For contact installation, removal and crimping tools, refer to page 72.
3) Grey polycarbonate insulator material is not available for the 120 pin size connector.
4) The 20 pin connector cover will not accept the length of the wire wrap contacts.
5) Plastic covers with large clamps are only available for the 38 and 56 pin size connectors.
6) Metal covers with side entry may be converted to top entry by removing side plate and changing clamp orientation.
7) Covers may be ordered separately. Refer to page 88.
8) Insulator design prevents improper mating of individual plug and receptacle. Polarizing hardware enables specific plug and receptacle mating combinations.

CRIMP CHARACTERISTICS

- Contacts and Crimp Tools Accommodate from 28 AWG to 18 AWG, Solid or Stranded Conductor Diameters from .012 (0.30) to .049 (1.25) and an Insulation Diameter up to .074 (1.88)
- Multiple Smaller Gauge Wires may be Crimped Together
- Crimp Resistance from 0.5 Milliohms (18 AWG) to 1.5 Milliohms (28AWG)

POLARIZING CODES

- Polarizing Hardware Changes allow 288 Mating Combinations
- Standard Code Supplied for Plugs PG1G1, for Receptacles RS1S1. Connectors with Special Polarizing Codes Available upon Request
- Example Polarizing Code: **P G 4 S 2**

Type of Connector
P - Plug, R - Receptacle

Large Diameter Hardware
G - Guide Pin (at Contact Position "A" End)
H - Guide Pin (at Last Contact Position End)
S - Socket (at Contact Postion "A" End)
T - Socket (at Last Contact Position End)

Position of Large Diameter Keyway - 1 through 6

Small Diameter Hardware (Opposite End from Large Diameter)
G - Guide Pin, S - Socket

Position of Small Diameter Keyway - 1 through 6

This Example Mates with Code RS4G2

- Crimp Tensile Strength for Wire Sizes

18 AWG - 40 lbs (178 N)	20 AWG - 25 lbs (111 N)
22 AWG - 15 lbs (67 N)	24 AWG - 10 lbs (44 N)
26 AWG - 5 lbs (22 N)	28 AWG - 3 lbs (13 N)

Downloaded from Elcodis.com electronic components distributor

CONNECTOR MATING FACE VIEWS

DIMENSIONS INDICATED FOR EACH SIZE APPLY TO BOTH PLUG AND RECEPTACLE

20 PIN PLUG

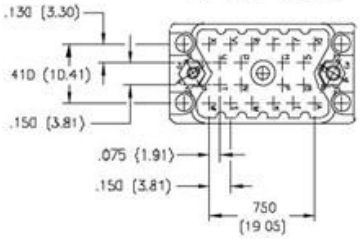

20 PIN RECEPTACLE

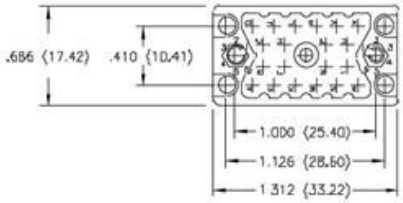

38 PIN PLUG

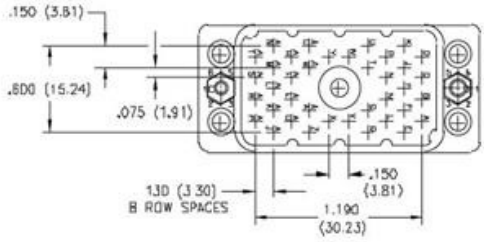

38 PIN RECEPTACLE

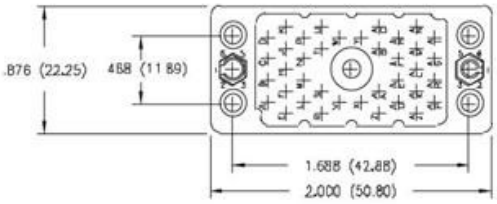

56 PIN PLUG

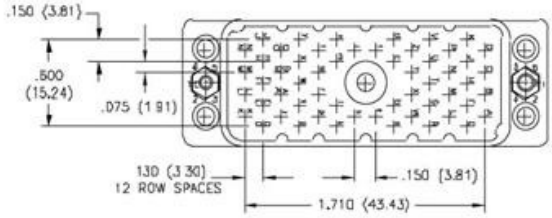

56 PIN RECEPTACLE

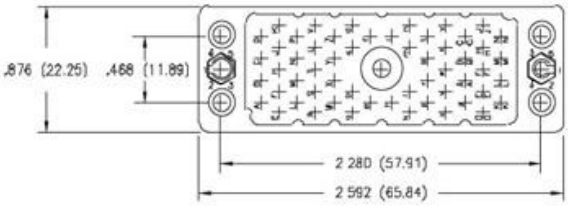

90 PIN PLUG

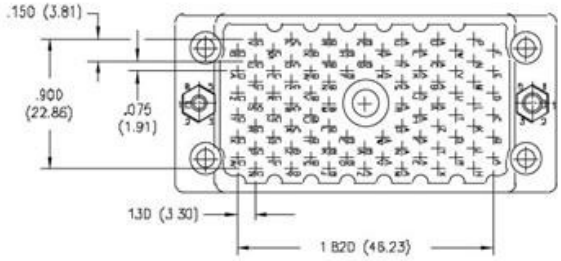

90 PIN RECEPTACLE

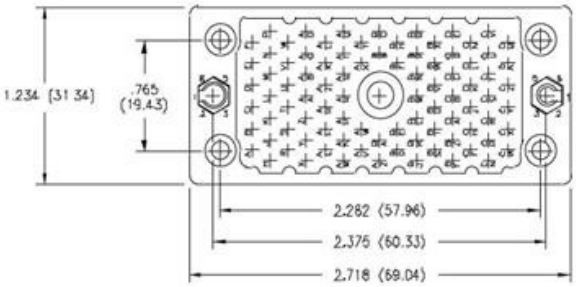

120 PIN PLUG

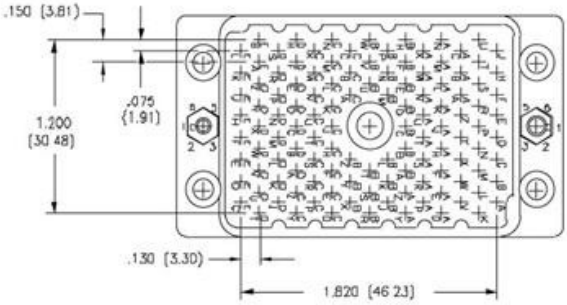

120 PIN RECEPTACLE

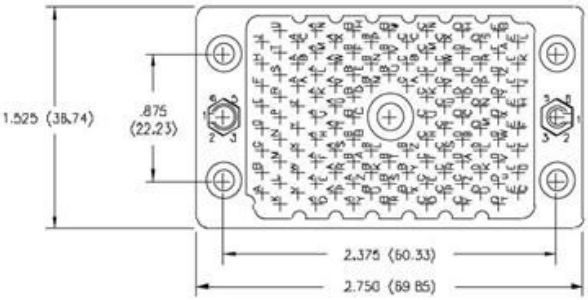

Downloaded from Elcodis.com electronic components distributor

516 SERIES COVER ORDERING CODE

Example Part Number 516 - 230 - 5 56

- **Series** — 516
- **Cover Identification Code** — 230
- **Cover Type** — 5
- **Cover Size** — 56

Series 516

Cover Identification Code 230

Cover Type [1, 2]	Description
1	Plastic Cover, Side Entry Standard Clamp
2	Plastic Cover, Top Entry Standard Clamp
3	Plastic Cover, Side Entry Large Clamp
4	Plastic Cover, Top Entry Large Clamp
5	Metal Cover, Side Entry
6	Metal Cover, Top Entry
7	Metal Cover, Large Clamp

Cover Size	Fits Connector
12	516 Series 120 Pin
20	516 Series 20 Pin and 519 Series 14 Pin
38	516 Series 38 Pin and 519 Series 36 Pin
56	516 Series 56 Pin
90	516 Series 90 Pin

Ordering Code Notes

1) Plastic covers with large clamps are only available for the 38 and 56 pin size connectors.
2) Metal covers with side entry may be converted to top entry by removing side plate and changing clamp orientation.

FEATURES

- Available in Metal (Die-Cast Zinc Finished with Grey Enamel Paint) or Plastic (Green Polycarbonate) Material
- Covers with Top or Side Entry Cable Clamp. Orientation of Clamp on Metal Covers may be changed by the Customer
- Versatile Metal Cover Design permits Assembly or Disassembly after Cabling is Complete
- Screws for Securing Cover to 516 or 519 Series Connectors Supplied

METAL COVERS

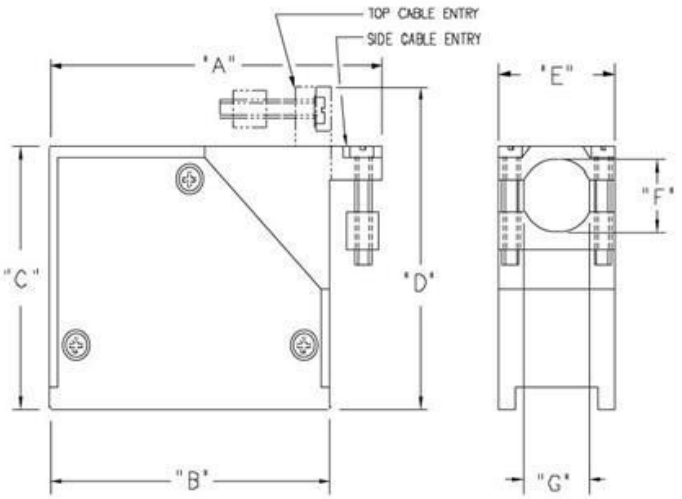

NEW COVER DESIGN (AVAILABLE SOON) WILL ELIMINATE 3 SCREWS FOR SIDE TO SIMPLIFY ASSEMBLY, DISASSEMBLY AND CLAMP ORIENTATION CHANGES

SCREWS FOR SECURING THE COVER TO THE CONNECTOR ARE SUPPLIED BY EDAC

PLASTIC COVERS

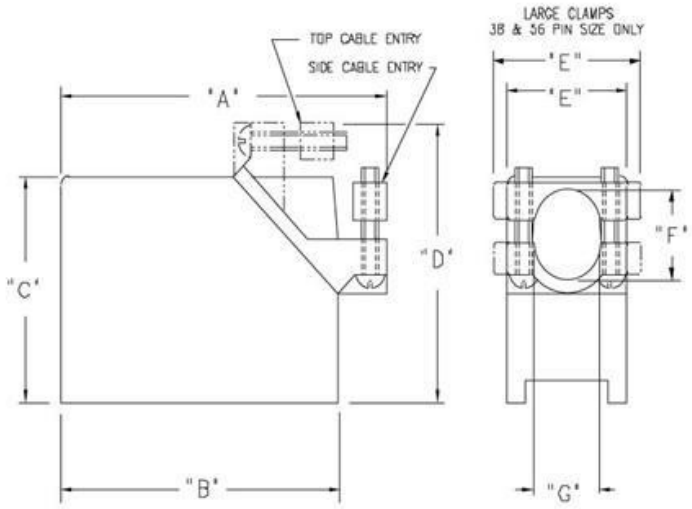

COVER FOR CONNECTOR	COVER MATERIAL	CLAMP SIZE	"A"		"B"		"C"		"D"		"E"		"F"		"G"	
			Inch	(mm)	Inch	(mm)	Inch	(mm)	Inch	(mm)	Inch	(mm)	Inch	(mm)	Inch	(mm)
20 Pin	Plastic	Standard	1.605	(40.77)	1.325	(33.66)	.906	(23.01)	1.190	(30.23)	.715	(18.16)	.450	(11.43)	.450	(11.43)
20 Pin	Metal	Standard	1.539	(39.09)	1.325	(33.66)	.906	(23.01)	1.120	(28.45)	.686	(17.42)	.446	(11.33)	.490	(12.45)
38 Pin	Plastic	Standard	2.460	(62.48)	2.010	(51.05)	1.530	(38.86)	1.985	(50.42)	.910	(23.11)	.650	(16.51)	.500	(12.70)
38 Pin	Plastic	Large	2.460	(62.48)	2.010	(51.05)	1.530	(38.86)	1.985	(50.42)	1.110	(28.19)	.650	(16.51)	.608	(15.44)
38 Pin	Metal	Standard	2.206	(56.03)	2.006	(50.95)	1.566	(39.78)	1.766	(44.86)	.875	(22.23)	.720	(18.29)	.575	(14.61)
56 Pin	Plastic	Standard	3.052	(77.52)	2.602	(66.09)	1.530	(38.86)	1.985	(50.42)	.910	(23.11)	.650	(16.51)	.500	(12.70)
56 Pin	Plastic	Large	3.052	(77.52)	2.602	(66.09)	1.530	(38.86)	1.985	(50.42)	1.110	(28.19)	.650	(16.51)	.608	(15.44)
56 Pin	Metal	Standard	2.802	(71.17)	2.602	(66.09)	1.566	(39.78)	1.766	(44.86)	.875	(22.23)	.720	(18.29)	.575	(14.61)
90 Pin	Plastic	Standard	3.124	(79.35)	2.718	(69.04)	1.775	(45.09)	2.181	(55.40)	1.250	(31.75)	.800	(20.32)	.800	(20.32)
90 Pin	Metal	Standard	3.118	(79.20)	2.718	(69.04)	1.775	(45.09)	2.175	(55.25)	1.234	(31.34)	.880	(22.35)	.900	(22.86)
120 Pin	Plastic	Standard	3.156	(80.16)	2.750	(69.85)	2.020	(51.31)	2.426	(61.62)	1.530	(38.86)	.800	(20.32)	1.080	(27.43)
120 Pin	Metal	Standard	3.175	(80.65)	2.750	(69.85)	2.020	(51.31)	2.445	(62.10)	1.531	(38.89)	.890	(22.61)	1.080	(27.43)

Downloaded from Elcodis.com electronic components distributor

516 SERIES RACK & PANEL CONNECTOR

Plug and Receptacle with EMI / REI Shielding

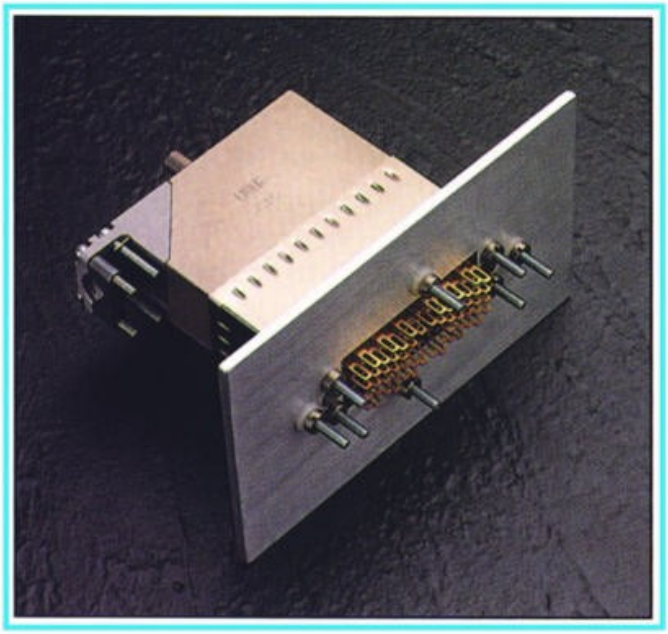

FEATURES

- UL Recognized
- .150 (3.81) Contact Spacing x .130 (3.30) or .150 (3.81) Row Spacing with Staggered Grid
- Plug and Receptacle in 20, 38, 56, 90 or 120 Contact Sizes
- Edacon Hermaphroditic Contact Mating Design
- Contact Termination Options include Crimp, P.C. Tail, Wire Hole, Wire Wrap and Tapet Tail
- Mating and Unmating Simplified with use of Actuating Screws
- Optional Covers with Cable Clamp Available Material for all Connector Sizes with Side or Top Cable Entry
- Versatile Cover Design permits Assembly or Dis-assembly After Cabling is Complete plus Cable Entry Style Flexibility
- Actuating Screws, Locknuts, Polarizing Hardware, Covers and Contacts Suitable for either Plug or Receptacle
- Polarizing Hardware Adjustable for 288 Mating Combinations
- Tools Available for Contact Installation, Removal and Crimping and Polarizing Changes
- EMI / RFI Shielding Hardware

SPECIFICATIONS

- Insulator Material: Diallyl Phthalate or Thermoplastic Polyester, UL 94V-0, Colour: Green, or Polycarbonate, Colour: Grey
- Contact Material: Phosphor Bronze Alloy CA-510
- Contact Plating: Gold over Nickel for Entire Contact
- Cover Material: Die-Cast Zinc
- Current Rating: 8.5 Amperes
- Contact Resistance: 10 Milliohms Maximum
- Dielectric Withstanding Voltage: 2000 V AC rms at Sea Level
- Insulation Resistance: 5000 Megohms Minimum
- Operating Temperature: -65 to +125 Degrees C
- Insertion and Withdrawal Force: 2 to 16 oz (0.56 to 4.45 N) per Contact Position
- Shielded Covers available with unpainted finish only

516 SERIES ORDERING CODE

Example Part Number 516 - 038 - 500 - B 2 1 2

- **Series** — 516
- **Total Number of Contacts** — 038
- **Contact Code** — 500
- **Style and Material** — B
- **Color Code** — 2
- **Cover Code** — 1
- **Hardware Code** — 2

Note: If no color code is indicated, standard colors will be supplied

Series 516

Total Number of Contacts
020, 038, 056, 090 or 120

Contact Code [1,2]	Description & Tail Size		Tail Length "G"	
000	No Contacts Assembled		—	—
500	Wire Hole	.110 x .024 (2.79 x 0.61)	.245	(6.22)
501	Taper Tail		.245	(6.22)
520	P.C. Tail	.025 x .024 (0.64 x 0.61)	.215	(5.46)
540	Wire Wrap	.050 x .024 (1.27 x 0.61)	.600	(15.24)
541	Wire Wrap	.026 x .024 (0.66 x 0.61)	.620	(15.75)
542	Wire Wrap	.050 x .024 (1.27 x 0.61)	.790	(20.07)

Style and Material [3]	Style	Insulator Material
1	Plug	Green Diallyl Phthalate
2	Receptacle	Green Diallyl Phthalate
3	Plug	Grey Polycarbonate
4	Receptacle	Grey Polycarbonate
5	Plug	Green Polyester
6	Receptacle	Green Polyester

Cover Code [4,5,6,7]	Description
7	Shielded Metal Cover, Side Entry
8	Shielded Metal Cover, Top Entry

Hardware Code [8]	Description
0	No Hardware Assembled
1	Actuating Screw and Polarizing Hardware
2	Locknut and Polarizing Hardware
5	Actuating Screw with No Polarizing Hardware
6	Locknut with No Polarizing Hardware

Ordering Code Notes

1) Crimp contacts are also available for the 516 series connectors. Contacts may be ordered separately for pre-wired or select position assembly.

Part Number	Description	Silhouette
516-290-500	Wire Hole	
516-290-501	Taper Tail	
516-290-520	P.C. Tail	
516-290-540	Wire Wrap	
516-290-541	Wire Wrap	
516-290-542	Wire Wrap	
516-290-590	Crimp - Loose	
516-290-591	Crimp - 1800 Contacts per reel	

Continued on next page

Downloaded from Elcodis.com electronic components distributor

STANDARD EDAC 516 SERIES PLUG OR RECEPTACLE CONNECTOR WITH BRAID GROUNDING CLAMP ASSEMBLY

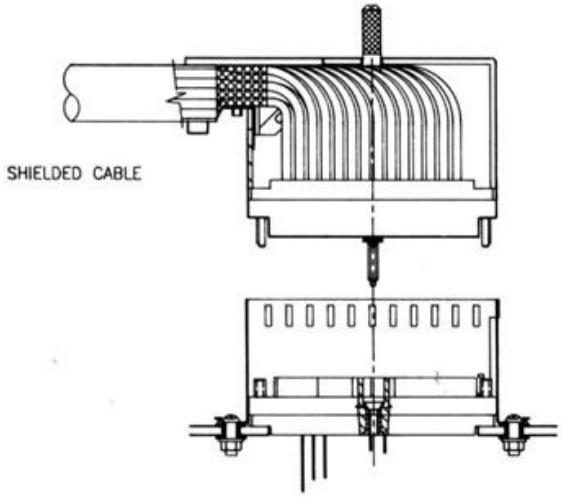

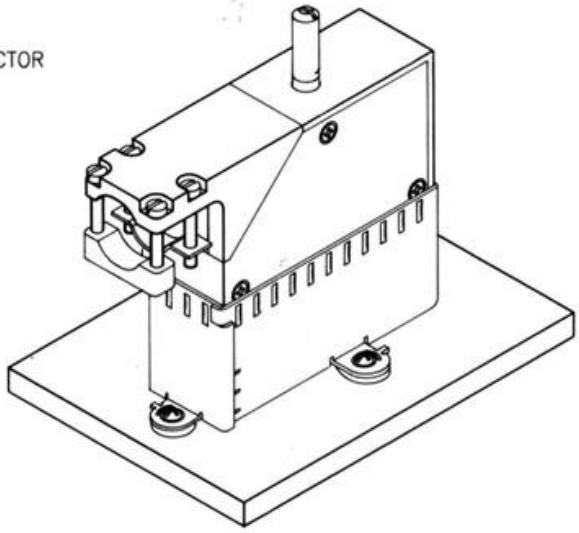

STANDARD EDAC 516 SERIES PLUG OR RECEPTACLE CONNECTOR WITH SHIELDING HARDWARE IN PLACE

PANEL CUT-OUT AND SHIELD MOUNTING HOLES
PANEL CUT AWAY TO CLEAR CONNECTOR

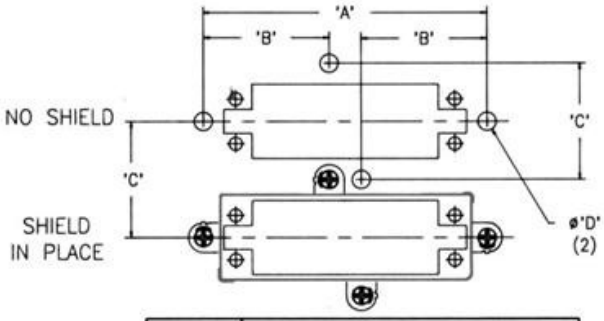

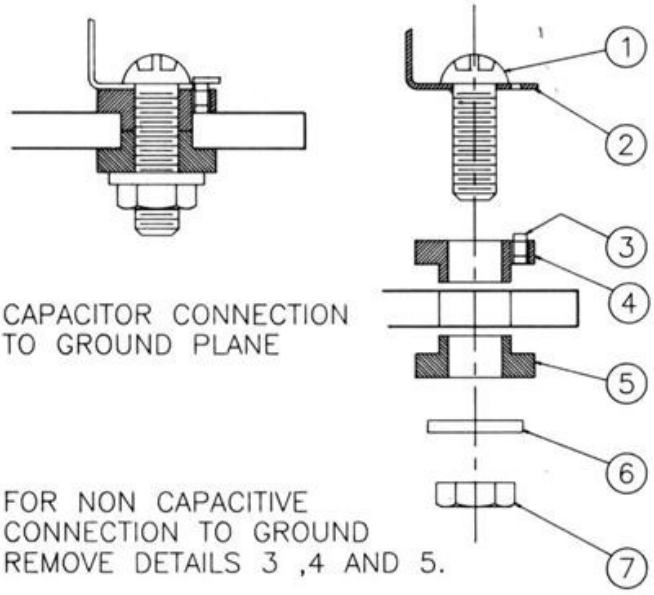

CAPACITOR CONNECTION TO GROUND PLANE

FOR NON CAPACITIVE CONNECTION TO GROUND REMOVE DETAILS 3 ,4 AND 5.

DETAIL No	DESCRIPTION
1	#4-40 P.H.C.S. X 3/4 LONG
2	PANEL SHIELD
3	SMD CAPACITOR
4	CAPACITOR RETAINER
5	INSULATING SPACER
6	#4- FLAT WASHER
7	#4-40 HEX NUT

NUMBER OF CONTACTS	"A"		"B"		"C"		"D"	
	inch	(mm)	inch	(mm)	inch	(mm)	inch	(mm)
20	1.679	(42.65)	.673	(17.09)	1.061	(26.95)	.190	(4.83)
38	2.360	(59.94)	1.014	(25.75)	1.220	(31.01)	.190	(4.83)
56	2.956	(75.08)	1.312	(33.52)	1.220	(31.01)	.190	(4.83)
90	3.072	(78.05)	1.370	(34.80)	1.580	(40.13)	.190	(4.83)
120	3.104	(78.84)	1.386	(35.20)	1.877	(47.68)	.190	(4.83)

Downloaded from Elcodis.com electronic components distributor

RACK AND PANEL CONNECTORS

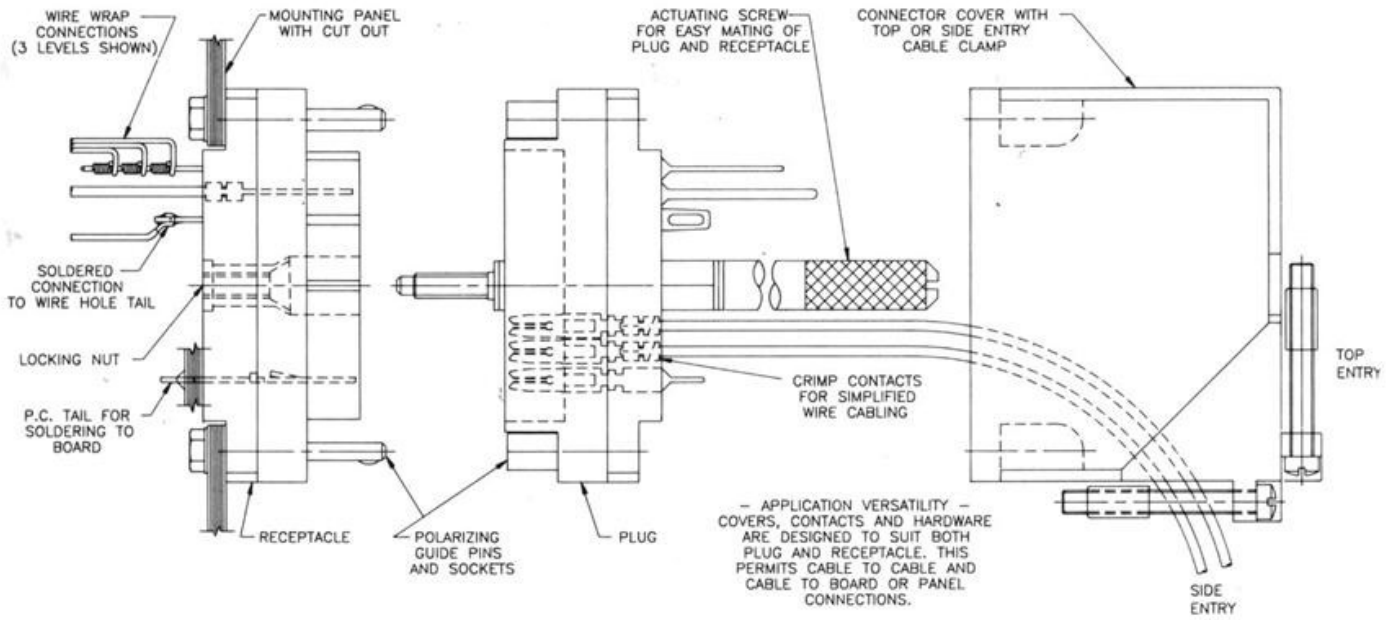

516 / 519 SERIES CONNECTOR
PANEL MOUNTING CUT–OUT

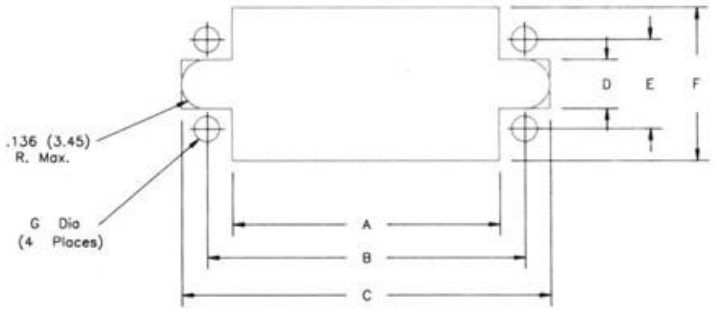

516 SERIES CONNECTOR CUT OUTS

CONNECTOR SIZE	A	B	C	D	E	F	G Dia
20 pin	.960 (24.38)	1.126 (28.6)	1.270 (32.26)	.260 (6.60)	.410 (10.41)	.640 (16.26)	.104 (2.64)
38 pin	1.420 (36.07)	1.688 (42.87)	1.958 (49.73)	.260 (6.60)	.468 (11.89)	.816 (20.73)	.136 (3.45)
56 pin	1.940 (49.28)	2.280 (57.91)	2.550 (64.77)	.260 (6.60)	.468 (11.89)	.816 (20.73)	.136 (3.45)
90 pin	2.050 (52.07)	2.282 (57.96)	2.675 (67.95)	.300 (7.62)	.765 (19.43)	1.120 (36.07)	.136 (3.45)
120 pin	2.050 (52.07)	2.375 (60.32)	2.675 (67.95)	.300 (7.62)	.875 (22.22)	1.420 (36.07)	.156 (3.96)

519 SERIES CONNECTOR CUT OUTS

CONNECTOR SIZE	A	B	C	D	E	F	G Dia
14 pin	.960 (24.38)	1.126 (28.6)	1.270 (32.26)	.260 (6.60)	.410 (10.41)	.640 (16.26)	.104 (2.64)
36 pin	1.420 (36.07)	1.688 (42.87)	1.958 (49.73)	.260 (6.60)	.468 (11.89)	.816 (20.73)	.136 (3.45)

Downloaded from Elcodis.com electronic components distributor

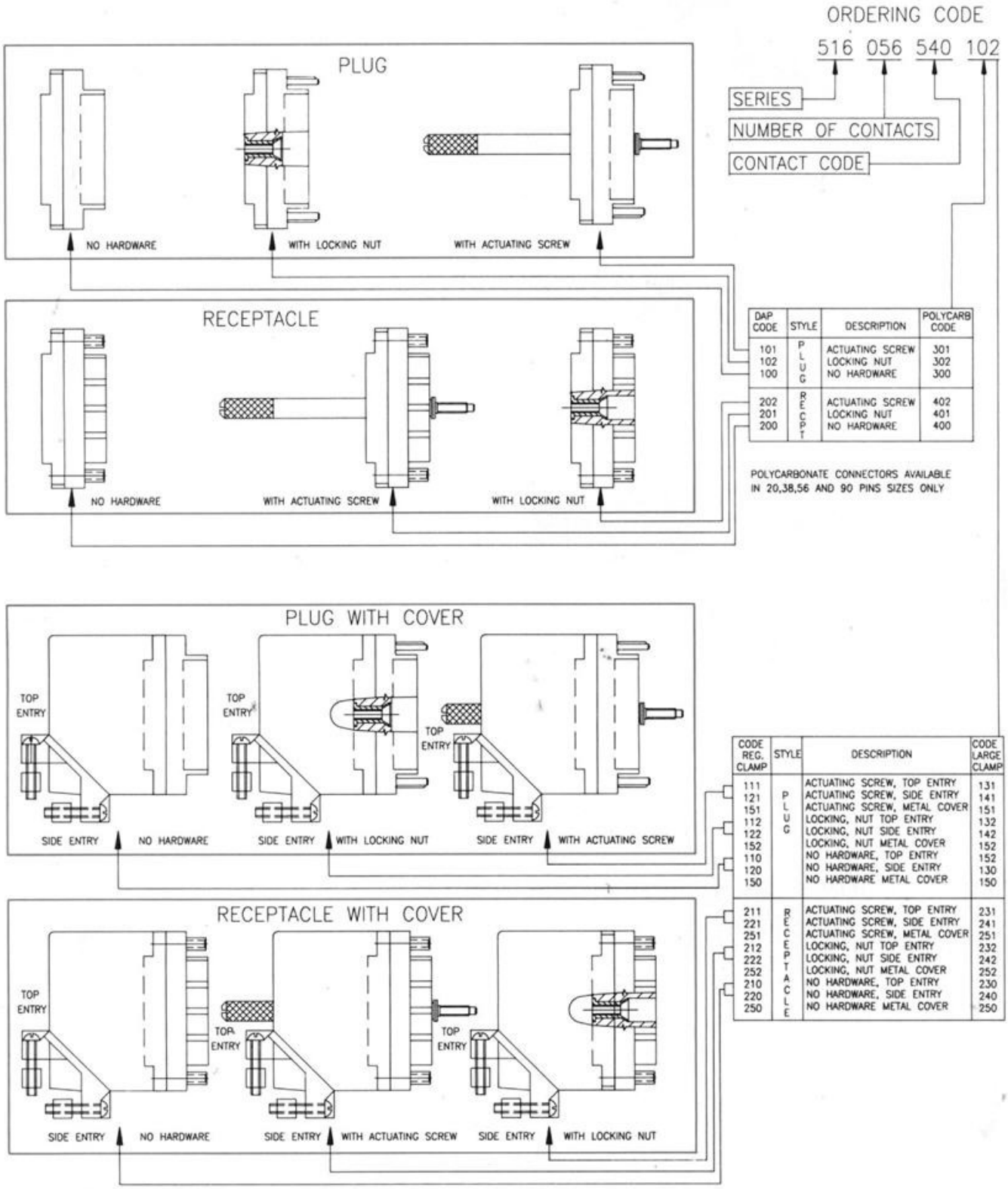

DAP CODE	STYLE	DESCRIPTION	POLYCARB CODE
101	PLUG	ACTUATING SCREW	301
102		LOCKING NUT	302
100		NO HARDWARE	300
202	RECPT	ACTUATING SCREW	402
201		LOCKING NUT	401
200		NO HARDWARE	400

POLYCARBONATE CONNECTORS AVAILABLE IN 20,38,56 AND 90 PINS SIZES ONLY

CODE REG. CLAMP	STYLE	DESCRIPTION	CODE LARGE CLAMP
111	PLUG	ACTUATING SCREW, TOP ENTRY	131
121		ACTUATING SCREW, SIDE ENTRY	141
151		ACTUATING SCREW, METAL COVER	151
112		LOCKING, NUT TOP ENTRY	132
122		LOCKING, NUT SIDE ENTRY	142
152		LOCKING, NUT METAL COVER	152
110		NO HARDWARE, TOP ENTRY	152
120		NO HARDWARE, SIDE ENTRY	130
150		NO HARDWARE METAL COVER	150
211	RECEPTACLE	ACTUATING SCREW, TOP ENTRY	231
221		ACTUATING SCREW, SIDE ENTRY	241
251		ACTUATING SCREW, METAL COVER	251
212		LOCKING, NUT TOP ENTRY	232
222		LOCKING, NUT SIDE ENTRY	242
252		LOCKING, NUT METAL COVER	252
210		NO HARDWARE, TOP ENTRY	230
220		NO HARDWARE, SIDE ENTRY	240
250		NO HARDWARE METAL COVER	250

Downloaded from Elcodis.com electronic components distributor

519 SERIES RACK & PANEL CONNECTOR

Plug and Recptacle

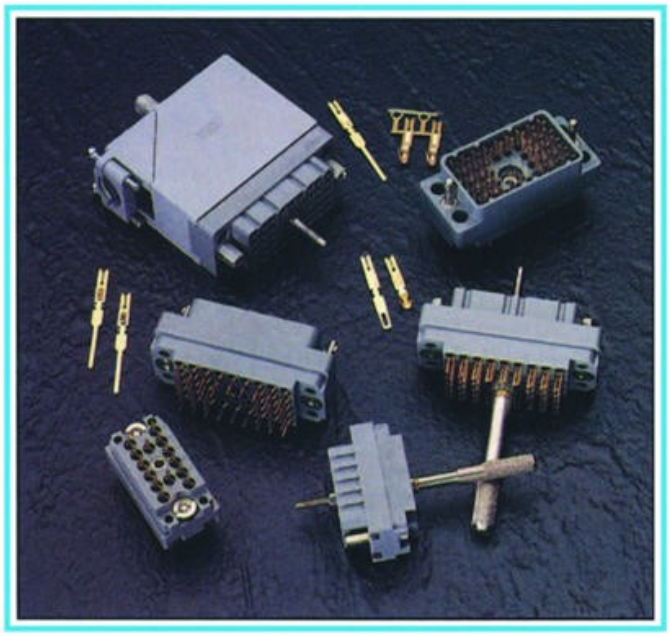

FEATURES

- .150 (3.81) Contact Spacing x .150 (3.81) Row Spacing Suitable For Automatic Wire Wrapping
- Plug and Receptacle in 14 or 36 Contact Sizes
- Edacon Hermaphroditic Contact Mating Design
- Contact Termination Options include Crimp, P.C. Tail, Wire Hole and Wire Wrap
- Mating and Unmating Simplified with use of Actuating Screws
- Optional Covers with Side or Top Entry Cable Clamp in Plastic or Metal Material Available for all Connector Sizes
- Versatile Metal Cover Design permits Assembly or Disassembly After Cabling is Complete plus Cable Entry Style Flexibility
- Actuating Screws, Locknuts, Polarizing Hardware, Covers and Contacts Suitable for either Plug or Receptacle
- Polarizing Hardware Adjustable for 288 Mating Combinations
- Tools Available for Contact Installation, Removal and Crimping and Polarizing Changes

SPECIFICATIONS

- Insulator Material: Polycarbonate, Colour: Grey
- Contact Material: Phosphor Bronze Alloy CA-510
- Contact Plating: Gold over Nickel for Entire Contact
- Cover Material: Polycarbonate, Colour: Green, or Die-Cast Zinc, Finished with Grey Enamel Paint
- For Additional Specifications, Crimp Characteristics and Polarizing Codes Refer to 516 Series

519 SERIES ORDERING CODE

Example Part Number 519 - 036 - 500 - 3 0 1

- **Series** — 519
- **Total Number of Contacts** — 036
- **Contact Code** — 500
- **Connector Style** — 3
- **Cover Code** — 0
- **Hardware Code** — 1

Series 519

Total Number of Contacts
014, 036

Contact Code
See 516 Series for Available Contact Options, "G" Dimension and Information Regarding Ordering Contacts Separately

Connector Style	Style
3	Plug
4	Receptacle

Cover Code [1,2,3,4]	Description
0	No Cover Assembled
1	Plastic Cover, Top Entry Standard Clamp
2	Plastic Cover, Side Entry Standard Clamp
3	Plastic Cover, Top Entry Large Clamp
4	Plastic Cover, Side Entry Large Clamp
5	Metal Cover, Side Entry
6	Metal Cover, Top Entry

Hardware Code [5]	Description
0	No Hardware Assembled
1	Actuating Screw and Polarizing Hardware
2	Locknut and Polarizing Hardware
5	Actuating Screw with No Polarizing Hardware
6	Locknut with No Polarizing Hardware

Ordering Code Notes

1) The 14 pin connector cover will not accept the length of the wire wrap contacts.
2) Plastic covers with large clamps are only available for the 36 pin size connectors.
3) Metal covers with side entry may be converted to top entry by removing side plate and changing clamp orientation.
4) Covers may be ordered separately. Refer to page 88.
5) Insulator design prevents improper mating of individual plug and receptacle. Polarizing hardware enables specific plug and receptacle mating combinations.

Downloaded from Elcodis.com electronic components distributor

CONNECTOR MATING FACE VIEWS

DIMENSIONS INDICATED FOR EACH SIZE APPLY TO BOTH PLUG AND RECEPTACLE

14 PIN PLUG

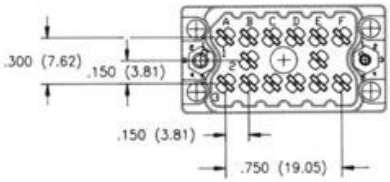

14 PIN RECEPTACLE

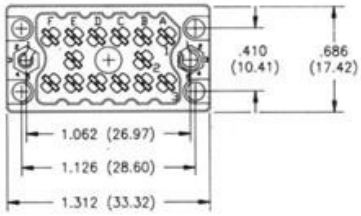

36 PIN PLUG

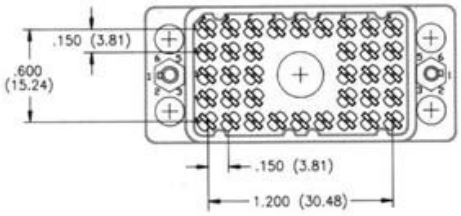

36 PIN RECEPTACLE

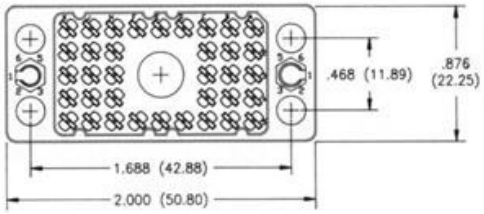

TYPICAL PLUG WITH ACTUATING SCREW AND POLARIZING GUIDE PINS

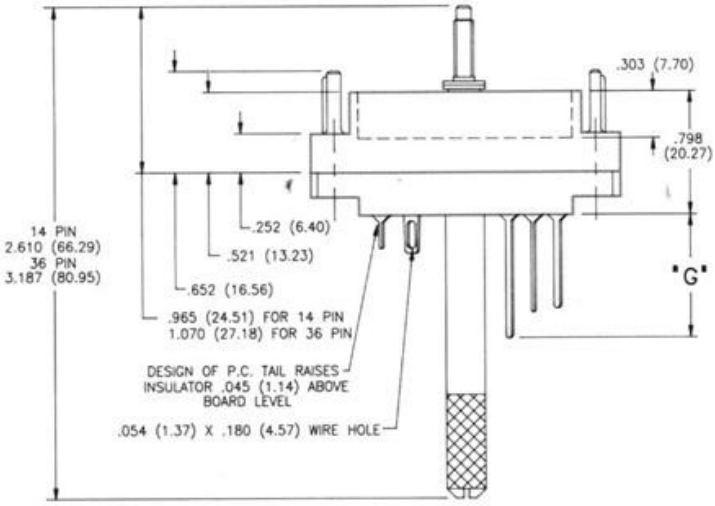

TYPICAL RECEPTACLE WITH LOCKNUT AND POLARIZING SOCKETS

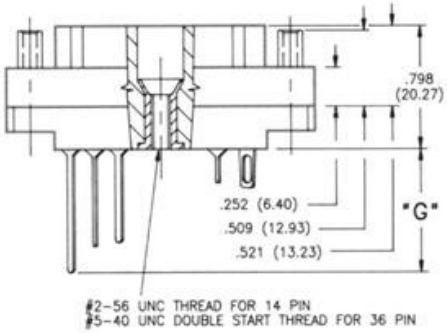

TYPICAL PLUG WITH ACTUATING SCREW, POLARIZING GUIDE PINS AND COVER

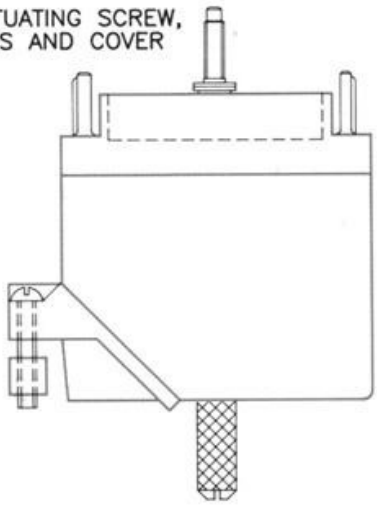

TYPICAL RECEPTACLE WITH LOCKNUT, POLARIZING SOCKETS AND COVER

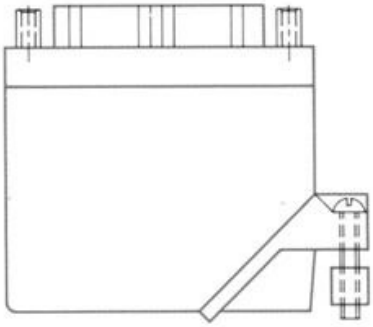

NOTE: PLASTIC POLARIZING GUIDE PINS AND SOCKETS (AVAILABLE SOON) WILL BE COLOUR CODED TO VISUALLY ASSIST CONNECTOR MATING. POLARIZATION CHANGES WILL ALSO BE SIMPLIFIED AS THEY SNAP FIRMLY INTO POSITION AND CAN BE REPLACED USING NEEDLENOSE PLIERS.

Downloaded from Elcodis.com electronic components distributor

556 SERIES EDACON CONNECTOR

Plug and Receptacle

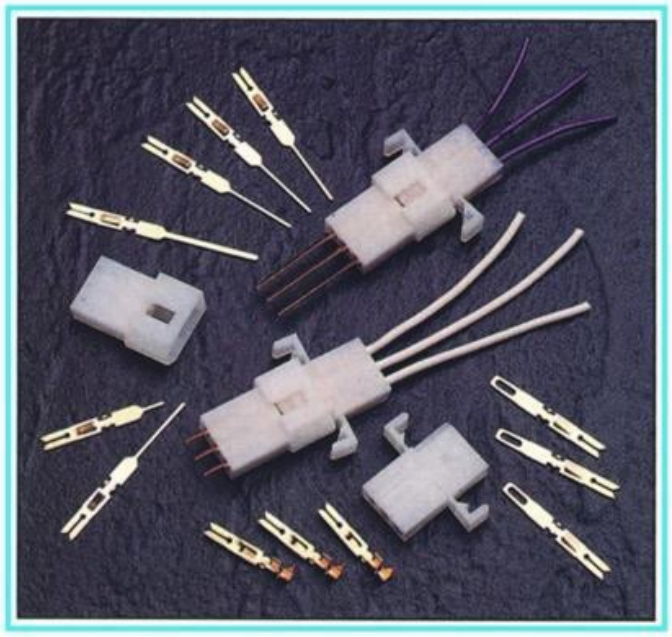

FEATURES

- UL Recognized
- .156 (3.96) Contact Spacing
- Plug and Receptacle in 3, 4, or 6 Contact Sizes
- Edacon Hermaphroditic Contact Mating Design
- Contact Termination Options include Crimp, P.C. Tail, Wire Hole, Wire Wrap and Taper Tail
- Tools Available for Contact Installation, Removal and Crimping

SPECIFICATIONS

- Circuit board substrate available in 94V-0
- Insulator Material: White Nylon
- Contact Material: Phosphor Bronze Alloy CA-510
- Contact Plating: Gold over Nickel for Entire Contact
- Current Rating: 8.5 Amperes
- Contact Resistance: 10 Milliohms Maximum
- Dielectric Withstanding Voltage: 2000 V AC rms at Sea Level
- Insulation Resistance: 5000 Megohms Minimum
- Operating Temperature: -65 to +105 Degrees C
- Insertion and Withdrawal Force: 2 to 16 oz (0.56 to 4.45 N) per Contact Position

556 SERIES ORDERING CODE

Example Part Number 556 - 003 - 500 - 102

- **Series** — 556
- **Total Number of Contacts** — 003
- **Contact Code** — 500
- **Style** — 102

Series 556

Total Number of Contacts
003

Contact Code [1,2]	Description & Tail Size	Tail Length "G"	
000	No Contacts Assembled	—	—
500	Wire Hole .110 x .024 (2.79 x 0.61)	.245	(6.22)
501	Taper Tail	.245	(6.22)
520	P.C. Tail .025 x .024 (0.64 x 0.61)	.215	(5.46)
540	Wire Wrap .050 x .024 (1.27 x 0.61)	.600	(15.24)
541	Wire Wrap .026 x .024 (0.66 x 0.61)	.620	(15.75)
542	Wire Wrap .050 x .024 (1.27 x 0.61)	.790	(20.07)

Style and Material [3]	Style
101	Plug
201	Receptacle
102	Plug with Panel Retention

Ordering Code Notes

1) Crimp contacts are also available for the 556 series connectors. Contacts may be ordered separately for pre-wired or select position assembly.

Part Number	Description	Silhouette
516-290-500	Wire Hole	
516-290-501	Taper Tail	
516-290-520	P.C. Tail	
516-290-540	Wire Wrap	
516-290-541	Wire Wrap	
516-290-542	Wire Wrap	
516-290-590	Crimp - Loose	
516-290-591	Crimp - 1800 Contacts per reel	

2) For contact installation, removal and crimping tools, refer to page 72.
3) Insulator design prevents improper mating of individual plug and receptacle.

Downloaded from Elcodis.com electronic components distributor

MALE CONNECTOR
(Hermaphroditic contacts)

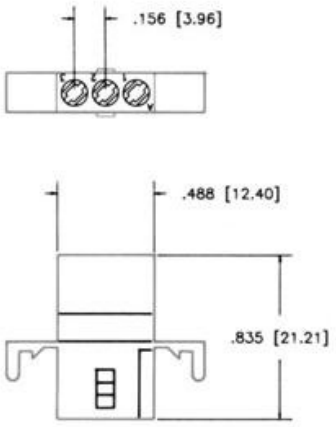

FEMALE CONNECTOR
(Hermaphroditic contacts)

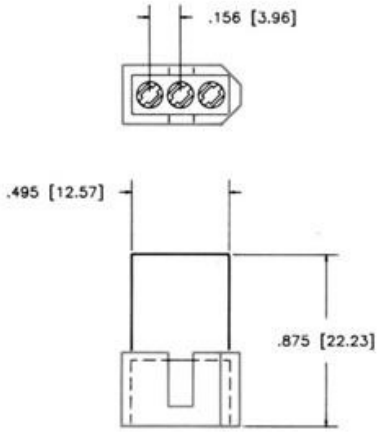

RECOMMENDED
PANEL OPENING
(If Desired)

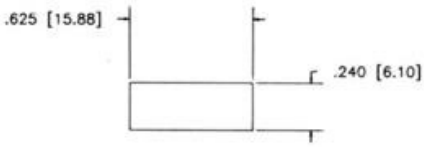

RECOMMENDED
BOARD LAYOUT

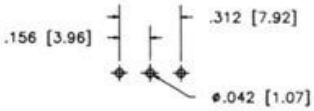

CONNECTOR MATING FACE VIEWS

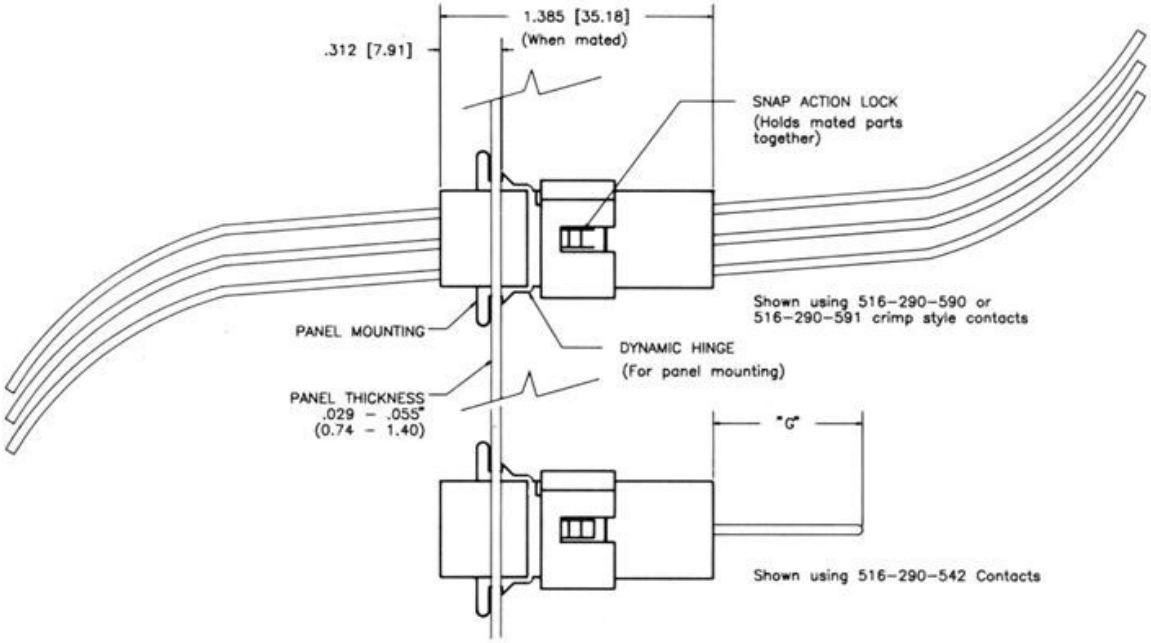

Downloaded from Elcodis.com electronic components distributor