**Soft Start Controllers**

**DS7 Soft Starter Controller**

**S611 Soft Starters**

**S811+ Soft Starters**

## 1.1 Solid-State Controllers


Product Overview . . . . . **V6-T1-2**
Type S701, Soft Start Controllers . . . . . **V6-T1-3**
Type S701, Soft Start Controllers with Auxiliary Contact . . . . . **V6-T1-9**
Type S701, Soft Start Controllers with Brake . . . . . **V6-T1-12**
Type S511, Semiconductor Reversing Contactors . . . . . **V6-T1-15**
DS7 Soft Start Controllers . . . . . **V6-T1-19**


## 1.2 Solid-State Starters


Product Overview . . . . . **V6-T1-42**
Type S611, Solid-State Soft Starters . . . . . **V6-T1-43**
Type S801+, Soft Starters . . . . . **V6-T1-60**
Type S811+, Soft Starters with DIM . . . . . **V6-T1-76**


Learn Online

Drawings Online

**Soft Start Controllers**

## Contents


| *Description* | *Page* |
|---|---|
| Soft Start Controllers | |
| Type S701, Soft Start Controllers | **V6-T1-3** |
| Type S701, Soft Start Controllers with Auxiliary Contact | **V6-T1-9** |
| Type S701, Soft Start Controllers with Brake | **V6-T1-12** |
| Type S511, Semiconductor Reversing Contactors | **V6-T1-15** |
| DS7 Soft Start Controllers | **V6-T1-19** |


## Product Overview

### Type S701

The S701 device is a reduced voltage soft start controller designed to control acceleration and deceleration of three-phase motors. The S701 provides the user with the ability to adjust initial torque, ramp up and down time, and also select kick start for high inertial loads.

### Type S701 with Auxiliary Contact

The S701 device is a reduced voltage soft start controller designed to control acceleration and deceleration of three-phase motors. With the auxiliary contact, it is possible to control an external bypass to reduce heating and increase acceleration and deceleration times.

The unit provides the user with the ability to adjust initial torque, ramp up and down time and also select kick start for high inertia loads.

### Type S701 with Brake

The S701 soft start controller with DC injection brake is designed to control acceleration and deceleration of three-phase motors. Brake current is adjustable from 0–50A DC. The ramp-up feature is adjustable from 0.5–10 seconds. Torque adjustment is adjustable with or without break loose (kick start) function.

### Semiconductor Reversing Contactor

The S511 device is a semiconductor reversing contactor designed to switch three-phase motors forward and reverse. Unicore electronics and thermal design ensures high switching capacity and long lifetime.

### DS7

Eaton's DS7 line of reduced voltage solid-state soft start controllers is very compact, multi-functional, easy to install, and easy to commission. Designed to control the acceleration and deceleration of three-phase motors, the device is available for current ranges from 4–32A in four frame sizes.

Type S701, Soft Start Controllers

## Contents


| *Description* | *Page* |
|---|---|
| Type S701, Soft Start Controllers | |
| Standards and Certifications | **V6-T1-4** |
| Catalog Number Selection | **V6-T1-4** |
| Product Selection | **V6-T1-4** |
| Technical Data and Specifications | **V6-T1-5** |
| Dimensions | **V6-T1-8** |
| Type S701, Soft Start Controllers with Auxiliary Contact | **V6-T1-9** |
| Type S701, Soft Start Controllers with Brake | **V6-T1-12** |
| Type S511, Semiconductor Reversing Contactors | **V6-T1-15** |
| DS7 Soft Start Controllers | **V6-T1-19** |


## Type S701, Soft Start Controllers

### Product Description

The S701 device is a reduced voltage soft start controller designed to control acceleration and deceleration of three-phase motors. The S701 provides the user with the ability to adjust initial torque, ramp up and down time, and also select kick start for high inertial loads.

### Application Description

The S701 line of soft start controllers is specifically designed to be a low cost option for soft starting small (15 hp and down) three-phase motors. The S701 unit controls current on two of three motor phases to control the torque being applied to the motor, allowing for smooth starting of a motor. The S701 is designed to be used with a manual motor starter or a full voltage starter. These devices provide the necessary overload protection for the motor and also provide line isolation for the motor. Short-circuit protection can be provided by fuses or circuit breakers.

### Features

- Rated operational voltage up to 600 Vac
- Control voltage range from 24–480 Vac/Vdc
- Adjustable ramp times (0.5–10 seconds)
- Adjustable initial torque control (0–85%)
- Kick start feature
- Soft stop (0.5–10 seconds)
- Unlimited number of START/STOP operations per hour
- IP20 finger protection
- Fractional to 15 hp motors at 480V (20 hp at 600V)

### Benefits

- Reduced wear on belts, gears, chains, clutches, shafts and bearings
- Allows for controlling the inrush current to the motor
- Reduced water-hammer in pumping applications
- Less shock to product on conveyor lines and material handling gear

## Standards and Certifications

- IEC 947 compliant
- EN 60947-4-2
- CE marked
- CSA certified
- UL listed (E108212)
- cUL listed

Listed Listed

## Catalog Number Selection

### S701 Soft Starters

**S701 C 15 N 3 S**

**Soft Start Controller**

**Line Voltage**
- **C** = 208–240 Vac
- **D** = 380–415 Vac
- **E** = 380–480 Vac
- **G** = 550–600 Vac

**Ampere Rating**
- **03** = 3.5A
- **15** = 15A
- **25** = 25A

**Options**
- **N** = No special options
- **B** = Braking

**Number of Poles**
- **3** = (Only three at this time)

**Control Options**
- **S** = Standard
- **BP** = Auxiliary contact

## Product Selection

**S701E15N3S**

**S701E25N3S**

### Soft Start Controllers

| Max. Current | Line Voltage | Control Voltage (Vac/Vdc) | Three-Phase Motor kW Rating (50 Hz) 230V | 380–400V | 440V | hp Rating (60 Hz) 200V 1.0 SF | 200V 1.15 SF | 230V 1.0 SF | 230V 1.15 SF | 460V 1.0 SF | 460V 1.15 SF | 575V 1.0 SF | 575V 1.15 SF | Catalog Number |
|---|---|---|---|---|---|---|---|---|---|---|---|---|---|---|
| 3.5 | 208–240 | 24–240 | 7.5 | N/A | N/A | 1 | 1 | 1 | 1 | N/A | N/A | N/A | N/A | **S701C03N3S** |
| 3.5 | 380–415 | 24–300 | N/A | 1.1 | N/A | N/A | N/A | N/A | N/A | 1-1/2 | 1-1/2 | N/A | N/A | **S701D03N3S** |
| 3.5 | 440–480 | 24–300 | N/A | N/A | 1.5 | N/A | N/A | N/A | N/A | 2 | 2 | N/A | N/A | **S701E03N3S** |
| 3.5 | 500–600 | 24–300 | N/A | N/A | N/A | N/A | N/A | N/A | N/A | N/A | N/A | 2 | 2 | **S701G03N3S** |
| 15 | 208–240 | 24–240 | 4 | N/A | N/A | 3 | 3 | 3 | 3 | N/A | N/A | N/A | N/A | **S701C15N3S** |
| 15 | 380–480 | 24–300 | N/A | 5.5 | 7.5 | N/A | N/A | N/A | N/A | 10 | 7-1/2 | N/A | N/A | **S701E15N3S** |
| 15 | 500–600 | 24–300 | N/A | N/A | N/A | N/A | N/A | N/A | N/A | N/A | N/A | 10 | 10 | **S701G15N3S** |
| 25 | 208–240 | 24–240 | 7.5 | N/A | N/A | 5 | 5 | 7-1/2 | 5 | N/A | N/A | N/A | N/A | **S701C25N3S** |
| 25 | 380–480 | 24–300 | N/A | 11 | 12.5 | N/A | N/A | N/A | N/A | 15 | 15 | N/A | N/A | **S701E25N3S** |
| 25 | 500–600 | 24–300 | N/A | N/A | N/A | N/A | N/A | N/A | N/A | N/A | N/A | 20 | 20 | **S701G25N3S** |

## Technical Data and Specifications

### Soft Starters—S701_03N3S

| Description | S701C03N3S | S701D03N3S | S701E03N3S | S701G03N3S |
|---|---|---|---|---|
| Maximum current capacity | 3.5 | 3.5 | 3.5 | 3.5 |
| Trip Class | | | | |
| 10A | 3.5 | 3.5 | 3.5 | 3.5 |
| 10 | 3.5 | 3.5 | 3.5 | 3.5 |
| 20 | 2.8 | 2.8 | 2.8 | 2.8 |
| 30 | 2.1 | 2.1 | 2.1 | 2.1 |
| **Electrical Characteristics** | | | | |
| Line voltage (Vac) | 208–240 | 380–415 | 440–480 | 500–600 |
| Operating frequency (Hz) | 50/60 | 50/60 | 50/60 | 50/60 |
| Leakage current | 5 mA AC max. | 5 mA AC max. | 5 mA AC max. | 5 mA AC max. |
| Minimum operational current | 50 mA | 50 mA | 50 mA | 50 mA |
| Control voltage (Vac/Vdc) | 24–240 | 24–300 | 24–300 | 24–300 |
| Pickup voltage max. | 20.4 Vac/Vdc | 20.4 Vac/Vdc | 20.4 Vac/Vdc | 20.4 Vac/Vdc |
| Dropout voltage min. | 5 Vac/Vdc | 5 Vac/Vdc | 5 Vac/Vdc | 5 Vac/Vdc |
| Max. control current for no operation | 1 mA | 1 mA | 1 mA | 1 mA |
| Response time max. | 70 ms | 70 ms | 70 ms | 70 ms |
| **Control Characteristics** | | | | |
| Ramp time (secs) | 0.5–10 | 0.5–10 | 0.5–10 | 0.5–10 |
| Ramp settings (% LRT) | 85% | 85% | 85% | 85% |
| Kick start settings (% LRT) | 85% | 85% | 85% | 85% |
| Soft stop (secs) | 0.5–10 | 0.5–10 | 0.5–10 | 0.5–10 |
| **Environment Characteristics** | | | | |
| Temperature–operating (no derating) | –30° to 40°C | –30° to 40°C | –30° to 40°C | –30° to 40°C |
| Current rating 50°C | N/A | N/A | N/A | N/A |
| Limited duty cycle 50°C | N/A | N/A | N/A | N/A |
| Current rating 60°C | N/A | N/A | N/A | N/A |
| Limited duty cycle 60°C | N/A | N/A | N/A | N/A |
| Temperature–storage | –30° to 80°C | –30° to 80°C | –30° to 80°C | –30° to 80°C |
| Altitude (meters)–no derating | 2000 | 2000 | 2000 | 2000 |
| Humidity | 95% noncondensing | 95% noncondensing | 95% noncondensing | 95% noncondensing |
| Operating position (no derating) | Vertical ±30° | Vertical ±30° | Vertical ±30° | Vertical ±30° |
| Impulse withstand voltage IEC 947-4-1 | 4000V | 4000V | 4000V | 4000V |
| Rated insulation voltage (Ui) | 660V | 660V | 660V | 660V |
| Installation category | III | III | III | III |
| Vibration | IEC 68-2-6 5g 10–150 Hz | IEC 68-2-6 5g 10–150 Hz | IEC 68-2-6 5g 10–150 Hz | IEC 68-2-6 5g 10–150 Hz |
| Power dissipation for intermittent operation | 4 W/A x duty cycle | 4 W/A x duty cycle | 4 W/A x duty cycle | 4 W/A x duty cycle |
| Power dissipation for continuous operation | 4 W/A x duty cycle | 4 W/A x duty cycle | 4 W/A x duty cycle | 4 W/A x duty cycle |
| Cooling method | Natural convection | Natural convection | Natural convection | Natural convection |
| Degree of protection | IP20 | IP20 | IP20 | IP20 |
| Pollution degree | 3 | 3 | 3 | 3 |
| Agency approvals | UL, cUL, CE | UL, cUL, CE | UL, cUL, CE | UL, cUL, CE |

## Soft Starters—S701_15N3S

| Description | S701C15N3S | S701E15N3S | S701G15N3S |
|---|---|---|---|
| Maximum current capacity | 15 | 15 | 15 |
| Trip Class | | | |
| 10A | 15 | 15 | 15 |
| 10 | 15 | 15 | 15 |
| 20 | 12 | 12 | 12 |
| 30 | 10 | 10 | 10 |
| **Electrical Characteristics** | | | |
| Line voltage (Vac) | 208–240 | 380–480 | 500–600 |
| Operating frequency (Hz) | 50/60 | 50/60 | 50/60 |
| Leakage current | 5 mA AC max. | 5 mA AC max. | 5 mA AC max. |
| Minimum operational current | 50 mA | 50 mA | 50 mA |
| Control voltage (Vac/Vdc) | 24–240 | 24–480 | 24–480 |
| Pickup voltage max. | 20.4 Vac/Vdc | 20.4 Vac/Vdc | 20.4 Vac/Vdc |
| Dropout voltage min. | 5 Vac/Vdc | 5 Vac/Vdc | 5 Vac/Vdc |
| Max. control current for no operation | 1 mA | 1 mA | 1 mA |
| Response time max. | 70 ms | 70 ms | 70 ms |
| **Control Characteristics** | | | |
| Ramp time (secs) | 0.5–10 | 0.5–10 | 0.5–10 |
| Ramp settings (% LRT) | 85% | 85% | 85% |
| Kick start settings (% LRT) | 85% | 85% | 85% |
| Soft stop (secs) | 0.5–10 | 0.5–10 | 0.5–10 |
| **Environment Characteristics** | | | |
| Temperature–operating (no derating) | –30° to 40°C | –30° to 40°C | –30° to 40°C |
| Current rating 50°C | 12.5A | 12.5A | 12.5A |
| Limited duty cycle 50°C | 15A on-time max.<br>15 min. duty cycle max. 0.8 | 15A on-time max.<br>15 min. duty cycle max. 0.8 | 15A on-time max.<br>15 min. duty cycle max. 0.8 |
| Current rating 60°C | 10A | 10A | 10A |
| Limited duty cycle 60°C | 15A on-time max.<br>15 min. duty cycle max. 0.65 | 15A on-time max.<br>15 min. duty cycle max. 0.65 | 15A on-time max.<br>15 min. duty cycle max. 0.65 |
| Temperature–storage | –30° to 80°C | –30° to 80°C | –30° to 80°C |
| Altitude (meters)–no derating | 2000 | 2000 | 2000 |
| Humidity | 95% noncondensing | 95% noncondensing | 95% noncondensing |
| Operating position (no derating) | Vertical ±30° | Vertical ±30° | Vertical ±30° |
| Impulse withstand voltage IEC 947-4-1 | 4000V | 4000V | 4000V |
| Rated insulation voltage (Ui) | 660V | 660V | 660V |
| Installation category | III | III | III |
| Vibration | IEC 68-2-6 5g 10–150 Hz | IEC 68-2-6 5g 10–150 Hz | IEC 68-2-6 5g 10–150 Hz |
| Power dissipation for intermittent operation | 2 W/A x duty cycle | 2 W/A x duty cycle | 2 W/A x duty cycle |
| Power dissipation for continuous operation | 2 W/A | 2 W/A | 2 W/A |
| Cooling method | Natural convection | Natural convection | Natural convection |
| Degree of protection | IP20 | IP20 | IP20 |
| Pollution degree | 3 | 3 | 3 |
| Agency approvals | UL, CSA, CE | UL, CSA, CE | UL, CSA, CE |

## Soft Starters—S701_25N3S

| Description | S701C25N3S | S701E25N3S | S701G25N3S |
|---|---|---|---|
| Maximum current capacity | 25 | 25 | 25 |
| Trip Class | | | |
| 10A | 25 | 25 | 25 |
| 10 | 25 | 25 | 25 |
| 20 | 20 | 20 | 20 |
| 30 | 15 | 15 | 15 |
| **Electrical Characteristics** | | | |
| Line voltage (Vac) | 208–240 | 380–480 | 500–600 |
| Operating frequency (Hz) | 50/60 | 50/60 | 50/60 |
| Leakage current | 5 mA AC max. | 5 mA AC max. | 5 mA AC max. |
| Minimum operational current | 50 mA | 50 mA | 50 mA |
| Control voltage (Vac/Vdc) | 24–240 | 24–300 | 24–300 |
| Pickup voltage max. | 20.4 Vac/Vdc | 20.4 Vac/Vdc | 20.4 Vac/Vdc |
| Dropout voltage min. | 5 Vac/Vdc | 5 Vac/Vdc | 5 Vac/Vdc |
| Max. control current for no operation | 1 mA | 1 mA | 1 mA |
| Response time max. | 70 ms | 70 ms | 70 ms |
| **Control Characteristics** | | | |
| Ramp time (secs) | 0.5–10 | 0.5–10 | 0.5–10 |
| Ramp settings (% LRT) | 85% | 85% | 85% |
| Kick start settings (% LRT) | 85% | 85% | 85% |
| Soft stop (secs) | 0.5–10 | 0.5–10 | 0.5–10 |
| **Environment Characteristics** | | | |
| Temperature–operating (no derating) | –30° to 40°C | –30° to 40°C | –30° to 40°C |
| Current rating 50°C | 20A | 20A | 20A |
| Limited duty cycle 50°C | 25A on-time max.<br>15 min. duty cycle max. 0.8 | 25A on-time max.<br>15 min. duty cycle max. 0.8 | 25A on-time max.<br>15 min. duty cycle max. 0.8 |
| Current rating 60°C | 17A | 17A | 17A |
| Limited duty cycle 60°C | 25A on-time max.<br>15 min. duty cycle max. 0.65 | 25A on-time max.<br>15 min. duty cycle max. 0.65 | 25A on-time max.<br>15 min. duty cycle max. 0.65 |
| Temperature–storage | –30° to 80°C | –30° to 80°C | –30° to 80°C |
| Altitude (meters)–no derating | 2000 | 2000 | 2000 |
| Humidity | 95% noncondensing | 95% noncondensing | 95% noncondensing |
| Operating position (no derating) | Vertical ±30° | Vertical ±30° | Vertical ±30° |
| Impulse withstand voltage IEC 947-4-1 | 4000V | 4000V | 4000V |
| Rated insulation voltage (Ui) | 660V | 660V | 660V |
| Installation category | III | III | III |
| Vibration | IEC 68-2-6 5g 10–150 Hz | IEC 68-2-6 5g 10–150 Hz | IEC 68-2-6 5g 10–150 Hz |
| Power dissipation for intermittent operation | 2 W/A x duty cycle | 2 W/A x duty cycle | 2 W/A x duty cycle |
| Power dissipation for continuous operation | 2 W/A | 2 W/A | 2 W/A |
| Cooling method | Natural convection | Natural convection | Natural convection |
| Degree of protection | IP20 | IP20 | IP20 |
| Pollution degree | 3 | 3 | 3 |
| Agency approvals | UL, CSA, CE | UL, CSA, CE | UL, CSA, CE |

1

## Dimensions

Approximate Dimensions in Inches (mm)

### Soft Starters—S701...N3S

| Catalog Number | W | H | D | Weight in Lbs (kg) |
|---|---|---|---|---|
| **S701C03N3S** | 0.89 (22.5) | 3.94 (100) | 5.01 (127) | 0.6 (270) |
| **S701D03N3S** | 0.89 (22.5) | 3.94 (100) | 5.01 (127) | 0.6 (270) |
| **S701E03N3S** | 0.89 (22.5) | 3.94 (100) | 5.01 (127) | 0.6 (270) |
| **S701G03N3S** | 0.89 (22.5) | 3.94 (100) | 5.01 (127) | 0.6 (270) |
| **S701C15N3S** | 1.77 (45) | 3.94 (100) | 5.04 (128) | 1.52 (690) |
| **S701E15N3S** | 1.77 (45) | 3.94 (100) | 5.04 (128) | 1.52 (690) |
| **S701G15N3S** | 1.77 (45) | 3.94 (100) | 5.04 (128) | 1.52 (690) |
| **S701C25N3S** | 3.54 (90) | 3.94 (100) | 5.04 (128) | 2.53 (1150) |
| **S701E25N3S** | 3.54 (90) | 3.94 (100) | 5.04 (128) | 2.53 (1150) |
| **S701G25N3S** | 3.54 (90) | 3.94 (100) | 5.04 (128. | 2.53 (1150) |

Type S701, Soft Start Controllers with Auxiliary Contact

## Contents


| *Description* | *Page* |
|---|---|
| Type S701, Soft Start Controllers | **V6-T1-3** |
| Type S701, Soft Start Controllers with Auxiliary Contact | |
| Product Selection | **V6-T1-10** |
| Technical Data and Specifications | **V6-T1-10** |
| Dimensions | **V6-T1-11** |
| Type S701, Soft Start Controllers with Brake | **V6-T1-12** |
| Type S511, Semiconductor Reversing Contactors | **V6-T1-15** |
| DS7 Soft Start Controllers | **V6-T1-19** |


# Type S701, Soft Start Controllers with Auxiliary Contact

## Product Description

The S701 device is a reduced voltage soft start controller designed to control acceleration and deceleration of three-phase motors. With the auxiliary contact, it is possible to control an external bypass to reduce heating and increase acceleration and deceleration times.

The unit provides the user with the ability to adjust initial torque, ramp up and down time and also select kick start for high inertia loads.

## Application Description

The S701 line of soft start controllers is specifically designed to be a low cost option for soft starting small (15 hp and down) three-phase motors. The auxiliary contact is designed to work in conjunction with an across-the-line contactor. The purpose of the contactor is to provide a parallel current path once the soft starter has brought the motor up to speed. Once the soft start controller reaches end of ramp, the auxiliary contact will close and send a signal to close the bypass contactor, thus providing a low impedance path for the current to the motor. The S701 unit controls current on two of three motor phases to control the torque being applied to the motor, allowing for smooth starting of a motor. The S701 is designed to be used with a manual motor protector or a full voltage starter. These devices provide the necessary overload protection for the motor and also provide line isolation for the motor. Short-circuit protection can be provided by fuses or circuit breakers.

## Features

- Rated operational voltage up to 600 Vac
- Control voltage range from 24–300 Vac/Vdc
- Adjustable ramp times (0.5–20 seconds)
- Adjustable initial torque control (0–85%)
- Kick start feature (0–85% adjustment)
- Kick start for 200 ms
- Soft stop (0.5–20 seconds)
- IP20 finger protection
- Available up to 30A (with Bypass installed)
- Auxiliary contact for up-to-speed indication

## Benefits

- Reduced wear on belts, gears, chains, clutches, shafts and bearings
- Bypass option allows for greater current capacity in the unit
- Bypass option helps to reduce heat in the enclosure
- Allows for controlling the inrush current to the motor
- Reduced water-hammer in pumping applications
- Less shock to product on conveyor lines and material handling gear

## Standards and Certifications

- IEC 947 compliant
- EN 60947-4-2
- CE marked
- UL listed (E108212)
- cUL listed

Listed Listed

1

## Product Selection

For S701 catalog number selection, see **Page V6-T1-4**.

**S701**

### Soft Start Controllers with Auxiliary Contact

| Max. Current | Line Voltage | Control Voltage (Vac/Vdc) | Three-Phase Motor kW Rating (50 Hz) 230V | 380–400V | 440V | hp Rating 200V 1.0 SF | 1.15 SF | 230V 1.0 SF | 1.15 SF | 460V 1.0 SF | 1.15 SF | 575V 1.0 SF | 1.15 SF | Catalog Number |
|---|---|---|---|---|---|---|---|---|---|---|---|---|---|---|
| **Ratings without Bypass** | | | | | | | | | | | | | | |
| 25 | 208–240 | 24–240 | 5.5 | N/A | N/A | 5 | 5 | 7-1/2 | 5 | N/A | N/A | N/A | N/A | **S701C25N3BP** |
| 25 | 380–480 | 24–300 | N/A | 12.5 | 12.5 | N/A | N/A | N/A | N/A | 15 | 15 | N/A | N/A | **S701E25N3BP** |
| 25 | 500–600 | 24–300 | N/A | N/A | N/A | N/A | N/A | N/A | N/A | N/A | N/A | 20 | 20 | **S701G25N3BP** |
| **Ratings with Bypass** | | | | | | | | | | | | | | |
| 30 | 208–240 | 24–240 | 7.5 | N/A | N/A | 7-1/2 | 7-1/2 | 10 | 7-1/2 | N/A | N/A | N/A | N/A | **S701C25N3BP** |
| 30 | 380–480 | 24–300 | N/A | 15 | 15 | N/A | N/A | N/A | N/A | 20 | 15 | N/A | N/A | **S701E25N3BP** |
| 30 | 500–600 | 24–300 | N/A | N/A | N/A | N/A | N/A | N/A | N/A | N/A | N/A | 25 | 20 | **S701G25N3BP** |

## Technical Data and Specifications

### Soft Starters with Auxiliary Contact—S701_25N3BP

| Description | S701C25N3BP | S701E25N3BP | S701G25N3BP |
|---|---|---|---|
| Maximum current capacity with bypass (without bypass) | 30 (25) | 30 (25) | 30 (25) |
| Trip Class | | | |
| 10A | 30 (25) | 30 (25) | 30 (25) |
| 10 | 30 (25) | 30 (25) | 30 (25) |
| 20 | 24 (20) | 24 (20) | 24 (20) |
| 30 | 19.5 (15) | 19.5 (15) | 19.5 (15) |
| **Electrical Characteristics** | | | |
| Line voltage (Vac) | 208–240 | 380–480 | 500–600 |
| Operating frequency (Hz) | 50/60 | 50/60 | 50/60 |
| Leakage current | 5 mA AC max. | 5 mA AC max. | 5 mA AC max. |
| Minimum operational current | 50 mA | 50 mA | 50 mA |
| Control voltage (Vac/Vdc) | 24–240 | 24–300 | 24–300 |
| Pickup voltage max. | 20.4 Vac/Vdc | 20.4 Vac/Vdc | 20.4 Vac/Vdc |
| Dropout voltage min. | 5 Vac/Vdc | 5 Vac/Vdc | 5 Vac/Vdc |
| Max. control current for no operation | 1 mA | 1 mA | 1 mA |
| Response time max. | 70 ms | 70 ms | 70 ms |

### Soft Starters with Auxiliary Contact—S701_25N3BP, continued

| Description | S701C25N3BP | S701E25N3BP | S701G25N3BP |
|---|---|---|---|
| **Control Characteristics** | | | |
| Ramp time (secs) | 0.5–20 | 0.5–20 | 0.5–20 |
| Ramp settings (% LRT) | 85% | 85% | 85% |
| Kick start settings (% LRT) | 85% | 85% | 85% |
| Soft stop (secs) | 0.5–20 | 0.5–20 | 0.5–20 |
| **Environmental Characteristics** | | | |
| Temperature—operating (no derating) | –30° to 40°C | –30° to 40°C | –30° to 40°C |
| Current rating 50°C | 20A | 20A | 20A |
| Limited duty cycle 50°C | 25A on-time max.<br>15 min. duty cycle max. 0.8 | 25A on-time max.<br>15 min. duty cycle max. 0.8 | 25A on-time max.<br>15 min. duty cycle max. 0.8 |
| Current rating 60°C | 17A | 17A | 17A |
| Limited duty cycle 60°C | 25A on-time max.<br>15 min. duty cycle max. 0.65 | 25A on-time max.<br>15 min. duty cycle max. 0.65 | 25A on-time max.<br>15 min. duty cycle max. 0.65 |
| Temperature—storage | –30° to 80°C | –30° to 80°C | –30° to 80°C |
| Altitude (meters)—no derating | 2000 | 2000 | 2000 |
| Humidity | 95% noncondensing | 95% noncondensing | 95% noncondensing |
| Operating position (no derating) | Vertical ±30° | Vertical ±30° | Vertical ±30° |
| Impulse withstand voltage IEC 947-4-1 | 4000V | 4000V | 4000V |
| Rated insulation voltage (Ui) | 660V | 660V | 660V |
| Installation category | III | III | III |
| Vibration | IEC 68-2-6 5g 10–150 Hz | IEC 68-2-6 5g 10–150 Hz | IEC 68-2-6 5g 10–150 Hz |
| Power dissipation for continuous operation | 2 W/A without bypass | 2 W/A without bypass | 2 W/A without bypass |
| Power dissipation with semiconductor bypassed | 5 W/A max. with bypass | 5 W/A max. with bypass | 5 W/A max. with bypass |
| Cooling method | Natural convection | Natural convection | Natural convection |
| Degree of protection | IP20 | IP20 | IP20 |
| Pollution degree | 3 | 3 | 3 |
| Agency approvals | UL, cUL, CE | UL, cUL, CE | UL, cUL, CE |

## Dimensions

Approximate Dimensions in Inches (mm)

### Soft Starters with Auxiliary Contact—S701_25N3BP

| Catalog Number | W | H | D | Weight in Lbs (kg) |
|---|---|---|---|---|
| **S701C25N3BP** | 3.54 (89.9) | 3.94 (100.1) | 5.04 (128.0) | 2.53 (1150) |
| **S701E25N3BP** | 3.54 (89.9) | 3.94 (100.1) | 5.04 (128.0) | 2.53 (1150) |
| **S701G25N3BP** | 3.54 (89.9) | 3.94 (100.1) | 5.04 (128.0) | 2.53 (1150) |

**Type S701, Soft Start Controllers with Brake**

## Contents


| *Description* | *Page* |
|---|---|
| Type S701, Soft Start Controllers | **V6-T1-3** |
| Type S701, Soft Start Controllers with Auxiliary Contact | **V6-T1-9** |
| Type S701, Soft Start Controllers with Brake | |
| Product Selection | **V6-T1-13** |
| Technical Data and Specifications | **V6-T1-13** |
| Dimensions | **V6-T1-14** |
| Type S511, Semiconductor Reversing Contactors | **V6-T1-15** |
| DS7 Soft Start Controllers | **V6-T1-19** |


## Type S701, Soft Start Controllers with Brake

### Product Description

The S701 soft start controller with DC injection brake is designed to control acceleration and deceleration of three-phase motors. Brake current is adjustable from 0–50A DC. The ramp-up feature is adjustable from 0.5–10 seconds. Torque adjustment is adjustable with or without break loose (kick start) function.

### Application Description

The S701 line of soft start controllers is specifically designed to be a low cost option for soft starting small (15 hp and down) three-phase motors. The braking option is a DC injection system, allowing for fast stopping of a three-phase motor. The S701 unit controls current on two of the three phases to control the torque being applied to the motor, allowing for smooth starting of a motor. The S701 is designed to be used with a manual motor starter or a full voltage starter. These devices provide the necessary overload protection for the motor and also provide line isolation for the motor. Short-circuit protection can be provided by fuses or circuit breakers.

### Features

- Rated operational voltage up to 480 Vac
- Control voltage range from 24–300 Vac/Vdc
- Adjustable ramp times (0.5–20 seconds)
- Adjustable initial torque control (0–85%)
- Kick start feature (0–85% adjustment)
- Kick start for 200 ms
- IP20 finger protection
- Braking control adjustable from 0–50A DC
- Slow speed: 7.5% or 10% of nominal speed

### Benefits

- Reduced wear on bolts, gears, chains, clutches, shafts and bearings
- Braking option allows for quick stopping of loads
- Brake control can help eliminate expensive mechanical brakes
- Allows for controlling the inrush current to the motor
- Reduced water-hammer in pumping applications
- Less shock to product on conveyor lines and material handling gear

### Standards and Certifications

- IEC 947 compliant
- EN 60947-4-2
- CE marked
- UL listed (E108212)
- cUL listed

Listed Listed

## Product Selection

For S701 catalog number selection, see **Page V6-T1-4**.

**S701E25B3S**

### Soft Start Controllers with Brake

| Max. Current | Line Voltage | Control Voltage (Vac/Vdc) | Three-Phase Motor kW Rating (50 Hz) 230V | 380–400V | 440V | hp Rating 200V 1.0 SF | 1.15 SF | 230V 1.0 SF | 1.15 SF | 460V 1.0 SF | 1.15 SF | Catalog Number |
|---|---|---|---|---|---|---|---|---|---|---|---|---|
| 25 | 208–240 | 24–240 | 5.5 | N/A | N/A | 5 | 5 | 7-1/2 | 5 | N/A | N/A | **S701C25B3S** |
| 25 | 380–480 | 24–300 | N/A | 12.5 | 12.5 | N/A | N/A | N/A | N/A | 15 | 15 | **S701E25B3S** |

## Technical Data and Specifications

### Soft Starters with Brake—S701_25B3S

| Description | S701C25B3S | S701E25B3S |
|---|---|---|
| Maximum current capacity | 25 | 25 |
| Trip Class | | |
| 10A | 25 | 25 |
| 10 | 25 | 25 |
| 20 | 20 | 20 |
| 30 | 15 | 15 |
| **Electrical Characteristics** | | |
| Line voltage (Vac) | 208–240 | 380–480 |
| Operating frequency (Hz) | 50/60 | 50/60 |
| Leakage current | 5 mA AC max. | 5 mA AC max. |
| Minimum operational current | 1A | 1A |
| Control voltage (Vac/Vdc) | 24–240 | 24–300 |
| Pickup voltage max. | 20.4 Vac/Vdc | 20.4 Vac/Vdc |
| Dropout voltage min. | 5 Vac/Vdc | 5 Vac/Vdc |
| Max. control current for no operation | 1 mA | 1 mA |
| Response time max. | 100 ms | 100 ms |
| **Control Characteristics** | | |
| Ramp time (secs) | 0.5–10 | 0.5–10 |
| Ramp settings (% LRT) | 85% | 85% |
| Kick start settings (% LRT) | 85% | 85% |
| Soft stop (secs) | 0.5–10 | 0.5–10 |
| Brake current | 0–50 Vdc | 0–50 Vdc |

## Soft Starters with Brake—S701_25B3S, continued

| Description | S701C25B3S | S701E25B3S |
|---|---|---|
| **Environmental Characteristics** | | |
| Temperature—operating | –30° to 40°C | –30° to 40°C |
| Current rating 50°C | 20A | 20A |
| Limited duty cycle 50°C | 25A on-time max.<br>15 min. duty cycle max. 0.8 | 25A on-time max.<br>15 min. duty cycle max. 0.8 |
| Current rating 60°C | 17A | 17A |
| Limited duty cycle 60°C | 25A on-time max.<br>15 min. duty cycle max. 0.65 | 25A on-time max.<br>15 min. duty cycle max. 0.65 |
| Temperature—storage | –30° to 80°C | –30° to 80°C |
| Altitude (meters)—no derating | 2000 | 2000 |
| Humidity | 95% noncondensing | 95% noncondensing |
| Operating position | Vertical ± 0° | Vertical ± 0° |
| Impulse withstand voltage IEC 947-4-1 | 4000V | 4000V |
| Rated insulation voltage (Ui) | 660V | 660V |
| Installation category | III | III |
| Vibration | IEC 68-2-6 5g 10–150 Hz | IEC 68-2-6 5g 10–150 Hz |
| Power dissipation for intermittent operation | 2 W/A x duty cycle | 2 W/A x duty cycle |
| Power dissipation for continuous operation | 2 W/A | 2 W/A |
| Cooling method | Natural convection | Natural convection |
| Degree of protection | IP20 | IP20 |
| Pollution degree | 3 | 3 |
| Agency approvals | UL, cUL, CE | UL, cUL, CE |

## Dimensions

Approximate Dimensions in Inches (mm)

### Soft Starters with Brake—S701_25B3S

| Catalog Number | W | H | D | Weight in Lbs (kg) |
|---|---|---|---|---|
| **S701C25B3S** | 3.54 (89.9) | 3.94 (100.1) | 5.04 (128.0) | 2.53 (1150) |
| **S701E25B3S** | 3.54 (89.9) | 3.94 (100.1) | 5.04 (128.0) | 2.53 (1150) |

## Contents

| *Description* | *Page* |
|---|---|
| Type S701, Soft Start Controllers | **V6-T1-3** |
| Type S701, Soft Start Controllers with Auxiliary Contact | **V6-T1-9** |
| Type S701, Soft Start Controllers with Brake | **V6-T1-12** |
| Type S511, Semiconductor Reversing Contactors | |
| Product Selection | **V6-T1-16** |
| Technical Data and Specifications | **V6-T1-16** |
| Dimensions | **V6-T1-17** |
| DS7 Soft Start Controllers | **V6-T1-19** |

## Type S511, Semiconductor Reversing Contactors

### Product Description

The S511 device is a semiconductor reversing contactor designed to switch three-phase motors forward and reverse. Unicore electronics and thermal design ensures high switching capacity and long lifetime.

### Application Description

The S511 line of solid-state reversing contactors is specifically designed for high speed operations or when long contactor life is required. The reversing contactors are intended for small motor applications (5 hp and below). The S511 unit can be used in a variety of applications including fans, pumps, conveyors, doors, hoists, cranes, etc. It is designed to be used with a manual motor starter or a full voltage starter. These devices provide the necessary overload protection for the motor and also provide line isolation for the motor. Short-circuit protection can be provided by fuses or circuit breakers.

### Features

- Rated operational voltage up to 480 Vac
- Control voltage ranges of 5–24 Vdc and 24–240 Vac/Vdc
- Unlimited number of START/STOP operations per hour
- IP20 finger protection
- AC-3 current rating of 10A
- AC-4 current rating of 8A

### Benefits

- Extremely high switching rates possible
- Very long life expectancy and no contacts or movable parts to replace
- Compact design (45 mm wide) leads to significant panel savings

### Standards and Certifications

- IEC 947 compliant
- EN 60947-4-2
- CE marked
- CSA certified
- UL listed

Listed

1

## Product Selection

### Reversing Solid-State Contactors

| Max. Current | Line Voltage | Control Voltage | Three-Phase Motor kW Rating (50 Hz) 230V | 380–400V | 440V | hp Rating 200V 1.0 SF | 1.15 SF | 230V 1.0 SF | 1.15 SF | 460V 1.0 SF | 1.15 SF | Catalog Number |
|---|---|---|---|---|---|---|---|---|---|---|---|---|
| 10 | 208–480 | 5–24 Vdc | 2.2 | 4 | 4 | 2 | 2 | 3 | 2 | 5 | 5 | **S511E10N3D** |
| 10 | 208–480 | 24–240 Vac/Vdc | 2.2 | 4 | 4 | 2 | 2 | 3 | 2 | 5 | 5 | **S511E10N3S** |

## Technical Data and Specifications

### Semiconductor Reversing Contactors—S511E10N3_

| Description | S511E10N3D | S511E10N3S |
|---|---|---|
| Maximum current capacity | 10 | 10 |
| Trip Class | | |
| 10A | 10 | 10 |
| 10 | 10 | 10 |
| 20 | 8 | 8 |
| 30 | 6.5 | 6.5 |
| **Electrical Characteristics** | | |
| Line Voltage (Vac) | 208–480 | 208–480 |
| Operating frequency (Hz) | 50/60 | 50/60 |
| Control voltage | 5–24 Vdc | 24–240 Vac/Vdc |
| Pickup voltage max. | 4.25 Vdc | 20.4 Vac/Vdc |
| Dropout voltage min. | 1.5 Vdc | 7.2 Vac/Vdc |
| Max. control voltage | 26.4 Vdc | 253 Vac/Vdc |
| Response time max. | 1/2 cycle | 1 cycle |
| Interlock time max. | 80 ms | 150 ms |
| **Control Characteristics** | | |
| Operation current AC-3 | 10 | 10 |
| Operation current AC-4 | 8 | 8 |
| Duty cycle | Continuous operation | Continuous operation |
| Leakage current | 1 mA AC max. | 1 mA AC max. |
| Minimum operation current | 10 mA AC | 10 mA AC |
| **Environmental Characteristics** | | |
| Temperature—operating | 0° to 60°C | 0° to 60°C |
| Temperature—storage | –20° to 80°C | –20° to 80°C |
| Altitude (meters) | 2000 | 2000 |
| Humidity | 95% noncondensing | 95% noncondensing |
| Operating position | Vertical ±30° | Vertical ±30° |
| Impulse withstand voltage IEC 947-4-1 | 4000V | 4000V |
| Rated insulation voltage (Ui) | 660V | 660V |
| Installation category | III | III |
| Vibration | IEC 68-2-6 5g 10–150 Hz | IEC 68-2-6 5g 10–150 Hz |
| Power dissipation for intermittent operation | 2.2 W/A x duty cycle | 2.2 W/A x duty cycle |
| Power dissipation for continuous operation | 2.2 W/A | 2.2 W/A |
| Cooling method | Natural convection | Natural convection |
| Degree of protection | IP20 | IP20 |
| Pollution degree | 3 | 3 |
| Agency approvals | UL, CSA, CE | UL, CSA, CE |

***Mounting Instructions***

**IMPORTANT: The controller is designed for vertical mounting in free air. If the controller is mounted horizontally, the load current must be reduced to 50% of rated current.**

## Recommended Mounting Distances

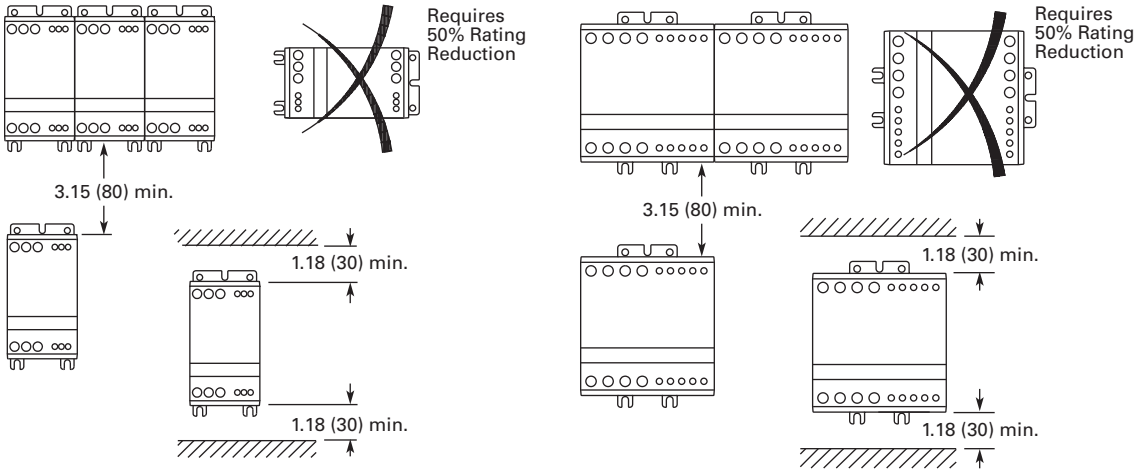


## Dimensions

Approximate Dimensions in Inches (mm)

### Semiconductor Reversing Contactors—S511E10N3_

| Catalog Number | W | H | D | Weight in Lbs (kg) |
|---|---|---|---|---|
| **S511E10N3D** | 1.77 (45.0) | 3.94 (100.1) | 5.04 (128.0) | 1.52 (690) |
| **S511E10N3S** | 1.77 (45.0) | 3.94 (100.1) | 5.04 (128.0) | 1.52 (690) |

Also refer to dimension drawings on **Page V6-T1-18**.

## Cable Requirements and Sizing

| 75°C | AWG ($mm^2$) | AWG ($mm^2$) |
|---|---|---|
| | 18–12<br>(0.75–4) | 20–16<br>(0.5–1.5) |
| | 2–18<br>(2 x 1) | 2 x 20–18<br>(2 x 0.5–0.75) |
| | 18–10<br>(0.75–4) | 20–16<br>(0.5–1.5) |
| | 2 x 18–14<br>(2 x 0.75–2.5) | 2 x 20–16<br>(2 x 0.5–1.5) |
| | 18–10<br>(0.75–4) | 20–16<br>(0.5–1.5) |
| | 2 x 18–16<br>(0.75–6) | 2 x 20–16<br>(2 x 0.5–1.5) |
| | Posidrive 1<br>4.4 in-lb. max.<br>0.5 Nm max.) | N/A |
| | 4 mm<br>4.4 in-lb max.<br>(0.5 Nm max.) | 3 mm<br>3.5 in-lb max.<br>(0.4 Nm max.) |

1

Approximate Dimensions in Inches (mm)

### 22.5 mm Frame

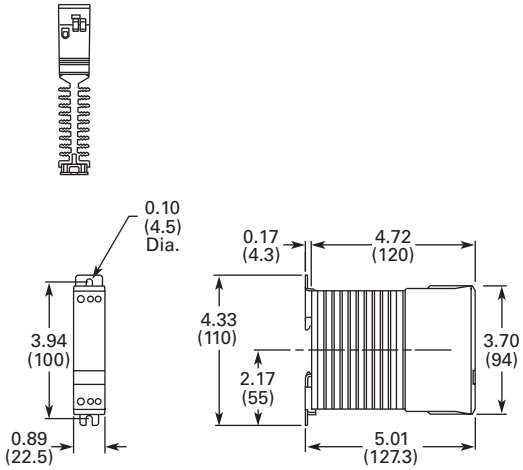


### 90 mm Frame

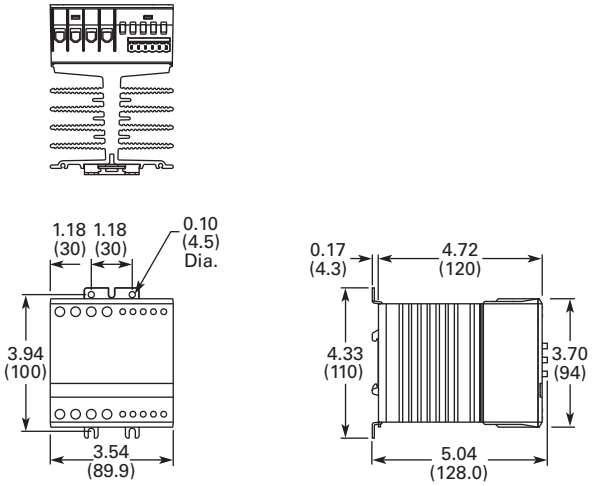


### 45 mm Frame

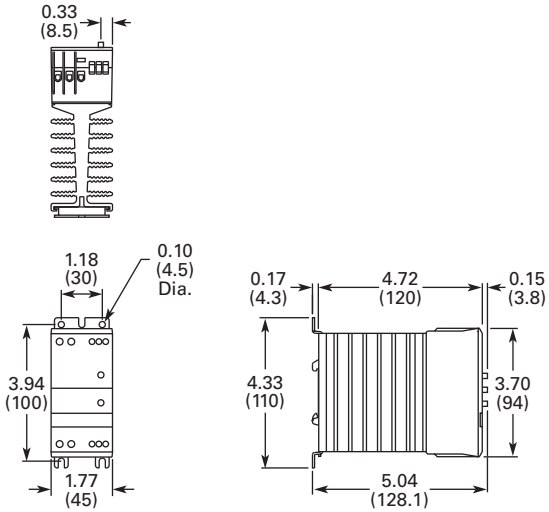

DS7 Soft Start Controllers

## Contents


| *Description* | *Page* |
|---|---|
| Type S701, Soft Start Controllers | **V6-T1-3** |
| Type S701, Soft Start Controllers with Auxiliary Contact | **V6-T1-9** |
| Type S701, Soft Start Controllers with Brake | **V6-T1-12** |
| Type S511, Semiconductor Reversing Contactors | **V6-T1-15** |
| DS7 Soft Start Controllers | |
| Features and Benefits | **V6-T1-21** |
| Standards and Certifications | **V6-T1-21** |
| Instructional Leaflets | **V6-T1-21** |
| Catalog Number Selection | **V6-T1-22** |
| Product Selection | **V6-T1-23** |
| Accessories | **V6-T1-31** |
| Technical Data and Specifications | **V6-T1-32** |
| Dimensions | **V6-T1-40** |


# DS7 Soft Start Controllers

## Product Description

The DS7 is available in standard and SmartWire-DT configurations.

### *Standard (Non SmartWire-DT)*

Eaton's DS7 line of reduced voltage solid-state soft start controllers is very compact, multi-functional, easy to install and easy to commission. Designed to control the acceleration and deceleration of three-phase motors, the device is available for current ranges from 4 to 180 FLA in four frame sizes. It is available with 24 Vdc/24 Vac/120 Vac control voltage options.

### *SmartWire-DT*

Our SmartWire-DT interface completely eliminates the need for conventional control wiring. This has several advantages:

- No incorrect wiring
- Faster wiring
- Cost saving

The interface can be used to send control commands to the DS7 SmartWire-DT and change and diagnose its parameter configuration; in addition, the control electronics can be powered via the SmartWire-DT cable. The device is controlled with one of the selectable profiles:

- A "start/stop" profile
- An 8 bit-wide profile for the soft starter, which is provided the same way for the variable frequency drive and features more options

Regardless of the profile chosen, the DS7 SmartWire-DT's parameters can be read and written to at any time by using acyclic services.

DS7 SmartWire-DT makes it possible to read and write to all device parameters. It is also possible to overwrite the potentiometer settings on the DS7 SmartWire-DT, which can come in handy, for instance, when a change made to the machine needs to be undone.

The DS7 SmartWire-DT comes with a detailed diagnostic system with options that extend far beyond those of wired devices. In addition to having an error log, the DS7 SmartWire-DT can detect and report nine different device faults. A warning parameter reports any present warning messages. Moreover, the response to each individual fault can be customized. Finally, there are 35 additional messages for communication errors. Using the DS7 SmartWire-DT in connection with the PKE opens up new functionalities that were previously thought impossible to implement with a low-cost soft starter and that were reserved to significantly more expensive devices. Combining a PKE unit and a DS7 SmartWire-DT makes it possible to completely protect the DS7 SmartWire-DT device against overloads. In addition, it provides a current limiting function and can report thermal capacity utilization levels to higher level controllers.

## Application Description

With its small size, it can easily fit in place of existing soft starters, wye-delta starters, or across-the-line NEMA® and IEC starters. This feature allows easy upgrades to existing systems. The product is designed to be wired in the three-phase line feeding the three motor input leads as is done for normal across-the-line starting. The starter uses silicon controlled rectifiers (SCRs) to ramp the voltage to the motor, providing smooth acceleration and deceleration of the load. After the motor is started, the internal run bypass relay closes, resulting in the motor running directly across-the-line. Internal run bypass significantly reduces the heat generated as compared to non-bypass starters. The soft stop option allows for a ramp stop time that may be longer than the coast-to-stop time. An external overload protection relay is needed.

## Operation

### *Voltage Ramp Start*

This start method provides a voltage ramp to the motor, resulting in a constant torque increase. This most commonly used form of soft start mode allows you to set the initial voltage value and the duration of the ramp to full voltage conditions.

- Adjustable initial voltage 30–92% of full voltage (120/230 Vac control voltage)
- Adjustable initial voltage 30–100% of full voltage (24 Vac/Vdc control voltage)
- Adjustable initial voltage 30–92% of full voltage (24 Vdc control voltage—SmartWire-DT)
- Adjustable ramp time 1–30 seconds
- Bypass relays close at the end the ramp time (TOR)

### *Soft Stop*

Allows for a controlled stopping of load. Used when a stop-time that is greater than the coast-to-stop time is desired. Often used with high friction loads where a sudden stop may cause system or product damage. Setting the soft stop time to a value of 0 turns off this feature.

- Soft stop time = 0–30 seconds

**Start Ramp**

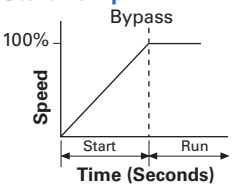


**Stop Ramp**

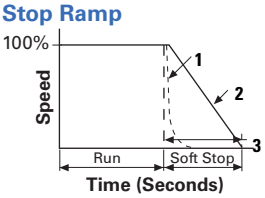


**1** = Coast to Stop (Speed)
**2** = Soft Stop Ramp (Voltage)
**3** = Soft Stop Time

### *Auxiliary Contacts*

Auxiliary contacts are provided to indicate soft start controller status.

**Frame Size 1 (4A to 12A)—One Relay**

The auxiliary relay indicates when the soft starter is at Top-of-Ramp (TOR).

**Frame Size 2, 3 and 4 (16A to 200A)—Two Relays**

One auxiliary relay indicates when the soft starter is at Top-of-Ramp (TOR).

One auxiliary relay indicates that a RUN command is present, including start ramp, bypass, and stop ramp times.

## Features and Benefits

- Run bypass mode greatly reduces internal heating created by the power dissipation across the SCRs. The bypass relay directly connects the motor to the line and improves system efficiency by reducing internal power losses
- Less heat minimizes enclosure size and cooling requirements, and maximizes the life of all devices in the enclosure
- LED displays device status and provides fault indication
- Variable ramp times and voltage control (torque control) settings provide unlimited starting configurations, allowing for maximum application flexibility

### *Single-Phase Applications*

All DS7 frame sizes can be configured for single-phase operation at 200–480 Vac main voltages.

- Soft stop control suits applications where an abrupt stop of the load is not acceptable. Soft acceleration and deceleration reduces wear on belts, gears, chains, clutches, shafts, and bearings
- Minimizes the peak inrush current's stress on the power system. Peak starting torque can be managed to diminish mechanical system wear and damage.
- 24 Vac/Vdc control voltage enhances personnel and equipment safety. 120/230 Vac control voltage is also available
- Auxiliary relays indicate status of the soft start controllers
  - The TOR relay is active until motor stop command is received and/or the soft start controller detects a fault condition
  - RUN relay is active during the start ramp, bypass, and stop ramp

### *Protective Features*

- Mains connection—The mains connection is monitored for a phase loss and/or undervoltage during ramp up
- Motor connection—The motor connection is monitored for an open condition during the ramp
- SCR faults—SCR performance is monitored during the ramp cycle for proper operation
- Heat sink over/under temperature—High ambient temperatures, extended ramp times, and high duty cycle conditions may cause the DS7 to exceed its thermal rating. When temperature goes under –5°C, unit will trip as well. The DS7 is equipped with sensors that monitor the temperature of the device as well. The soft starter will trip in over/under temperature conditions, preventing device failure
- Warning is indicated for an over temperature condition for the next start
- Bypass relay
  - The DS7 can detect if the bypass relay fails to close after the ramp start or opens while the motor is running
  - The DS7 will also detect a condition whereas the bypass relay is closed when the RUN command is given
  - The DS7 will trip on a bypass dropout fault if either of these conditions occur

## Standards and Certifications

- IEC 60947-4-2
- EN 60947-4-2
- UL® listed
- CSA certified
- CE marked
- C-Tick

## Instructional Leaflets

- Instruction Leaflet IL03901001E

1

## Catalog Number Selection

### DS7 Soft Start Controllers

**DS7 - 3 4 0 SX 004 N 0 - N**

**Device Series**
**DS7** = Generation 7

**Number of Phases**
**3** = Three-phase mains supply voltage

**Voltage Class**
**4** = 400V (380V –15% to 480V +10%)

**Control Voltage Supply**
**0** = 24 Vac/Vdc
**2** = 110/230 Vac
**D** = 24 Vdc SmartWire-DT

**Device Version**
**SX** = Standard soft starters with internal bypass

**Rated Operational Current**
**004** = 4A
⋮
**200** = 200A

**Radio Interference Suppression Filters**
**4** = No internal radio interference suppression filters

**Protection Type**
**0** = IP20

**Options**
**N** = No option
**D** = SmartWire-DT

## Product Selection

### *DS7 Soft Start Horsepower Ratings*

**Please refer to Application Note AP039004EN for additional information on proper size selection.**

**DS7 Soft Start Controller—Frames 1 and 2**

### DS7 Soft Start Controllers—Horsepower Ratings—10 Second Ramp, One Start per Hour, 300% Current Limit at 40°C ①

| Rated Current (A) | Motor Power (hp) 200V | 230V | 480V | Maximum Allowable Breaker Size | Maximum Allowable Fuse Size | Recommended XTOB Overload (Direct Connect) ② | Recommended XTOE Overload ② | PKE MMP | MMP ② | Connection Kit to MMP | Catalog Number |
|---|---|---|---|---|---|---|---|---|---|---|---|
| 3.7 | 0.75 | 0.75 | 2 | HFD3015 | 15A Class RK5 | XTOB004BC1 | XTOE005BCS | XTPE012BCS | XTPR004BC1 | XTPAXTPCB | **DS7-340SX004N0-N** ④ |
| | | | | | | | | | | | **DS7-342SX004N0-N** ⑤ |
| | | | | | | | | | | | **DS7-34DSX004N0-D** ⑥ |
| 6.9 | 1.5 | 2 | 3 | HFD3015 | 15A Class RK5 | XTOB006BC1 ③ | XTOE020BCS | XTPE012BCS | XTPR6P3BC1 | XTPAXTPCB | **DS7-340SX007N0-N** ④ |
| | | | | | | | | | | | **DS7-342SX007N0-N** ⑤ |
| | | | | | | | | | | | **DS7-34DSX007N0-D** ⑥ |
| 7.8 | 2 | 2 | 5 | HFD3020 | 20A Class RK5 | XTOB010BC1 | XTOE020BCS | XTPE012BCS | XTPR010BC1 | XTPAXTPCB | **DS7-340SX009N0-N** ④ |
| | | | | | | | | | | | **DS7-342SX009N0-N** ⑤ |
| | | | | | | | | | | | **DS7-34DSX009N0-D** ⑥ |
| 11 | 3 | 3 | 7.5 | HFD3030 | 20A Class RK5 | XTOB012BC1 | XTOE020BCS | XTPE032BCS | XTPR012BC1 | XTPAXTPCB | **DS7-340SX012N0-N** ④ |
| | | | | | | | | | | | **DS7-342SX012N0-N** ⑤ |
| | | | | | | | | | | | **DS7-34DSX012N0-D** ⑥ |
| 15.2 | 3 | 5 | 10 | HFD3035 | 25A Class RK5 | XTOB016CC1 | XTOE020CCS | XTPE032BCS | XTPR016BC1 | XTPAXTPCC | **DS7-340SX016N0-N** ④ |
| | | | | | | | | | | | **DS7-342SX016N0-N** ⑤ |
| | | | | | | | | | | | **DS7-34DSX016N0-D** ⑥ |
| 22 | 5 | 7.5 | 15 | HFD3060 | 40A Class RK5 | XTOB024CC1 | XTOE045CCS | XTPE032BCS | XTPR025BC1 | XTPAXTPCC | **DS7-340SX024N0-N** ④ |
| | | | | | | | | | | | **DS7-342SX024N0-N** ⑤ |
| | | | | | | | | | | | **DS7-34DSX024N0-D** ⑥ |
| 32 | 7.5 | 10 | 20 | HFD3070 | 50A Class RK5 | XTOB032CC1 | XTOE045CCS | XTPE032BCS | XTPR032BC1 | XTPAXTPCC | **DS7-340SX032N0-N** ④ |
| | | | | | | | | | | | **DS7-342SX032N0-N** ⑤ |
| | | | | | | | | | | | **DS7-34DSX032N0-D** ⑥ |

***Notes***

① Actual motor FLAs vary. Verify these devices cover the motor specific FLA.
② Selections are based on motor FLA value at 480V.
③ Not to be used with 230V.
④ 24 Vac/Vdc device.
⑤ 120/230 Vac device.
⑥ 24 Vdc for SmartWire-DT device.

### *Considerations*

1. Either XTOB, C306 or C440 series or equivalent overload protection devices may be selected.
2. Contactor is optional for normal applications. It is recommended for mains isolation.

### *Power Supply*

Eaton's PSG and ELC power supplies are recommended as a compact and low-cost source for 24 Vdc power. The lightweight, DIN rail mounted devices have a wide input voltage range, and robust screw terminals make these power supplies easy to install and use. These power supplies are available in 1A and 2A models.

### Power Supply Selection

| Description | Catalog Number |
|---|---|
| 85–264V input and 24V output | **ELC-PS01** |
| 380–480V input and 24V output | **PSS25F** |
| 100–240 Vac input and 24 Vdc output | **PSS60F** |
| 380–480 Vac input and 24 Vdc output | **PSS60F** |

1

**Please refer to Application Note AP039004EN for additional information on proper size selection.**

**DS7 Soft Start Controller—Frames 3 and 4**

## DS7 Soft Start Controllers—Horsepower Ratings—10 Second Ramp, One Start per Hour, 300% Current Limit at 40°C

| Rated Current (A) | Motor Power (hp) 200V | 230V | 460V | Maximum Allowable Breaker Size ① | Maximum Allowable Fuse Size ① | Recommended XTOB Overload | Recommended C440 Overload | Catalog Number |
|---|---|---|---|---|---|---|---|---|
| 40 | 10 | 10 | 30 | HFD3150L | 150A Class RK5 | XTOB040DC1 ② | C440A1A045SAX | **DS7-340SX041N0-N** ⑤ |
| | | | | | | | | **DS7-342SX041N0-N** ⑥ |
| | | | | | | | | **DS7-34DSX041N0-D** ⑦ |
| 52 | 15 | 20 | 40 | HFD3200L | 200A Class RK5 | XTOB057DC1 ② | C440B1A100SAX | **DS7-340SX055N0-N** ⑤ |
| | | | | | | | | **DS7-342SX055N0-N** ⑥ |
| | | | | | | | | **DS7-34DSX055N0-D** ⑦ |
| 65 | 20 | 25 | 50 | HJD3250 | 200A Class RK5 | XTOB065DC1 ② | C440B1A100SAX | **DS7-340SX070N0-N** ⑤ |
| | | | | | | | | **DS7-342SX070N0-N** ⑥ |
| | | | | | | | | **DS7-34DSX070N0-D** ⑦ |
| 77 | 25 | 30 | 60 | HKD3300 | 300A Class RK5 | XTOB100GC1S | C440B1A100SAX | **DS7-340SX081N0-N** ⑤ |
| | | | | | | | | **DS7-342SX081N0-N** ⑥ |
| | | | | | | | | **DS7-34DSX081N0-D** ⑦ |
| 96 | 30 | 30 | 75 | HKD3350 | 350A Class RK5 | XTOB100GC1S | C440B1A100SAX | **DS7-340SX100N0-N** ⑤ |
| | | | | | | | | **DS7-342SX100N0-N** ⑥ |
| | | | | | | | | **DS7-34DSX100N0-D** ⑦ |
| 124 | 40 | 50 | 100 | HKD3400 | 500A Class RK5 | XTOB125GC1S | C440A1A005SAX ④ | **DS7-340SX135N0-N** ⑤ |
| | | | | | | | | **DS7-342SX135N0-N** ⑥ |
| | | | | | | | | **DS7-34DSX135N0-D** ⑦ |
| 156 | 50 | 60 | 125 | HLD3450 | 500A Class RK5 | XTOB160LC1 ③ | C440A1A005SAX ④ | **DS7-340SX160N0-N** ⑤ |
| | | | | | | | | **DS7-342SX160N0-N** ⑥ |
| | | | | | | | | **DS7-34DSX160N0-D** ⑦ |
| 180 | 60 | 75 | 150 | HLD3500 | 500A Class RK5 | XTOB220LC1 ③ | C440A1A005SAX ④ | **DS7-340SX200N0-N** ⑤ |
| | | | | | | | | **DS7-342SX200N0-N** ⑥ |
| | | | | | | | | **DS7-34DSX200N0-D** ⑦ |

***Notes***

① Maximum values may be higher than allowed per NEC® 430.52 and UL 508A 31.1.
② XTOBXDIND Panel Mounting Adapter must be used with this overload.
③ XTOBXTLL line and load lugs must be used with this overload.
④ ZEB-XCT300 current transformer must be used with this overload.
⑤ 24 Vac/Vdc device.
⑥ 120/230 Vac device.
⑦ 24 Vdc for SmartWire-DT device.

### *Considerations*

1. Either XTOB, C306 or C440 series or equivalent overload protection devices may be selected.
2. Contactor is optional for normal applications. It is recommended for mains isolation.

### *Power Supply*

Eaton's PSG and ELC power supplies are recommended as a compact and low-cost source for 24 Vdc power. The lightweight, DIN rail mounted devices have a wide input voltage range, and robust screw terminals make these power supplies easy to install and use. These power supplies are available in 1A and 2A models.

## Power Supply Selection

| Description | Catalog Number |
|---|---|
| 85–264V input and 24V output | **ELC-PS01** |
| 380–480V input and 24V output | **PSS25F** |
| 100–240 Vac input and 24 Vdc output | **PSS60F** |
| 380–480 Vac input and 24 Vdc output | **PSS60F** |

**Please refer to Application Note AP039004EN for additional information on proper size selection.**

**DS7 Soft Start Controller—Frames 1 and 2**

## DS7 Soft Start Controllers—Horsepower Ratings—10 Second Ramp, One Start per Hour, 400% Current Limit at 40°C ①

| Rated Current (A) | Motor Power (hp) 200V | 230V | 480V | Maximum Allowable Breaker Size | Maximum Allowable Fuse Size | Recommended XTOB Overload (Direct Connect) ② | Recommended XTOE Overload ② | PKE MMP | MMP ② | Connection Kit to MMP | Catalog Number |
|---|---|---|---|---|---|---|---|---|---|---|---|
| 3 | 0.5 | 0.5 | 1.5 | HFD3015 | 15A Class RK5 | XTOB004BC1 | XTOE005BCS | XTPE012BCS | XTPR004BC1 | XTPAXTPCB | **DS7-340SX004N0-N** ④ |
| | | | | | | | | | | | **DS7-342SX004N0-N** ⑤ |
| | | | | | | | | | | | **DS7-34DSX004N0-D** ⑥ |
| 4.8 | 1 | 1 | 3 | HFD3015 | 15A Class RK5 | XTOB006BC1 ③ | XTOE020BCS | XTPE012BCS | XTPR6P3BC1 | XTPAXTPCB | **DS7-340SX007N0-N** ④ |
| | | | | | | | | | | | **DS7-342SX007N0-N** ⑤ |
| | | | | | | | | | | | **DS7-34DSX007N0-D** ⑥ |
| 6.9 | 1.5 | 2 | 3 | HFD3020 | 20A Class RK5 | XTOB006BC1 | XTOE020BCS | XTPE012BCS | XTPR6P3BC1 | XTPAXTPCB | **DS7-340SX009N0-N** ④ |
| | | | | | | | | | | | **DS7-342SX009N0-N** ⑤ |
| | | | | | | | | | | | **DS7-34DSX009N0-D** ⑥ |
| 9 | 2 | 2 | 5 | HFD3030 | 20A Class RK5 | XTOB010BC1 | XTOE020BCS | XTPE032BCS | XTPR010BC1 | XTPAXTPCB | **DS7-340SX012N0-N** ④ |
| | | | | | | | | | | | **DS7-342SX012N0-N** ⑤ |
| | | | | | | | | | | | **DS7-34DSX012N0-D** ⑥ |
| 11 | 3 | 3 | 7.5 | HFD3035 | 25A Class RK5 | XTOB016CC1 | XTOE020CCS | XTPE032BCS | XTPR016BC1 | XTPAXTPCC | **DS7-340SX016N0-N** ④ |
| | | | | | | | | | | | **DS7-342SX016N0-N** ⑤ |
| | | | | | | | | | | | **DS7-34DSX016N0-D** ⑥ |
| 17.5 | 5 | 5 | 10 | HFD3060 | 40A Class RK5 | XTOB016CC1 | XTOE045CCS | XTPE032BCS | XTPR016BC1 | XTPAXTPCC | **DS7-340SX024N0-N** ④ |
| | | | | | | | | | | | **DS7-342SX024N0-N** ⑤ |
| | | | | | | | | | | | **DS7-34DSX024N0-D** ⑥ |
| 22 | 5 | 7.5 | 15 | HFD3070 | 50A Class RK5 | XTOB024CC1 | XTOE045CCS | XTPE032BCS | XTPR025BC1 | XTPAXTPCC | **DS7-340SX032N0-N** ④ |
| | | | | | | | | | | | **DS7-342SX032N0-N** ⑤ |
| | | | | | | | | | | | **DS7-34DSX032N0-D** ⑥ |

***Notes***

① Actual motor FLAs vary. Verify these devices cover the motor specific FLA.
② Selections are based on motor FLA value at 480V.
③ Not to be used with 230V.
④ 24 Vac/Vdc device.
⑤ 120/230 Vac device.
⑥ 24 Vdc for SmartWire-DT device.

### *Considerations*

1. Either XTOB, C306 or C440 series or equivalent overload protection devices may be selected.
2. Contactor is optional for normal applications. It is recommended for mains isolation.

### *Power Supply*

Eaton's PSG and ELC power supplies are recommended as a compact and low-cost source for 24 Vdc power. The lightweight, DIN rail mounted devices have a wide input voltage range, and robust screw terminals make these power supplies easy to install and use. These power supplies are available in 1A and 2A models.

## Power Supply Selection

| Description | Catalog Number |
|---|---|
| 85–264V input and 24V output | **ELC-PS01** |
| 380–480V input and 24V output | **PSS25F** |
| 100–240 Vac input and 24 Vdc output | **PSS60F** |
| 380–480 Vac input and 24 Vdc output | **PSS60F** |

1

**Please refer to Application Note AP039004EN for additional information on proper size selection.**

**DS7 Soft Start Controller—Frames 3 and 4**

## DS7 Soft Start Controllers—Horsepower Ratings—10 Second Ramp, One Start per Hour, 400% Current Limit at 40°C

| Rated Current (A) | Motor Power (hp) 200V | 230V | 460V | Maximum Allowable Breaker Size ① | Maximum Allowable Fuse Size ① | Recommended XTOB Overload | Recommended C440 Overload | Catalog Number |
|---|---|---|---|---|---|---|---|---|
| 27 | 7.5 | 10 | 20 | HFD3150L | 150A Class RK5 | XTOB040DC1 | C440A1A045SAX | **DS7-340SX041N0-N** ④ |
| | | | | | | | | **DS7-342SX041N0-N** ⑤ |
| | | | | | | | | **DS7-34DSX041N0-D** ⑥ |
| 34 | 10 | 10 | 30 | HFD3200L | 200A Class RK5 | XTOB040DC1 | C440A1A045SAX | **DS7-340SX055N0-N** ④ |
| | | | | | | | | **DS7-342SX055N0-N** ⑤ |
| | | | | | | | | **DS7-34DSX055N0-D** ⑥ |
| 40 | 15 | 15 | 30 | HJD3250 | 200A Class RK5 | XTOB057DC1 ② | C440A1A045SAX | **DS7-340SX070N0-N** ④ |
| | | | | | | | | **DS7-342SX070N0-N** ⑤ |
| | | | | | | | | **DS7-34DSX070N0-D** ⑥ |
| 52 | 15 | 20 | 40 | HKD3300 | 300A Class RK5 | XTOB057DC1 ② | C440B1A100SAX | **DS7-340SX081N0-N** ④ |
| | | | | | | | | **DS7-342SX081N0-N** ⑤ |
| | | | | | | | | **DS7-34DSX081N0-D** ⑥ |
| 65 | 20 | 25 | 50 | HKD3350 | 350A Class RK5 | XTOB100GC1S | C440B1A100SAX | **DS7-340SX100N0-N** ④ |
| | | | | | | | | **DS7-342SX100N0-N** ⑤ |
| | | | | | | | | **DS7-34DSX100N0-D** ⑥ |
| 80 | 30 | 30 | 75 | HKD3350 | 500A Class RK5 | XTOB100GC1S | C440B1A100SAX | **DS7-340SX135N0-N** ④ |
| | | | | | | | | **DS7-342SX135N0-N** ⑤ |
| | | | | | | | | **DS7-34DSX135N0-D** ⑥ |
| 96 | 30 | 40 | 75 | HLD3450 | 500A Class RK5 | XTOB100GC1S | C440B1A100SAX | **DS7-340SX160N0-N** ④ |
| | | | | | | | | **DS7-342SX160N0-N** ⑤ |
| | | | | | | | | **DS7-34DSX160N0-D** ⑥ |
| 124 | 40 | 50 | 100 | HLD3500 | 500A Class RK5 | XTOB150GC1S | C440A1A005SAX ③ | **DS7-340SX200N0-N** ④ |
| | | | | | | | | **DS7-342SX200N0-N** ⑤ |
| | | | | | | | | **DS7-34DSX200N0-D** ⑥ |

***Notes***

① Maximum values may be higher than allowed per NEC® 430.52 and UL 508A 31.1.
② XTOBXDIND Panel Mounting Adapter must be used with this overload.
③ ZEB-XCT300 current transformer must be used with this overload.
④ 24 Vac/Vdc device.
⑤ 120/230 Vac device.
⑥ 24 Vdc for SmartWire-DT device.

### *Considerations*

1. Either XTOB, C306 or C440 series or equivalent overload protection devices may be selected.
2. Contactor is optional for normal applications. It is recommended for mains isolation.

### *Power Supply*

Eaton's PSG and ELC power supplies are recommended as a compact and low-cost source for 24 Vdc power. The lightweight, DIN rail mounted devices have a wide input voltage range, and robust screw terminals make these power supplies easy to install and use. These power supplies are available in 1A and 2A models.

## Power Supply Selection

| Description | Catalog Number |
|---|---|
| 85–264V input and 24V output | **ELC-PS01** |
| 380–480V input and 24V output | **PSS25F** |
| 100–240 Vac input and 24 Vdc output | **PSS60F** |
| 380–480 Vac input and 24 Vdc output | **PSS60F** |

### *DS7 Soft Start kW Ratings*

**Please refer to Application Note AP039004EN for additional information on proper size selection.**

**DS7 Soft Start Controller—Frames 1 and 2**

## DS7 Soft Start Controllers—kW Ratings According to IEC 60947-4-2—10 Second Ramp, One Start per Hour, 300% Current Limit at 40°C ①

| Rated Current (A) | Motor Power (kW) 230V | Motor Power (kW) 400V | Maximum Allowable Breaker Size | Maximum Allowable Fuse Size | Recommended XTOB Overload (Direct Connect) ② | Recommended XTOE Overload ② | PKE MMP | MMP ② | Connection Kit to MMP | Catalog Number |
|---|---|---|---|---|---|---|---|---|---|---|
| 3.8 | 0.75 | 1.5 | HFD3015 | 15A Class RK5 | XTOB004BC1 | XTOE005BCS | XTPE012BCS | XTPR004BC1 | XTPAXTPCB | **DS7-340SX004N0-N** ④ |
| | | | | | | | | | | **DS7-342SX004N0-N** ⑤ |
| | | | | | | | | | | **DS7-34DSX004N0-D** ⑥ |
| 7 | 1.5 | 3 | HFD3015 | 15A Class RK5 | XTOB006BC1 ③ | XTOE020BCS | XTPE012BCS | XTPR6P3BC1 | XTPAXTPCB | **DS7-340SX007N0-N** ④ |
| | | | | | | | | | | **DS7-342SX007N0-N** ⑤ |
| | | | | | | | | | | **DS7-34DSX007N0-D** ⑥ |
| 9 | 2.2 | 4 | HFD3020 | 20A Class RK5 | XTOB010BC1 | XTOE020BCS | XTPE012BCS | XTPR010BC1 | XTPAXTPCB | **DS7-340SX009N0-N** ④ |
| | | | | | | | | | | **DS7-342SX009N0-N** ⑤ |
| | | | | | | | | | | **DS7-34DSX009N0-D** ⑥ |
| 12 | 3 | 5.5 | HFD3030 | 20A Class RK5 | XTOB012BC1 | XTOE020BCS | XTPE032BCS | XTPR012BC1 | XTPAXTPCB | **DS7-340SX012N0-N** ④ |
| | | | | | | | | | | **DS7-342SX012N0-N** ⑤ |
| | | | | | | | | | | **DS7-34DSX012N0-D** ⑥ |
| 16 | 4 | 7.5 | HFD3035 | 25A Class RK5 | XTOB016CC1 | XTOE020CCS | XTPE032BCS | XTPR016BC1 | XTPAXTPCC | **DS7-340SX016N0-N** ④ |
| | | | | | | | | | | **DS7-342SX016N0-N** ⑤ |
| | | | | | | | | | | **DS7-34DSX016N0-D** ⑥ |
| 24 | 5.5 | 11 | HFD3060 | 40A Class RK5 | XTOB024CC1 | XTOE045CCS | XTPE032BCS | XTPR025BC1 | XTPAXTPCC | **DS7-340SX024N0-N** ④ |
| | | | | | | | | | | **DS7-342SX024N0-N** ⑤ |
| | | | | | | | | | | **DS7-34DSX024N0-D** ⑥ |
| 32 | 7.5 | 15 | HFD3070 | 50A Class RK5 | XTOB032CC1 | XTOE045CCS | XTPE032BCS | XTPR032BC1 | XTPAXTPCC | **DS7-340SX032N0-N** ④ |
| | | | | | | | | | | **DS7-342SX032N0-N** ⑤ |
| | | | | | | | | | | **DS7-34DSX032N0-D** ⑥ |

***Notes***

① Actual motor FLAs vary. Verify these devices cover the motor specific FLA.
② Selections are based on motor FLA value at 480V.
③ Not to be used with 230V.
④ 24 Vac/Vdc device.
⑤ 120/230 Vac device.
⑥ 24 Vdc for SmartWire-DT device.

### *Considerations*

1. Either XTOB, C306 or C440 series or equivalent overload protection devices may be selected.
2. Contactor is optional for normal applications. It is recommended for mains isolation.

### *Power Supply*

Eaton's PSG and ELC power supplies are recommended as a compact and low-cost source for 24 Vdc power. The lightweight, DIN rail mounted devices have a wide input voltage range, and robust screw terminals make these power supplies easy to install and use. These power supplies are available in 1A and 2A models.

## Power Supply Selection

| Description | Catalog Number |
|---|---|
| 85–264V input and 24V output | **ELC-PS01** |
| 380–480V input and 24V output | **PSS25F** |
| 100–240 Vac input and 24 Vdc output | **PSS60F** |
| 380–480 Vac input and 24 Vdc output | **PSS60F** |

1

**Please refer to Application Note AP039004EN for additional information on proper size selection.**

**DS7 Soft Start Controller—Frames 3 and 4**

## DS7 Soft Start Controllers—kW Ratings According to IEC 60947-4-2—10 Second Ramp, One Start per Hour, 300% Current Limit at 40°C

| Rated Current (A) | Motor Power (kW) 230V | Motor Power (kW) 400V | Maximum Allowable Breaker Size ① | Maximum Allowable Fuse Size ① | Recommended XTOB Overload | Recommended C440 Overload | Catalog Number |
|---|---|---|---|---|---|---|---|
| 41 | 11 | 22 | HFD3150L | 150A Class RK5 | XTOB057DC1 ② | C440A1A045SAX | **DS7-340SX041N0-N** ⑤ |
| | | | | | | | **DS7-342SX041N0-N** ⑥ |
| | | | | | | | **DS7-34DSX041N0-D** ⑦ |
| 55 | 15 | 30 | HFD3200L | 200A Class RK5 | XTOB057DC1 ② | C440B1A100SAX | **DS7-340SX055N0-N** ⑤ |
| | | | | | | | **DS7-342SX055N0-N** ⑥ |
| | | | | | | | **DS7-34DSX055N0-D** ⑦ |
| 68 | 15 | 37 | HJD3250 | 200A Class RK5 | XTOB070GC1 ② | C440B1A100SAX | **DS7-340SX070N0-N** ⑤ |
| | | | | | | | **DS7-342SX070N0-N** ⑥ |
| | | | | | | | **DS7-34DSX070N0-D** ⑦ |
| 81 | 22 | 45 | HKD3300 | 300A Class RK5 | XTOB100GC1S | C440B1A100SAX | **DS7-340SX081N0-N** ⑤ |
| | | | | | | | **DS7-342SX081N0-N** ⑥ |
| | | | | | | | **DS7-34DSX081N0-D** ⑦ |
| 99 | 30 | 55 | HKD3350 | 350A Class RK5 | XTOB100GC1S | C440B1A100SAX | **DS7-340SX100N0-N** ⑤ |
| | | | | | | | **DS7-342SX100N0-N** ⑥ |
| | | | | | | | **DS7-34DSX041N0-D** ⑦ |
| 134 | 30 | 75 | HKD3400 | 500A Class RK5 | XTOB150GC1S | C440A1A005SAX ④ | **DS7-340SX135N0-N** ⑤ |
| | | | | | | | **DS7-342SX135N0-N** ⑥ |
| | | | | | | | **DS7-34DSX135N0-D** ⑦ |
| 160 | 45 | 90 | HLD3450 | 500A Class RK5 | XTOB160LC1 ③ | C440A1A005SAX ④ | **DS7-340SX160N0-N** ⑤ |
| | | | | | | | **DS7-342SX160N0-N** ⑥ |
| | | | | | | | **DS7-34DSX160N0-D** ⑦ |
| 196 | 55 | 110 | HLD3500 | 500A Class RK5 | XTOB220LC1 ③ | C440A1A005SAX ④ | **DS7-340SX200N0-N** ⑤ |
| | | | | | | | **DS7-342SX200N0-N** ⑥ |
| | | | | | | | **DS7-34DSX200N0-D** ⑦ |

***Notes***

① Maximum values may be higher than allowed per NEC 430.52 and UL 508A 31.1.
② XTOBXDIND Panel Mounting Adapter must be used with this overload.
③ XTOBXTLL line and load lugs must be used with this overload.
④ ZEB-XCT300 current transformer must be used with this overload.
⑤ 24 Vac/Vdc device.
⑥ 120/230 Vac device.
⑦ 24 Vdc for SmartWire-DT device.

### *Considerations*

1. Either XTOB, C306 or C440 series or equivalent overload protection devices may be selected.
2. Contactor is optional for normal applications. It is recommended for mains isolation.

### *Power Supply*

Eaton's PSG and ELC power supplies are recommended as a compact and low-cost source for 24 Vdc power. The lightweight, DIN rail mounted devices have a wide input voltage range, and robust screw terminals make these power supplies easy to install and use. These power supplies are available in 1A and 2A models.

## Power Supply Selection

| Description | Catalog Number |
|---|---|
| 85–264V input and 24V output | **ELC-PS01** |
| 380–480V input and 24V output | **PSS25F** |
| 100–240 Vac input and 24 Vdc output | **PSS60F** |
| 380–480 Vac input and 24 Vdc output | **PSS60F** |

**Please refer to Application Note AP039004EN for additional information on proper size selection.**

**DS7 Soft Start Controller—Frames 1 and 2**

## DS7 Soft Start Controllers—kW Ratings According to IEC 60947-4-2—10 Second Ramp, One Start per Hour, 400% Current Limit at 40°C ①

| Rated Current (A) | Motor Power (kW) 230V | 400V | Maximum Allowable Breaker Size | Maximum Allowable Fuse Size | Recommended XTOB Overload (Direct Connect) ② | Recommended XTOE Overload ② | PKE MMP | MMP ② | Connection Kit to MMP | Catalog Number |
|---|---|---|---|---|---|---|---|---|---|---|
| 2.5 | 0.33 | 1 | HFD3015 | 15A Class RK5 | XTOB004BC1 | XTOE005BCS | XTPE012BCS | XTPR004BC1 | XTPAXTPCB | **DS7-340SX004N0-N** ④ |
| | | | | | | | | | | **DS7-342SX004N0-N** ⑤ |
| | | | | | | | | | | **DS7-34DSX004N0-D** ⑥ |
| 3.8 | 0.75 | 1.5 | HFD3015 | 15A Class RK5 | XTOB006BC1 ③ | XTOE020BCS | XTPE012BCS | XTPR6P3BC1 | XTPAXTPCB | **DS7-340SX007N0-N** ④ |
| | | | | | | | | | | **DS7-342SX007N0-N** ⑤ |
| | | | | | | | | | | **DS7-34DSX007N0-D** ⑥ |
| 7 | 1.5 | 3 | HFD3020 | 20A Class RK5 | XTOB006BC1 | XTOE020BCS | XTPE012BCS | XTPR6P3BC1 | XTPAXTPCB | **DS7-340SX009N0-N** ④ |
| | | | | | | | | | | **DS7-342SX009N0-N** ⑤ |
| | | | | | | | | | | **DS7-34DSX009N0-D** ⑥ |
| 9 | 2.2 | 4 | HFD3030 | 20A Class RK5 | XTOB010BC1 | XTOE020BCS | XTPE032BCS | XTPR010BC1 | XTPAXTPCB | **DS7-340SX012N0-N** ④ |
| | | | | | | | | | | **DS7-342SX012N0-N** ⑤ |
| | | | | | | | | | | **DS7-34DSX012N0-D** ⑥ |
| 12 | 3 | 5.5 | HFD3035 | 25A Class RK5 | XTOB016CC1 | XTOE020CCS | XTPE032BCS | XTPR016BC1 | XTPAXTPCC | **DS7-340SX016N0-N** ④ |
| | | | | | | | | | | **DS7-342SX016N0-N** ⑤ |
| | | | | | | | | | | **DS7-34DSX016N0-D** ⑥ |
| 16 | 4 | 7.5 | HFD3060 | 40A Class RK5 | XTOB016CC1 | XTOE045CCS | XTPE032BCS | XTPR016BC1 | XTPAXTPCC | **DS7-340SX024N0-N** ④ |
| | | | | | | | | | | **DS7-342SX024N0-N** ⑤ |
| | | | | | | | | | | **DS7-34DSX016N0-D** ⑥ |
| 24 | 5.5 | 11 | HFD3070 | 50A Class RK5 | XTOB024CC1 | XTOE045CCS | XTPE032BCS | XTPR025BC1 | XTPAXTPCC | **DS7-340SX032N0-N** ④ |
| | | | | | | | | | | **DS7-342SX032N0-N** ⑤ |
| | | | | | | | | | | **DS7-34DSX032N0-D** ⑥ |

***Notes***

① Actual motor FLAs vary. Verify these devices cover the motor specific FLA.
② Selections are based on motor FLA value at 480V.
③ Not to be used with 230V.
④ 24 Vac/Vdc device.
⑤ 120/230 Vac device.
⑥ 24 Vdc for SmartWire-DT device.

### *Considerations*

1. Either XTOB, C306 or C440 series or equivalent overload protection devices may be selected.
2. Contactor is optional for normal applications. It is recommended for mains isolation.

### *Power Supply*

Eaton's PSG and ELC power supplies are recommended as a compact and low-cost source for 24 Vdc power. The lightweight, DIN rail mounted devices have a wide input voltage range, and robust screw terminals make these power supplies easy to install and use. These power supplies are available in 1A and 2A models.

## Power Supply Selection

| Description | Catalog Number |
|---|---|
| 85–264V input and 24V output | **ELC-PS01** |
| 380–480V input and 24V output | **PSS25F** |
| 100–240 Vac input and 24 Vdc output | **PSS60F** |
| 380–480 Vac input and 24 Vdc output | **PSS60F** |

1

**Please refer to Application Note AP039004EN for additional information on proper size selection.**

**DS7 Soft Start Controller—Frames 3 and 4**

## DS7 Soft Start Controllers—kW Ratings According to IEC 60947-4-2—10 Second Ramp, One Start per Hour, 400% Current Limit at 40°C

| Rated Current (A) | Motor Power (kW) 230V | Motor Power (kW) 400V | Maximum Allowable Breaker Size ① | Maximum Allowable Fuse Size ① | Recommended XTOB Overload | Recommended C440 Overload | Catalog Number |
|---|---|---|---|---|---|---|---|
| 28.8 | 7.5 | 11 | HFD3150L | 150A Class RK5 | XTOB040DC1 | C440A1A045SAX | **DS7-340SX041N0-N** ⑤ |
| | | | | | | | **DS7-342SX041N0-N** ⑥ |
| 37.5 | 11 | 18.5 | HFD3200L | 200A Class RK5 | XTOB040DC1 | C440A1A045SAX | **DS7-340SX055N0-N** ⑤ |
| | | | | | | | **DS7-342SX055N0-N** ⑥ |
| 46 | 11 | 22 | HJD3250 | 200A Class RK5 | XTOB057DC1 ② | C440B1A100SAX | **DS7-340SX070N0-N** ⑤ |
| | | | | | | | **DS7-342SX070N0-N** ⑥ |
| 56 | 15 | 30 | HKD3300 | 300A Class RK5 | XTOB065DC1 ② | C440B1A100SAX | **DS7-340SX081N0-N** ⑤ |
| | | | | | | | **DS7-342SX081N0-N** ⑥ |
| 68 | 18.5 | 37 | HKD3350 | 350A Class RK5 | XTOB100GC1S | C440B1A100SAX | **DS7-340SX100N0-N** ⑤ |
| | | | | | | | **DS7-342SX100N0-N** ⑥ |
| 90 | 22 | 45 | HKD3350 | 500A Class RK5 | XTOB100GC1S | C440B1A100SAX | **DS7-340SX135N0-N** ⑤ |
| | | | | | | | **DS7-342SX135N0-N** ⑥ |
| 106 | 30 | 55 | HLD3450 | 500A Class RK5 | XTOB160LC1 ③ | C440A1A005SAX ④ | **DS7-340SX160N0-N** ⑤ |
| | | | | | | | **DS7-342SX160N0-N** ⑥ |
| 134 | 37 | 75 | HLD3500 | 500A Class RK5 | XTOB160LC1 ③ | C440A1A005SAX ④ | **DS7-340SX200N0-N** ⑤ |
| | | | | | | | **DS7-342SX200N0-N** ⑥ |

***Notes***

① Maximum values may be higher than allowed per NEC 430.52 and UL 508A 31.1.
② XTOBXDIND Panel Mounting Adapter must be used with this overload.
③ XTOBXTLL line and load lugs must be used with this overload.
④ ZEB-XCT300 current transformer must be used with this overload.
⑤ 24 Vac/Vdc device.
⑥ 24 Vdc for SmartWire-DT device.

### *Considerations*

1. Either XTOB, C306 or C440 series or equivalent overload protection devices may be selected.
2. Contactor is optional for normal applications. It is recommended for mains isolation.

### *Power Supply*

Eaton's PSG and ELC power supplies are recommended as a compact and low-cost source for 24 Vdc power. The lightweight, DIN rail mounted devices have a wide input voltage range, and robust screw terminals make these power supplies easy to install and use. These power supplies are available in 1A and 2A models.

## Power Supply Selection

| Description | Catalog Number |
|---|---|
| 85–264V input and 24V output | **ELC-PS01** |
| 380–480V input and 24V output | **PSS25F** |
| 100–240 Vac input and 24 Vdc output | **PSS60F** |
| 380–480 Vac input and 24 Vdc output | **PSS60F** |

## Accessories

### Device Fans

| | Description | For Use With … | Std. Pack | Catalog Number |
|---|---|---|---|---|
| **DS7-FAN-032** | Device fan for increasing the load cycle (more starts per hour higher or longer ramp times exceeding 10 seconds. | DS7-34…SX004…<br>DS7-34…SX007…<br>DS7-34…SX009…<br>DS7-34…SX012…<br>DS7-34…SX016…<br>DS7-34…SX024…<br>DS7-34…SX032… | 1 off | **DS7-FAN-032** ① |
| **DS7-FAN-100** 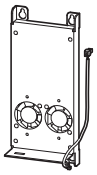 | | DS7-34…SX041…<br>DS7-34…SX055…<br>DS7-34…SX070…<br>DS7-34…SX081…<br>DS7-34…SX100… | 1 off | **DS7-FAN-100** |
| | | DS7-34…SX135…<br>DS7-34…SX160…<br>DS7-34…SX200… | 1 off | **DS7-FAN-200** |

***Note***

① NA Certification. Request filed for UL and CSA.

1

## Technical Data and Specifications

### DS7 Soft Start Controllers

**Rated Control Circuit**

| Voltage 24 Vac/Vdc<br>Voltage 110/230 Vac<br>Voltage 24 Vdc | Unit | DS7-340SX004N0-N<br>DS7-342SX004N0-N<br>DS7-34DSX004N0-D | DS7-340SX007N0-N<br>DS7-342SX007N0-N<br>DS7-34DSX007N0-D | DS7-340SX009N0-N<br>DS7-342SX009N0-N<br>DS7-34DSX009N0-D | DS7-340SX012N0-N<br>DS7-342SX012N0-N<br>DS7-34DSX012N0-D |
|---|---|---|---|---|---|
| **General** | | | | | |
| Standards | | IEC/EN 60947-4-2; GB14048.6; UL508; CSA-C22.2 No 0-M91; CSA-C22.2 No 14-05 CE marking | IEC/EN 60947-4-2; GB14048.6; UL508; CSA-C22.2 No 0-M91; CSA-C22.2 No 14-05 CE marking | IEC/EN 60947-4-2; GB14048.6; UL508; CSA-C22.2 No 0-M91; CSA-C22.2 No 14-05 CE marking | IEC/EN 60947-4-2; GB14048.6; UL508; CSA-C22.2 No 0-M91; CSA-C22.2 No 14-05 CE marking |
| Certifications/marking | | UL/CE/CSA/C-Tick | UL/CE/CSA/C-Tick | UL/CE/CSA/C-Tick | UL/CE/CSA/C-Tick |
| Ambient temperature (operation) | °C | 0 to 40°C, above 40°C de-rate linearly by 1% of rated current per Celsius to 60°C | 0 to 40°C, above 40°C de-rate linearly by 1% of rated current per Celsius to 60°C | 0 to 40°C, above 40°C de-rate linearly by 1% of rated current per Celsius to 60°C | 0 to 40°C, above 40°C de-rate linearly by 1% of rated current per Celsius to 60°C |
| Ambient temperature (storage) | °C | –25 to 55°C | –25 to 55°C | –25 to 55°C | –25 to 55°C |
| Altitude | | 0–1000m, above 1000m de-rate linearly by 2.5% of rated current per 100m to a maximum of 2000m | 0–1000m, above 1000m de-rate linearly by 2.5% of rated current per 100m to a maximum of 2000m | 0–1000m, above 1000m de-rate linearly by 2.5% of rated current per 100m to a maximum of 2000m | 0–1000m, above 1000m de-rate linearly by 2.5% of rated current per 100m to a maximum of 2000m |
| Installation | | Vertical | Vertical | Vertical | Vertical |
| Protection class | | IP20 | IP20 | IP20 | IP20 |
| Protection class applies to the front and operator control and display elements. Protection type from all sides is IP00. | | With optional covers from the NZM range, protection type IP40 from all sides can be achieved | With optional covers from the NZM range, protection type IP40 from all sides can be achieved | With optional covers from the NZM range, protection type IP40 from all sides can be achieved | With optional covers from the NZM range, protection type IP40 from all sides can be achieved |
| Busbar tag shroud | | Back of hand and finger-proof (from front face) | Back of hand and finger-proof (from front face) | Back of hand and finger-proof (from front face) | Back of hand and finger-proof (from front face) |
| Overvoltage category/ pollution degree | | II/2 | II/2 | II/2 | II/2 |
| Shock resistance | | 8g/11ms | 8g/11ms | 8g/11ms | 8g/11ms |
| Vibration resistance according to EN 60721-3-2 | | 2M2 | 2M2 | 2M2 | 2M2 |
| Mean heat dissipation at rated duty cycle | W | 0.2 | 0.35 | 0.35 | 0.6 |
| Radio interference | | B | B | B | B |
| Dimensions (W x H x D) | | | | | |
| DS7-340… and DS7-342… | in (mm) | 1.77 x 5.12 x 3.74 (45 x 130 x 95) | 1.77 x 5.12 x 3.74 (45 x 130 x 95) | 1.77 x 5.12 x 3.74 (45 x 130 x 95) | 1.77 x 5.12 x 3.74 (45 x 130 x 95) |
| DS7-34D… | in (mm) | 1.77 x 5.31 x 3.74 (45 x 135 x 95) | 1.77 x 5.31 x 3.74 (45 x 135 x 95) | 1.77 x 5.31 x 3.74 (45 x 135 x 95) | 1.77 x 5.31 x 3.74 (45 x 135 x 95) |
| Weight | | | | | |
| DS7-340… | lb (kg) | 0.77 (0.35) | 0.77 (0.35) | 0.77 (0.35) | 0.77 (0.35) |
| DS7-342… | lb (kg) | 0.88 (0.40) | 0.88 (0.40) | 0.88 (0.40) | 0.88 (0.40) |
| DS7-34D… | lb (kg) | 0.90 (0.41) | 0.90 (0.41) | 0.90 (0.41) | 0.90 (0.41) |
| **Main Circuit** | | | | | |
| Rated operational voltage | V | 230–460 Vac | 230–460 Vac | 230–460 Vac | 230–460 Vac |
| Mains frequency | Hz | 50/60 Hz | 50/60 Hz | 50/60 Hz | 50/60 Hz |
| Rated operation current AC 53 | $I_e$ | 4 | 7 | 9 | 12 |
| **Motor Power Ratings** | | | | | |
| 200V | hp | 0.75 | 1.5 | 2 | 3 |
| 230V | hp | 0.75 | 2 | 2 | 5 |
| 480V | hp | 2 | 3 | 5 | 10 |
| 230V | kW | 0.75 | 1.5 | 2.2 | 3 |
| 400V | kW | 1.5 | 3 | 4 | 5.5 |
| Overload cycle according to EN 60947-4-2 | | 4A: AC53a; 3-5; 75-10 | 7A: AC53a; 3-5; 75-10 | 9A: AC53a; 3-5; 75-10 | 12A: AC53a; 3-5; 75-10 |

## DS7 Soft Start Controllers, continued

**Rated Control Circuit**

| Voltage 24 Vac/Vdc<br>Voltage 110/230 Vac<br>Voltage 24 Vdc | Unit | DS7-340SX004N0-N<br>DS7-342SX004N0-N<br>DS7-34DSX004N0-D | DS7-340SX007N0-N<br>DS7-342SX007N0-N<br>DS7-34DSX007N0-D | DS7-340SX009N0-N<br>DS7-342SX009N0-N<br>DS7-34DSX009N0-D | DS7-340SX012N0-N<br>DS7-342SX012N0-N<br>DS7-34DSX012N0-D |
|---|---|---|---|---|---|
| **Wire Specifications** | | | | | |
| Power terminals | | | | | |
| Single conductor—solid or stranded | AWG | 18–10 | 18–10 | 18–10 | 18–10 |
| Terminal torque | lb-in | 11 | 11 | 11 | 11 |
| Control signals | | | | | |
| Single conductor—solid or stranded | AWG | 18–10 | 18–10 | 18–10 | 18–10 |
| Terminal torque | lb-in | 11 | 11 | 11 | 11 |
| **Power Section** | | | | | |
| Rated impulse withstand voltage | $U_{imp}$ 1.2/ 50_s | 4 kV | 4 kV | 4 kV | 4 kV |
| Rated insulation voltage | | 500 | 500 | 500 | 500 |
| **Control Commands—Vac/Vdc** | | | | | |
| Supply voltage control board $U_s$ nominal | Vac/Vdc | 20.4–26.4 | 20.4–26.4 | 20.4–26.4 | 20.4–26.4 |
| Current consumption at 24 Vac/Vdc | mA | 1.6 | 1.6 | 1.6 | 1.6 |
| Pick-up voltage | | +17.3–+27 | +17.3–+27 | +17.3–+27 | +17.3–+27 |
| Drop-out voltage | | +3–0 | +3–0 | +3–0 | +3–0 |
| **Relay Outputs** | | | | | |
| Number of relays | | 1 (TOR) | 1 (TOR) | 1 (TOR) | 1 (TOR) |
| Maximum voltage | Vac | 250 | 250 | 250 | 250 |
| Maximum current | A | 1A | 1A | 1A | 1A |
| **Soft Start Functions** | | | | | |
| Ramp times | | | | | |
| Start ramp | s | 1–30 | 1–30 | 1–30 | 1–30 |
| Stop ramp | s | 0–30 | 0–30 | 0–30 | 0–30 |
| Initial voltage % line voltage | | | | | |
| DS7-342… | | 30–92% | 30–92% | 30–92% | 30–92% |
| DS7-340… | | 30–100% | 30–100% | 30–100% | 30–100% |
| DS7-34D… | | 30–92% | 30–92% | 30–92% | 30–92% |
| **Control Commands—Vac** | | | | | |
| Supply voltage control board $U_s$ nominal | Vac | 102–253 | 102–253 | 102–253 | 102–253 |
| Current consumption at 24 Vac/Vdc | mA | 4 | 4 | 4 | 4 |
| Pick-up voltage | Vac | 102–230 | 102–230 | 102–230 | 102–230 |
| Drop-out voltage | Vac | 0–28 | 0–28 | 0–28 | 0–28 |
| **Relay Outputs** | | | | | |
| Number of relays | | 1 (TOR) | 1 (TOR) | 1 (TOR) | 1 (TOR) |
| Maximum voltage | Vac | 250 | 250 | 250 | 250 |
| Maximum current | A | 3A | 3A | 3A | 3A |
| **Soft Start Functions** | | | | | |
| Ramp times | | | | | |
| Start ramp | s | 1–30 | 1–30 | 1–30 | 1–30 |
| Stop ramp | s | 0–30 | 0–30 | 0–30 | 0–30 |
| Initial voltage % line voltage | | 30–92% | 30–92% | 30–92% | 30–92% |

## DS7 Soft Start Controllers, continued

**Rated Control Circuit**

| Voltage 24 Vac/Vdc<br>Voltage 110/230 Vac<br>Voltage 24 Vdc | Unit | DS7-340SX016N0-N<br>DS7-342SX016N0-N<br>DS7-34DSX016N0-D | DS7-340SX024N0-N<br>DS7-342SX024N0-N<br>DS7-34DSX024N0-D | DS7-340SX032N0-N<br>DS7-342SX032N0-N<br>DS7-34DSX032N0-D |
|---|---|---|---|---|
| **General** | | | | |
| Standards | | IEC/EN 60947-4-2; GB14048.6; UL508; CSA-C22.2 No 0-M91; CSA-C22.2 No 14-05 CE marking | IEC/EN 60947-4-2; GB14048.6; UL508; CSA-C22.2 No 0-M91; CSA-C22.2 No 14-05 CE marking | IEC/EN 60947-4-2; GB14048.6; UL508; CSA-C22.2 No 0-M91; CSA-C22.2 No 14-05 CE marking |
| Certifications/marking | | UL/CE/CSA/C-Tick | UL/CE/CSA/C-Tick | UL/CE/CSA/C-Tick |
| Ambient temperature (operation) | °C | 0 to 40°C, above 40°C de-rate linearly by 1% of rated current per Celsius to 60°C | 0 to 40°C, above 40°C de-rate linearly by 1% of rated current per Celsius to 60°C | 0 to 40°C, above 40°C de-rate linearly by 1% of rated current per Celsius to 60°C |
| Ambient temperature (storage) | °C | –25 to 55°C | –25 to 55°C | –25 to 55°C |
| Altitude | | 0–1000m, above 1000m de-rate linearly by 2.5% of rated current per 100m to a maximum of 2000m | 0–1000m, above 1000m de-rate linearly by 2.5% of rated current per 100m to a maximum of 2000m | 0–1000m, above 1000m de-rate linearly by 2.5% of rated current per 100m to a maximum of 2000m |
| Installation | | Vertical | Vertical | Vertical |
| Protection class | | IP20 | IP20 | IP20 |
| Protection class applies to the front and operator control and display elements. Protection type from all sides is IP00. | | With optional covers from the NZM range, protection type IP40 from all sides can be achieved | With optional covers from the NZM range, protection type IP40 from all sides can be achieved | With optional covers from the NZM range, protection type IP40 from all sides can be achieved |
| Busbar tag shroud | | Back of hand and finger-proof (from front face) | Back of hand and finger-proof (from front face) | Back of hand and finger-proof (from front face) |
| Overvoltage category/ pollution degree | | II/2 | II/2 | II/2 |
| Shock resistance | | 8g/11ms | 8g/11ms | 8g/11ms |
| Vibration resistance according to EN 60721-3-2 | | 2M2 | 2M2 | 2M2 |
| Mean heat dissipation at rated duty cycle | W | 0.8 | 1.1 | 1.5 |
| Radio interference | | B | B | B |
| Dimensions (W x H x D) | | | | |
| DS7-340… and DS7-342… | in (mm) | 1.77 x 5.91 x 4.65 (45 x 150 x 118) | 1.77 x 5.91 x 4.65 (45 x 150 x 118) | 1.77 x 5.91 x 4.65 (45 x 150 x 118) |
| DS7-34D… | in (mm) | 1.77 x 5.91 x 4.65 (45 x 150 x 118) | 1.77 x 5.91 x 4.65 (45 x 150 x 118) | 1.77 x 5.91 x 4.65 (45 x 150 x 118) |
| Weight | | | | |
| DS7-340… | lb (kg) | 0.88 (0.40) | 0.88 (0.40) | 0.88 (0.40) |
| DS7-342… | lb (kg) | 0.99 (0.45) | 0.99 (0.45) | 0.99 (0.45) |
| DS7-34D… | lb (kg) | 0.90 (0.41) | 0.90 (0.41) | 0.90 (0.41) |
| **Main Circuit** | | | | |
| Rated operational voltage | V | 230–460 Vac | 230–460 Vac | 230–460 Vac |
| Mains frequency | Hz | 50/60 Hz | 50/60 Hz | 50/60 Hz |
| Rated operation current AC 53 | $I_e$ | 16 | 24 | 32 |
| **Motor Power Ratings** | | | | |
| 200V | hp | 3 | 5 | 10 |
| 230V | hp | 5 | 7.5 | 10 |
| 480V | hp | 10 | 15 | 25 |
| 230V | kW | 4 | 5.5 | 7.5 |
| 400V | kW | 7.5 | 11 | 15 |
| Overload cycle according to EN 60947-4-2 | | 16A: AC53a; 3-5; 75-10 | 24A: AC53a; 3-5; 75-10 | 32A: AC53a; 3-5; 75-10 |

## DS7 Soft Start Controllers, continued

**Rated Control Circuit**

| **Voltage 24 Vac/Vdc**<br>**Voltage 110/230 Vac**<br>**Voltage 24 Vdc** | **Unit** | **DS7-340SX016N0-N**<br>**DS7-342SX016N0-N**<br>**DS7-34DSX016N0-D** | **DS7-340SX024N0-N**<br>**DS7-342SX024N0-N**<br>**DS7-34DSX024N0-D** | **DS7-340SX032N0-N**<br>**DS7-342SX032N0-N**<br>**DS7-34DSX032N0-D** |
|---|---|---|---|---|
| **Wire Specifications** | | | | |
| Power terminals | | | | |
| Single conductor—solid or stranded | AWG | 18–6 | 18–6 | 18–6 |
| Terminal torque | lb-in | 11 | 11 | 11 |
| Control Signals | | | | |
| Single conductor—solid or stranded | AWG | 18–10 | 18–10 | 18–10 |
| Terminal torque | lb-in | 11 | 11 | 11 |
| **Power Section** | | | | |
| Rated impulse withstand voltage | $U_{imp}$ 1.2/ 50_s | 4 kV | 4 kV | 4 kV |
| Rated insulation voltage | | 500 | 500 | 500 |
| **Control Commands—Vac/Vdc** | | | | |
| Supply voltage control board $U_s$ nominal | Vac/Vdc | 20.4–26.4 | 20.4–26.4 | 20.4–26.4 |
| Current consumption at 24 Vac/Vdc | mA | 1.6 | 1.6 | 1.6 |
| Pick-up voltage | | +17.3–+27 | +17.3–+27 | +17.3–+27 |
| Drop-out voltage | | +3–0 | +3–0 | +3–0 |
| **Relay Outputs** | | | | |
| Number of relays | | 2 (TOR, Ready) | 2 (TOR, Ready) | 2 (TOR, Ready) |
| Maximum voltage | Vac | 250 | 250 | 250 |
| Maximum current | A | 1A | 1A | 1A |
| **Soft Start Functions** | | | | |
| Ramp times | | | | |
| Start ramp | s | 1–30 | 1–30 | 1–30 |
| Stop ramp | s | 0–30 | 0–30 | 0–30 |
| Initial voltage % line voltage | | | | |
| DS7-342… | | 30–92% | 30–92% | 30–92% |
| DS7-340… | | 30–100% | 30–100% | 30–100% |
| DS7-34D… | | 30–92% | 30–92% | 30–92% |
| **Control Commands—Vac** | | | | |
| Supply voltage control board $U_s$ nominal | Vac | 102–253 | 102–253 | 102–253 |
| Current consumption at 102–253 Vac | mA | 4 | 4 | 4 |
| Pick-up voltage | Vac | 102–230 | 102–230 | 102–230 |
| Drop-out voltage | Vac | 0–28 | 0–28 | 0–28 |
| **Relay Outputs** | | | | |
| Number of relays | | 2 (TOR, Run) | 2 (TOR, Run) | 2 (TOR, Run) |
| Maximum voltage | Vac | 250 | 250 | 250 |
| Maximum current | A | 3A | 3A | 3A |
| **Soft Start Functions** | | | | |
| Ramp times | | | | |
| Start ramp | s | 1–30 | 1–30 | 1–30 |
| Stop ramp | s | 0–30 | 0–30 | 0–30 |
| Initial voltage % line voltage | | 30–92% | 30–92% | 30–92% |

## DS7 Soft Start Controllers, continued

**Rated Control Circuit**

| Voltage 24 Vac/Vdc<br>Voltage 110/230 Vac<br>Voltage 24 Vdc | Unit | DS7-340SX041N0-N<br>DS7-342SX041N0-N<br>DS7-34DSX041N0-D | DS7-340SX055N0-N<br>DS7-342SX055N0-N<br>DS7-34DSX055N0-D | DS7-340SX070N0-N<br>DS7-342SX070N0-N<br>DS7-34DSX070N0-D | DS7-340SX081N0-N<br>DS7-342SX081N0-N<br>DS7-34DSX081N0-D |
|---|---|---|---|---|---|
| **General** | | | | | |
| Standards | | IEC/EN 60947-4-2; GB14048.6; UL508; CSA-C22.2 No 0-M91; CSA-C22.2 No 14-05 CE marking | IEC/EN 60947-4-2; GB14048.6; UL508; CSA-C22.2 No 0-M91; CSA-C22.2 No 14-05 CE marking | IEC/EN 60947-4-2; GB14048.6; UL508; CSA-C22.2 No 0-M91; CSA-C22.2 No 14-05 CE marking | IEC/EN 60947-4-2; GB14048.6; UL508; CSA-C22.2 No 0-M91; CSA-C22.2 No 14-05 CE marking |
| Certifications/marking | | UL/CE/CSA/C-Tick | UL/CE/CSA/C-Tick | UL/CE/CSA/C-Tick | UL/CE/CSA/C-Tick |
| Ambient temperature (operation) | °C | 0 to 40°C, above 40°C de-rate linearly by 1% of rated current per Celsius to 60°C | 0 to 40°C, above 40°C de-rate linearly by 1% of rated current per Celsius to 60°C | 0 to 40°C, above 40°C de-rate linearly by 1% of rated current per Celsius to 60°C | 0 to 40°C, above 40°C de-rate linearly by 1% of rated current per Celsius to 60°C |
| Ambient temperature (storage) | °C | –25 to 55°C | –25 to 55°C | –25 to 55°C | –25 to 55°C |
| Altitude | | 0–1000m, above 1000m de-rate linearly by 2.5% of rated current per 100m to a maximum of 2000m | 0–1000m, above 1000m de-rate linearly by 2.5% of rated current per 100m to a maximum of 2000m | 0–1000m, above 1000m de-rate linearly by 2.5% of rated current per 100m to a maximum of 2000m | 0–1000m, above 1000m de-rate linearly by 2.5% of rated current per 100m to a maximum of 2000m |
| Installation | | Vertical | Vertical | Vertical | Vertical |
| Protection class | | IP20 | IP20 | IP20 | IP20 |
| Protection class applies to the front and operator control and display elements. Protection type from all sides is IP00. | | With optional covers from the NZM range, protection type IP40 from all sides can be achieved | With optional covers from the NZM range, protection type IP40 from all sides can be achieved | With optional covers from the NZM range, protection type IP40 from all sides can be achieved | With optional covers from the NZM range, protection type IP40 from all sides can be achieved |
| Busbar tag shroud | | Back of hand and finger-proof (from front face) | Back of hand and finger-proof (from front face) | Back of hand and finger-proof (from front face) | Back of hand and finger-proof (from front face) |
| Overvoltage category/ pollution degree | | II/2 | II/2 | II/2 | II/2 |
| Shock resistance | | 8g/11ms | 8g/11ms | 8g/11ms | 8g/11ms |
| Vibration resistance according to EN 60721-3-2 | | 2M2 | 2M2 | 2M2 | 2M2 |
| Mean heat dissipation at rated duty cycle | W | 7 | 10 | 13 | 18 |
| Radio interference | | B | B | B | B |
| Dimensions (W x H x D) | | | | | |
| DS7-340…, DS7-342… and DS7-34D… | in (mm) | 3.66 x 6.89 x 5.47 (93 x 175 x 139) | 3.66 x 6.89 x 5.47 (93 x 175 x 139) | 3.66 x 6.89 x 5.47 (93 x 175 x 139) | 3.66 x 6.89 x 5.47 (93 x 175 x 139) |
| Weight | | | | | |
| DS7-340…, DS7-342… and DS7-34D… | lb (kg) | 3.97 (1.8) | 3.97 (1.8) | 3.97 (1.8) | 3.97 (1.8) |
| **Main Circuit** | | | | | |
| Rated operational voltage | V | 230–460 Vac | 230–460 Vac | 230–460 Vac | 230–460 Vac |
| Mains frequency | Hz | 50/60 Hz | 50/60 Hz | 50/60 Hz | 50/60 Hz |
| Rated operation current AC 53 | $I_e$ | 41 | 55 | 70 | 81 |
| **Motor Power Ratings** | | | | | |
| 200V | hp | 10 | 15 | 20 | 25 |
| 230V | hp | 10 | 20 | 25 | 30 |
| 480V | hp | 30 | 40 | 50 | 60 |
| 230V | kW | 11 | 15 | 15 | 22 |
| 400V | kW | 22 | 30 | 37 | 45 |
| Overload cycle according to EN 60947-4-2 | | 41A: AC53a; 3-5; 75-10 | 55A: AC53a; 3-5; 75-10 | 70A: AC53a; 3-5; 75-10 | 81A: AC53a; 3-5; 75-10 |

## DS7 Soft Start Controllers, continued

**Rated Control Circuit**

| Voltage 24 Vac/Vdc<br>Voltage 110/230 Vac<br>Voltage 24 Vdc | Unit | DS7-340SX041N0-N<br>DS7-342SX041N0-N<br>DS7-34DSX041N0-D | DS7-340SX055N0-N<br>DS7-342SX055N0-N<br>DS7-34DSX055N0-D | DS7-340SX070N0-N<br>DS7-342SX070N0-N<br>DS7-34DSX070N0-D | DS7-340SX081N0-N<br>DS7-342SX081N0-N<br>DS7-34DSX081N0-D |
|---|---|---|---|---|---|
| **Wire Specifications** | | | | | |
| Power terminals | | | | | |
| Single conductor—solid or stranded | AWG | 12–2/0 | 12–2/0 | 12–2/0 | 12–2/0 |
| Terminal torque | lb-in | 53–80 | 53–80 | 53–80 | 53–80 |
| Control signals | | | | | |
| Single conductor—solid or stranded | AWG | 18–10 | 18–10 | 18–10 | 18–10 |
| Terminal torque | lb-in | 11 | 11 | 11 | 11 |
| **Power Section** | | | | | |
| Rated impulse withstand voltage | $U_{imp}$ 1.2/ 50_s | 4 kV | 4 kV | 4 kV | 4 kV |
| Rated insulation voltage | | 500 | 500 | 500 | 500 |
| **Control Commands—24 Vac/Vdc** | | | | | |
| Supply voltage control board $U_s$ nominal | Vac/Vdc | 20.4–26.4 | 20.4–26.4 | 20.4–26.4 | 20.4–26.4 |
| Current consumption at 24 Vac/Vdc | mA | 65 | 65 | 65 | 65 |
| Pick-up voltage | | +17.3–+27 | +17.3–+27 | +17.3–+27 | +17.3–+27 |
| Drop-out voltage | | +3–0 | +3–0 | +3–0 | +3–0 |
| **Relay Outputs** | | | | | |
| Number of relays | | 2 (TOR) | 2 (TOR) | 2 (TOR) | 2 (TOR) |
| Maximum voltage | Vac | 250 | 250 | 250 | 250 |
| Maximum current | A | 1A | 1A | 1A | 1A |
| **Soft Start Functions** | | | | | |
| Ramp times | | | | | |
| Start ramp | s | 1–30 | 1–30 | 1–30 | 1–30 |
| Stop ramp | s | 0–30 | 0–30 | 0–30 | 0–30 |
| Initial voltage % line voltage | | | | | |
| DS7-342… | | 30–92% | 30–92% | 30–92% | 30–92% |
| DS7-340… | | 30–100% | 30–100% | 30–100% | 30–100% |
| DS7-34D… | | 30–92% | 30–92% | 30–92% | 30–92% |
| **Control Commands—110–230 Vac** | | | | | |
| Supply voltage control board $U_s$ nominal | Vac | 102–253 | 102–253 | 102–253 | 102–253 |
| Current consumption at 24 Vac/Vdc | mA | 14 | 14 | 14 | 14 |
| Pick-up voltage | Vac | 102–230 | 102–230 | 102–230 | 102–230 |
| Drop-out voltage | Vac | 0–28 | 0–28 | 0–28 | 0–28 |
| **Relay Outputs** | | | | | |
| Number of relays | | 2 (TOR) | 2 (TOR) | 2 (TOR) | 2 (TOR) |
| Maximum voltage | Vac | 250 | 250 | 250 | 250 |
| Maximum current | A | 3A | 3A | 3A | 3A |
| **Soft Start Functions** | | | | | |
| Ramp times | | | | | |
| Start ramp | s | 1–30 | 1–30 | 1–30 | 1–30 |
| Stop ramp | s | 0–30 | 0–30 | 0–30 | 0–30 |
| Initial voltage % line voltage | | 30–92% | 30–92% | 30–92% | 30–92% |

## DS7 Soft Start Controllers, continued

**Rated Control Circuit**

| Voltage 24 Vac/Vdc<br>Voltage 110/230 Vac<br>Voltage 24 Vdc | Unit | DS7-340SX100N0-N<br>DS7-342SX100N0-N<br>DS7-34DSX100N0-D | DS7-340SX135N0-N<br>DS7-342SX135N0-N<br>DS7-34DSX135N0-D | DS7-340SX160N0-N<br>DS7-342SX160N0-N<br>DS7-34DSX160N0-D | DS7-340SX200N0-N<br>DS7-342SX200N0-N<br>DS7-34DSX200N0-D |
|---|---|---|---|---|---|
| **General** | | | | | |
| Standards | | IEC/EN 60947-4-2; GB14048.6; UL508; CSA-C22.2 No 0-M91; CSA-C22.2 No 14-05 CE marking | IEC/EN 60947-4-2; GB14048.6; UL508; CSA-C22.2 No 0-M91; CSA-C22.2 No 14-05 CE marking | IEC/EN 60947-4-2; GB14048.6; UL508; CSA-C22.2 No 0-M91; CSA-C22.2 No 14-05 CE marking | IEC/EN 60947-4-2; GB14048.6; UL508; CSA-C22.2 No 0-M91; CSA-C22.2 No 14-05 CE marking |
| Certifications/marking | | UL/CE/CSA/C-Tick | UL/CE/CSA/C-Tick | UL/CE/CSA/C-Tick | UL/CE/CSA/C-Tick |
| Ambient temperature (operation) | °C | 0 to 40°C, above 40°C de-rate linearly by 1% of rated current per Celsius to 60°C | 0 to 40°C, above 40°C de-rate linearly by 1% of rated current per Celsius to 60°C | 0 to 40°C, above 40°C de-rate linearly by 1% of rated current per Celsius to 60°C | 0 to 40°C, above 40°C de-rate linearly by 1% of rated current per Celsius to 60°C |
| Ambient temperature (storage) | °C | –25 to 55°C | –25 to 55°C | –25 to 55°C | –25 to 55°C |
| Altitude | | 0–1000m, above 1000m de-rate linearly by 2.5% of rated current per 100m to a maximum of 2000m | 0–1000m, above 1000m de-rate linearly by 2.5% of rated current per 100m to a maximum of 2000m | 0–1000m, above 1000m de-rate linearly by 2.5% of rated current per 100m to a maximum of 2000m | 0–1000m, above 1000m de-rate linearly by 2.5% of rated current per 100m to a maximum of 2000m |
| Installation | | Vertical | Vertical | Vertical | Vertical |
| Protection class | | IP20 | IP20 | IP20 | IP20 |
| Protection class applies to the front and operator control and display elements. Protection type from all sides is IP00. | | With optional covers from the NZM range, protection type IP40 from all sides can be achieved | With optional covers from the NZM range, protection type IP40 from all sides can be achieved | With optional covers from the NZM range, protection type IP40 from all sides can be achieved | With optional covers from the NZM range, protection type IP40 from all sides can be achieved |
| Busbar tag shroud | | Back of hand and finger-proof (from front face) | Back of hand and finger-proof (from front face) | Back of hand and finger-proof (from front face) | Back of hand and finger-proof (from front face) |
| Overvoltage category/ pollution degree | | II/2 | II/2 | II/2 | II/2 |
| Shock resistance | | 8g/11ms | 8g/11ms | 8g/11ms | 8g/11ms |
| Vibration resistance according to EN 60721-3-2 | | 2M2 | 2M2 | 2M2 | 2M2 |
| Mean heat dissipation at rated duty cycle | W | 25 | 24 | 30 | 42 |
| Radio interference | | B | B | B | B |
| Dimensions (W x H x D) | | | | | |
| DS7-340…, DS7-342… and DS7-34D… | in (mm) | 3.66 x 6.89 x 5.47 (93 x 175 x 139) | 4.25 x 8.46 x 7.01 (108 x 215 x 178) | 4.25 x 8.46 x 7.01 (108 x 215 x 178) | 4.25 x 8.46 x 7.01 (108 x 215 x 178) |
| Weight | | | | | |
| DS7-340…, DS7-342… and DS7-34D… | lb (kg) | 3.97 (1.8) | 8.16 (3.7) | 8.16 (3.7) | 8.16 (3.7) |
| **Main Circuit** | | | | | |
| Rated operational voltage | V | 230–460 Vac | 230–460 Vac | 230–460 Vac | 230–460 Vac |
| Mains frequency | Hz | 50/60 Hz | 50/60 Hz | 50/60 Hz | 50/60 Hz |
| Rated operation current AC 53 | $I_e$ | 100 | 135 | 160 | 200 |
| **Motor Power Ratings** | | | | | |
| 200V | hp | 30 | 40 | 50 | 60 |
| 230V | hp | 30 | 50 | 60 | 75 |
| 480V | hp | 75 | 100 | 125 | 150 |
| 230V | kW | 30 | 30 | 45 | 55 |
| 400V | kW | 55 | 75 | 90 | 110 |
| Overload cycle according to EN 60947-4-2 | | 100A: AC53a; 3-5; 75-10 | 135A: AC53a; 3-5; 75-10 | 160A: AC53a; 3-5; 75-10 | 200A: AC53a; 3-5; 75-10 |

## DS7 Soft Start Controllers, continued

**Rated Control Circuit**

| Voltage 24 Vac/Vdc<br>Voltage 110/230 Vac<br>Voltage 24 Vdc | Unit | DS7-340SX100N0-N<br>DS7-342SX100N0-N<br>DS7-34DSX100N0-D | DS7-340SX135N0-N<br>DS7-342SX135N0-N<br>DS7-34DSX135N0-D | DS7-340SX160N0-N<br>DS7-342SX160N0-N<br>DS7-34DSX160N0-D | DS7-340SX200N0-N<br>DS7-342SX200N0-N<br>DS7-34DSX200N0-D |
|---|---|---|---|---|---|
| **Wire Specifications** | | | | | |
| Power terminals | | | | | |
| Single conductor—solid or stranded | AWG | 12–2/0 | 12–350 kcmil | 12–350 kcmil | 12–350 kcmil |
| Terminal torque | lb-in | 53–80 | 44–123 | 44–123 | 44–123 |
| Control signals | | | | | |
| Single conductor—solid or stranded | AWG | 18–10 | 18–10 | 18–10 | 18–10 |
| Terminal torque | lb-in | 11 | 11 | 11 | 11 |
| **Power Section** | | | | | |
| Rated impulse withstand voltage | $U_{imp}$ 1.2/ 50_s | 4 kV | 4 kV | 4 kV | 4 kV |
| Rated insulation voltage | | 500 | 500 | 500 | 500 |
| **Control Commands—24 Vac/Vdc** | | | | | |
| Supply voltage control board $U_s$ nominal | Vac/Vdc | 20.4–26.4 | 20.4–26.4 | 20.4–26.4 | 20.4–26.4 |
| Current consumption at 24 Vac/Vdc | mA | 65 | 65 | 65 | 65 |
| Pick-up voltage | | +17.3–+27 | +17.3–+27 | +17.3–+27 | +17.3–+27 |
| Drop-out voltage | | +3–0 | +3–0 | +3–0 | +3–0 |
| **Relay Outputs** | | | | | |
| Number of relays | | 2 (TOR) | 2 (TOR) | 2 (TOR) | 2 (TOR) |
| Maximum voltage | Vac | 250 | 250 | 250 | 250 |
| Maximum current | A | 1A | 1A | 1A | 1A |
| **Soft Start Functions** | | | | | |
| Ramp times | | | | | |
| Start ramp | s | 1–30 | 1–30 | 1–30 | 1–30 |
| Stop ramp | s | 0–30 | 0–30 | 0–30 | 0–30 |
| Initial voltage % line voltage | | | | | |
| DS7-342… | | 30–92% | 30–92% | 30–92% | 30–92% |
| DS7-340… | | 30–100% | 30–100% | 30–100% | 30–100% |
| DS7-34D… | | 30–92% | 30–92% | 30–92% | 30–92% |
| **Control Commands—110–230 Vac** | | | | | |
| Supply voltage control board $U_s$ nominal | Vac | 102–253 | 102–253 | 102–253 | 102–253 |
| Current consumption at 24 Vac/Vdc | mA | 14 | 14 | 14 | 14 |
| Pick-up voltage | Vac | 102–230 | 102–230 | 102–230 | 102–230 |
| Drop-out voltage | Vac | 0–28 | 0–28 | 0–28 | 0–28 |
| **Relay Outputs** | | | | | |
| Number of relays | | 2 (TOR) | 2 (TOR) | 2 (TOR) | 2 (TOR) |
| Maximum voltage | Vac | 250 | 250 | 250 | 250 |
| Maximum current | A | 3A | 3A | 3A | 3A |
| **Soft Start Functions** | | | | | |
| Ramp times | | | | | |
| Start ramp | s | 1–30 | 1–30 | 1–30 | 1–30 |
| Stop ramp | s | 0–30 | 0–30 | 0–30 | 0–30 |
| Initial voltage % line voltage | | 30–92% | 30–92% | 30–92% | 30–92% |

1

## Dimensions

Approximate Dimensions in Inches (mm)

### Frame 1

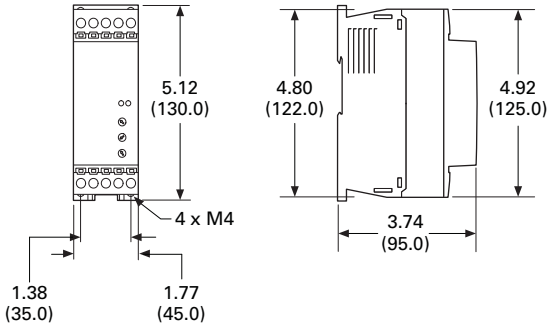


**Catalog Numbers**

| | |
|---|---|
| DS7-340SX004N0-N | DS7-342SX004N0-N |
| DS7-340SX007N0-N | DS7-342SX007N0-N |
| DS7-340SX009N0-N | DS7-342SX009N0-N |
| DS7-340SX012N0-N | DS7-342SX012N0-N |

### Frame 2

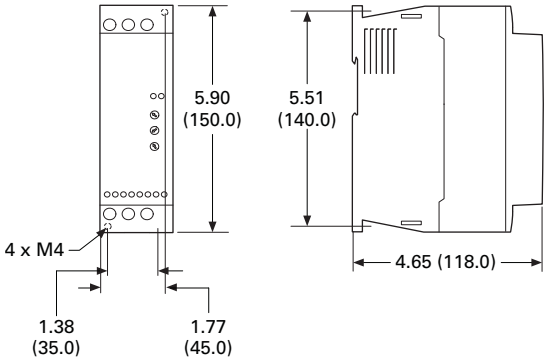


**Catalog Numbers**

| | |
|---|---|
| DS7-340SX016N0-N | DS7-342SX016N0-N |
| DS7-340SX024N0-N | DS7-342SX024N0-N |
| DS7-340SX032N0-N | DS7-342SX032N0-N |

### Frame 1—SmartWire-DT

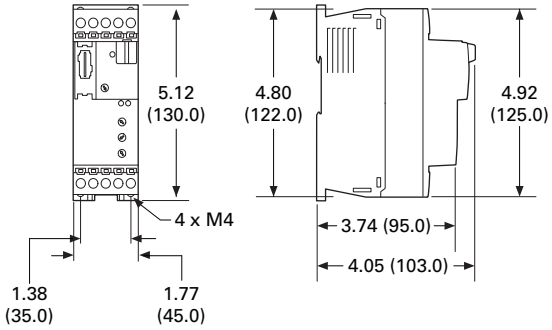


**Catalog Numbers**

| | |
|---|---|
| DS7-34DSX004N0-D | DS7-34DSX009N0-D |
| DS7-34DSX007N0-D | DS7-34DSX012N0-D |

### Frame 2—SmartWire-DT

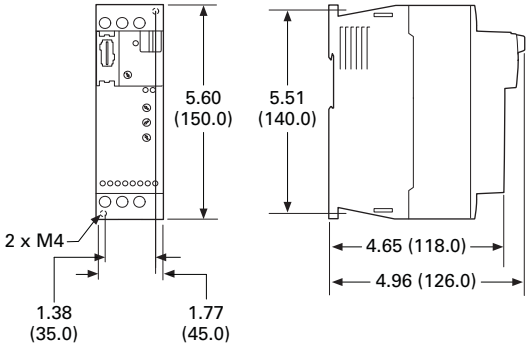


**Catalog Numbers**

| |
|---|
| DS7-34DSX016N0-D |
| DS7-34DSX024N0-D |
| DS7-34DSX032N0-D |

## Frame 3—SmartWire-DT and Standard (Non SmartWire-DT)

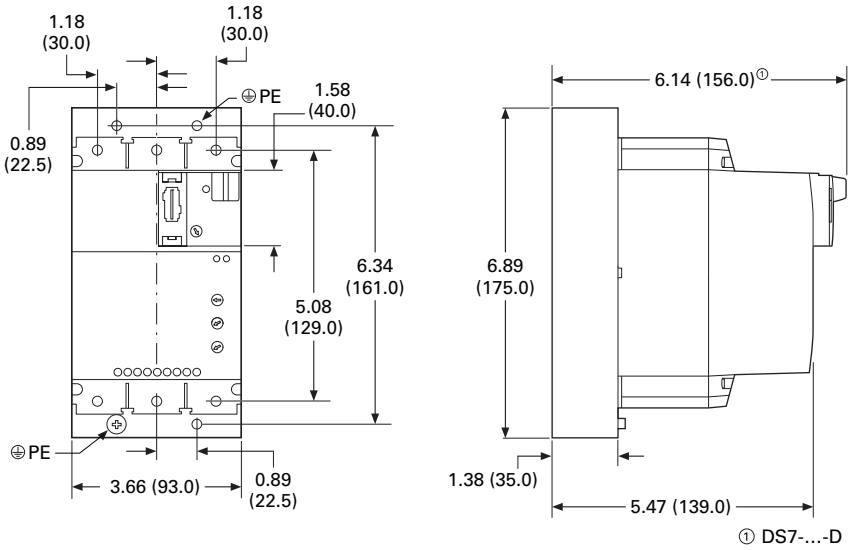


**Catalog Numbers**

| | | |
|---|---|---|
| DS7-340SX041N0-N | DS7-342SX041N0-N | DS7-34DSX041N0-D |
| DS7-340SX055N0-N | DS7-342SX055N0-N | DS7-34DSX055N0-D |
| DS7-340SX070N0-N | DS7-342SX070N0-N | DS7-34DSX070N0-D |
| DS7-340SX081N0-N | DS7-342SX081N0-N | DS7-34DSX081N0-D |
| DS7-340SX100N0-N | DS7-342SX100N0-N | DS7-34DSX100N0-D |

## Frame 4—SmartWire-DT and Standard (Non SmartWire-DT)

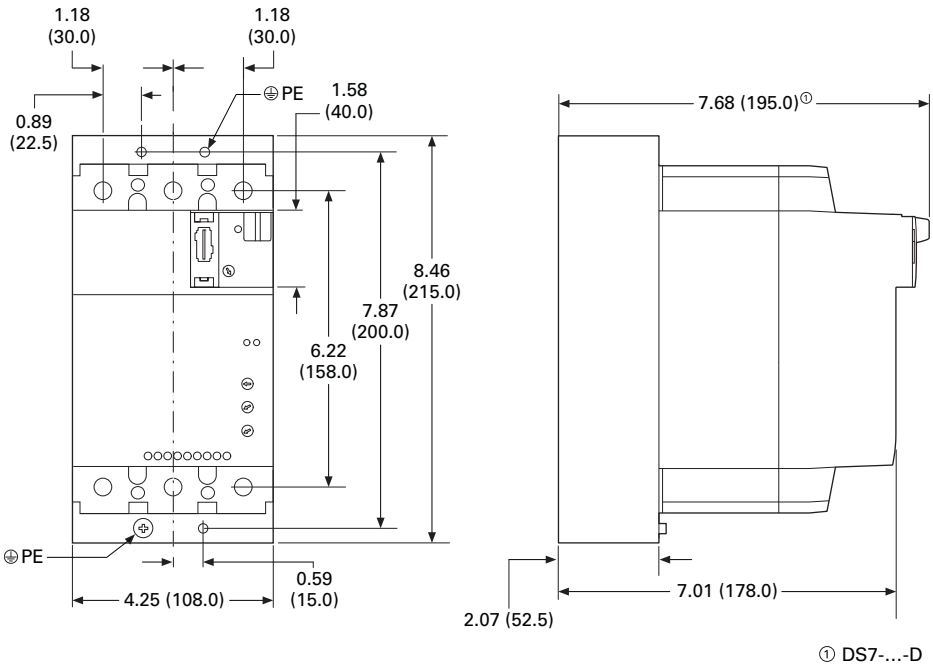


**Catalog Numbers**

| | | |
|---|---|---|
| DS7-342SX135N0-N | DS7-340SX135N0-N | DS7-34DSX135N0-D |
| DS7-342SX160N0-N | DS7-340SX160N0-N | DS7-34DSX160N0-D |
| DS7-342SX200N0-N | DS7-340SX200N0-N | DS7-34DSX200N0-D |

**Solid-State Starters**

## Contents


| *Description* | *Page* |
|---|---|
| Solid-State Starters | |
| Type S611, Solid-State Soft Starters | **V6-T1-43** |
| Type S801+, Soft Starters | **V6-T1-60** |
| Type S811+, Soft Starters with DIM | **V6-T1-76** |


## Product Overview

### Type S611

The S611 soft starter is a powerful combination of performance capability, application flexibility, and the industry's best user interface experience.

Designed to control acceleration and deceleration of three-phase motors, the line is available for current ranges from 26A through 414A applications.

The S611 has integrated bypass and overload protection. The S611 is available as a component for panel mounting or in enclosed control—NEMA Type 1, 12, 3R, 4, 4X.

### Type S801+

Eaton's S801+ line of reduced voltage soft starters is very compact, multi-functional, easy to install and easy to program. Designed to control acceleration and deceleration of three-phase motors, the line is available for current ranges from 11A to 1000A applications, and is suitable for mounting in motor control centers or in enclosed control (NEMA Type 1, 4, 4X and 12) applications.

### Type S811+

Eaton's S811+ offers all the popular features of the S801+ and adds enhanced functionality with the new DIM (Digital Interface Module), communications, metering, monitoring and diagnostics capabilities.

Eaton's line of S811+ reduced voltage soft starters is very compact, multi-functional, easy to install and easy to set operating parameters. Designed to control the acceleration and deceleration of three-phase motors up to 690V, the line is available from 11A to 1000A.

The S811+ is designed to be a complete package, combining the silicon controlled rectifiers (SCRs), bypass contactor and overload in one, very compact unit. The S811+ is available as a component for panel mounting, in motor control centers or in enclosed control (NEMA Type 1, 3R, 4, 4X, 7/9 and 12).

Type S611, Solid-State Soft Starter

## Contents


| *Description* | *Page* |
|---|---|
| Type S611, Solid-State Soft Starters | |
| Communications | **V6-T1-44** |
| Operation | **V6-T1-45** |
| Features and Benefits | **V6-T1-48** |
| Standards and Certifications | **V6-T1-51** |
| Instructional Leaflets | **V6-T1-51** |
| Catalog Number Selection | **V6-T1-51** |
| Product Selection | **V6-T1-52** |
| Accessories | **V6-T1-53** |
| Replacement Parts | **V6-T1-54** |
| Technical Data and Specifications | **V6-T1-55** |
| Dimensions | **V6-T1-58** |
| Type S801+, Soft Starters | **V6-T1-60** |
| Type S811+, Soft Starters with DIM | **V6-T1-76** |


## Type S611, Solid-State Soft Starters

### Product Description

Eaton revolutionized the reduced voltage control marketplace with its advanced feature set and user-friendly user interface module to enhance system performance and reduce commissioning times. The S611 adds enhanced functionality with network communications, metering, monitoring and diagnostics capabilities.

The Eaton line of S611 reduced voltage soft starters is multi-functional, easy to install and easy to program. Designed to control the acceleration and deceleration of three-phase motors up to 600V, the line is available from 26 amps through 414 amps.

The S611 is designed to be a complete package combining the SCRs, bypass contactor and overload in one unit.

### Application Description

Designed to control the acceleration and deceleration of three-phase motors, the S611 soft starter uses Silicon Controlled Rectifiers (SCRs) to control the voltage to soft start and soft stop the motor. After the motor is started, internal run bypass contactors close, resulting in the motor running directly across-the-line. The built-in solid-state overload protects the motor from overload conditions with sophisticated algorithms that model true motor heating, resulting in better motor protection and fewer nuisance trips. Advanced protective and diagnostic features reduce downtime.

A voltage ramp start or current limit start is available. Kick start is available in either starting mode. The soft stop option allows for a ramp stop time that is longer than the coast to stop time. The pump control option provides a smooth transition for starting and stopping a motor and eliminating the "water-hammer" effect that can damage pipes, valves and pumps.

The S611 offers an impressive array of advanced protective features. Not only are the protective features selectable, but many offer variable settings allowing the user to fine tune the soft starter to meet specific system requirements.

The S611 has an easy to use User Interface Module (UI) that allows the user to configure the device and to read system parameters and values. The UI includes an LED display and keypad to scroll through the various parameters. The UI allows the user to modify control parameters, enable or disable protections, set communication variables, monitor system values such as line voltages and currents, and access the fault queue.

### User Interface Module (UI)

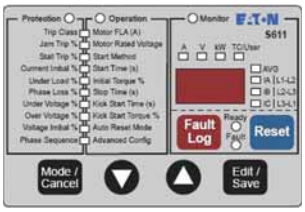


The UI can be removed from the S611 and remote mounted. Kits are available to door mount the UI, enabling users to safely configure, commission, monitor and troubleshoot the system at the electrical panel without opening the enclosure door. This will help eliminate the possibility of an arc flash incident.

## Communications

The S611 has built-in communication capabilities through two communications ports to connect the soft starter to a variety of networks, including Modbus (resident), DeviceNet™, PROFIBUS®, and Ethernet.

The S611 communication parameters can be configured with the UI or through the Fieldbus.

Advanced communication configuration settings provide the system integrator with powerful tools to facilitate system optimization.

### Network Communications Reference

| Description | Catalog Number |
|---|---|
| Modbus communication adapter without I/O | **C441M** |
| Modbus communication adapter with 120 Vac I/O | **C441N** |
| Modbus communication adapter with 24 Vdc I/O | **C441P** |
| DeviceNet communication adapter with 120 Vac I/O | **C441K** |
| DeviceNet communication adapter with 24 Vdc I/O | **C441L** |
| PROFIBUS communication adapter with 120 Vac I/O | **C441S** |
| PROFIBUS communication adapter with 24 Vdc I/O | **C441Q** |
| Ethernet IP/Modbus TCP communication adapter with 120 Vac I/O | **C441R** |
| Ethernet IP/Modbus TCP communication adapter with 24 Vdc I/O | **C441T** |
| Communication adapter | **C440-COM-ADP** |

## Operation

### *Starting and Stopping Modes*

The S611 has a variety of starting and stopping methods to provide superior performance in the most demanding applications. The motor can be started in either Voltage Ramp Start or Current Limit Start mode. Kick Start and Soft Stop are available within both starting modes.

### Voltage Ramp Start

Provides a voltage ramp to the motor resulting in a constant torque increase. The most commonly used form of soft start, this start mode allows you to set the initial torque value and the duration of the ramp to full voltage conditions. Bypass contactors close after ramp time.

- Adjustable initial torque 0–85% of locked rotor torque
- Adjustable ramp time 0.5–180 seconds (can be extended with factory modification)

### Starting Characteristics—Ramp Start

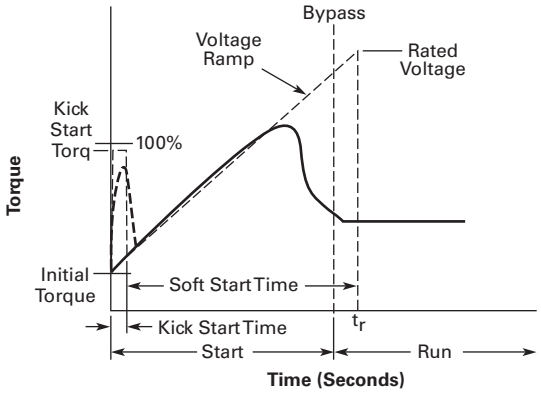


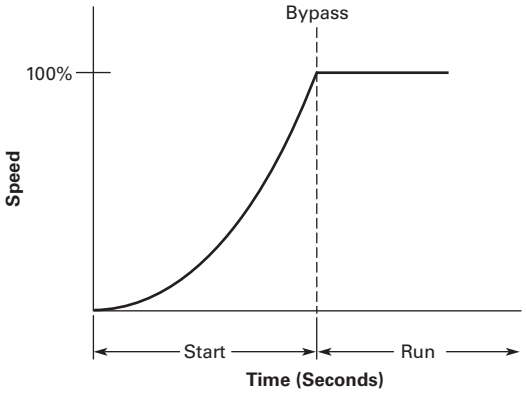


### Current Limit Start

Limits the maximum current available to the motor during the start phase. This mode of soft starting is used when it becomes necessary to limit the maximum starting current due to long start times or to protect the motor. This start mode allows you to set the maximum starting current as a percentage of locked rotor current and the duration of the current limit. Bypass contactors close after current limit time.

- Maximum current of 0–85% locked rotor current
- Adjustable ramp time 0.5–180 seconds (can be extended with factory modification)

### Starting Characteristics—Current Limit Start

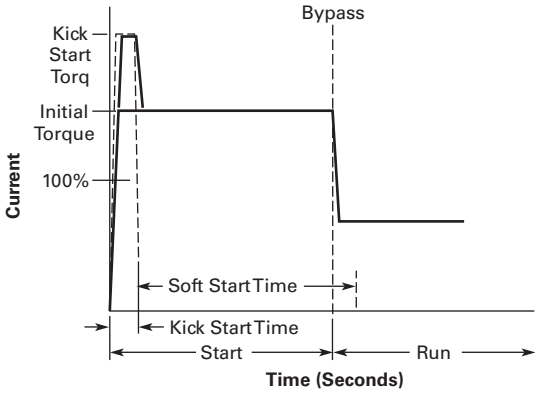


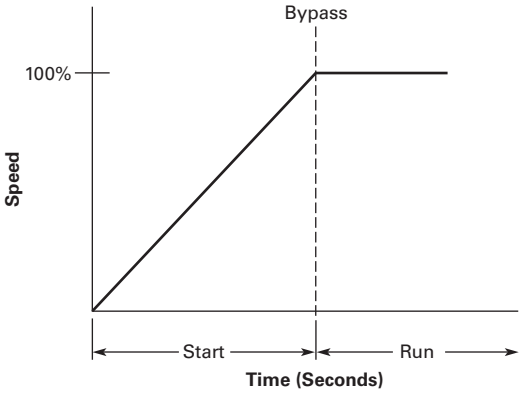

### Kick Start

Selectable feature in both Voltage Ramp Start and Current Limit Start modes. Provides a current and torque "kick" for 0 to 2.0 seconds. This provides greater initial current to develop additional torque to breakaway a high friction load.

- 0–85% of locked rotor torque
- 0–2.0 seconds duration

#### Starting Characteristics—Kick Start

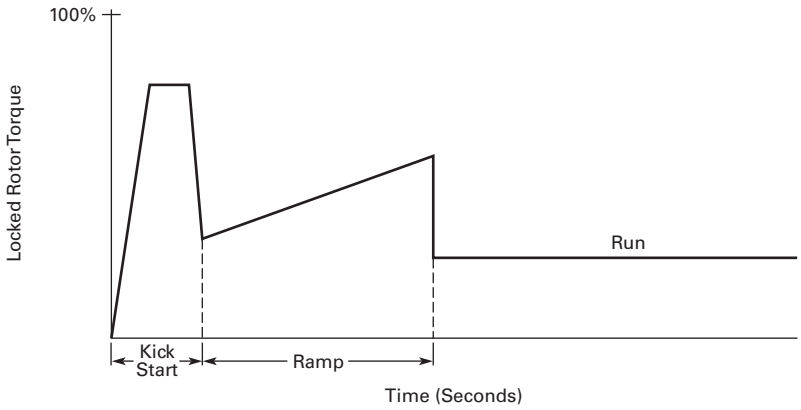


### Soft Stop

Allows for a controlled stopping of a load. Used when a stop-time that is greater than the coast-to-stop time is desired. Often used with high friction loads where a sudden stop may cause system or load damage.

- Stop time = 0–60 seconds

#### Starting Characteristics—Soft Stop

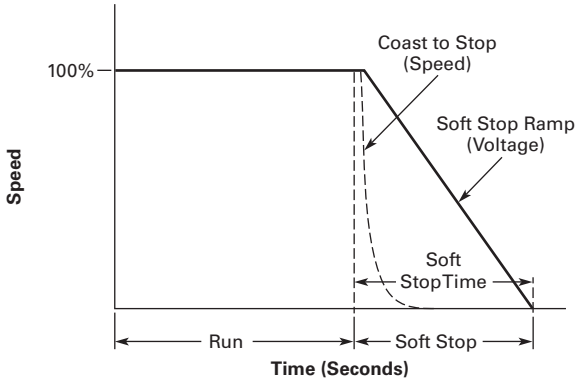

### Pump Control Option

This option is intended to reduce the potential for water hammer in a centrifugal pump system by using a starting and stopping algorithm developed for pump control. Upon a start command, the speed of the motor is increased, under the control of the S611 soft starter microprocessor, to achieve a gentle start. After the speed has reached its nominal value, the bypass contactors close and the pump operates as with any other starter.

Upon a stop command, the bypass contactors are opened and the motor speed is decreased in a tapered manner, to gradually slow the flow until the motor is brought to a stop.

#### Pump Control Option

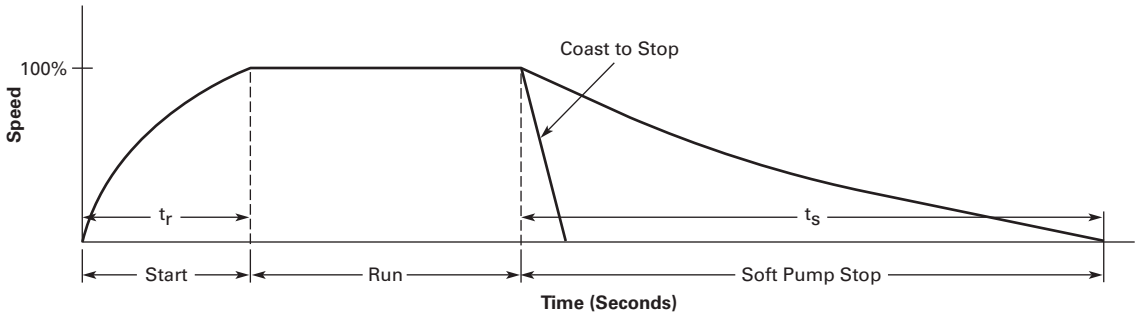


#### *Edge and Level Sensing Control*

Edge or Level Sensing is selected with the Start Control parameter in the Advanced Configuration Menu. Factory default is Level Sensing.

### Edge Sensing

Edge sensing requires 120 Vac power be momentarily applied to the Start terminal (with the Permissive terminal 120 Vac) to initiate a start under all conditions. After a stop or fault occurs, the 120 Vac must be reapplied to the start terminal before another start can occur. This control configuration should be used when restarting of the motor after a fault or stop must be supervised manually or as a part of a control scheme. The cycling of 120 Vac power to the Permissive terminal before starting is required regardless of the position of the auto reset parameter.

### Level Sensing

Level sensing will enable a motor to restart after a fault is cleared without cycling 120V AC to the Permissive terminal as long as:

- Permissive terminal is supplied with 120 Vac
- The auto reset parameter is set to enabled
- All faults have cleared or have been reset

This control configuration should be used where it is desirable to restart a motor after a fault without additional manual or automatic control. An example of this condition would be on a remote pumping station where it is desirable to automatically restart a pump after a power outage without operator intervention.

**Note:** If the auto reset feature is used, CAUTION must be exercised to assure that any restart occurs in a safe manner.

1

## Features and Benefits

- The User Interface Module (UI) provides an intuitive, easy-to-use human interface with powerful configuration capabilities to maximize system performance
- Door or device mounted UI enables users to safely configure, commission, monitor and troubleshoot the system at the electrical panel without opening the enclosure door, eliminating the possibility of an arc flash incident
- System operating parameters can be monitored enterprise-wide through a communications network. Increase uptime by providing data for process management and preventive diagnostics
- Run bypass mode greatly reduces internal heating created by the greater power dissipation in the SCRs. Bypass contactors directly connect the motor to the line and improves system efficiency by reducing internal power losses
- Internal solid-state overload protection provides accurate current measurement and trip settings. Sophisticated algorithms solve a series of differential equations that model true motor heating and cooling, resulting in superior motor overload protection while minimizing nuisance trips. Advanced selectable protective features safeguard the motor and system against a variety of system faults
- Internal run bypass contactors and overload protection eliminate the need for additional devices, reducing enclosure sizes minimizing installation and wiring time and reducing overall assembly size and cost
- Wide range of overload FLA settings (50–100% of rated frame current) and a selectable trip class (5–30) offers users the flexibility to fine tune the starter to match specific application requirements
- Variable ramp times and torque control settings provide unlimited starting configurations, allowing for maximum application flexibility
- Kick-start feature enables soft starting of high friction loads
- Soft stop control for applications where an abrupt stop of the load is not acceptable
- Pump control option with sophisticated pump algorithms on both starting and stopping that minimize the pressure surges that cause water hammer. The pump control option will maximize the life of the pump and piping systems while minimizing the downtime caused by system failure
- Six SCRs control all three motor phases, providing smooth acceleration and deceleration performance
- Soft acceleration and deceleration reduces wear on belts, gears, chains, clutches, shafts and bearings
- Reduce the peak inrush current's stress on the power system
- Minimize peak starting torque to diminish mechanical system wear and damage
- 120 Vac control voltage enhances ease of connections
- The S611 lends itself to serviceability. The PCBs and contactors can be replaced in the field

### *Protective Features*

All protective features can be configured, enabled or disabled with the UI or through the communications network.

### Motor Overload

The S611 includes electronic overload protection as standard. The overload meets applicable requirements for a motor overload protective device. The overload protects the motor from over heat conditions with the use of sophisticated algorithms that model true motor heating, resulting in superior motor protection and fewer nuisance trips.

The S611 calculates a thermal memory value. A 100% value represents the maximum safe temperature of the motor. When the thermal memory value reaches 100%, an overload trip will occur removing power to the motor.

Upon trip, the S611 stores the calculated motor heating value and will not allow a motor re-start until the motor has cooled. This feature ensures the motor will not be damaged by repeated overload trip, reset and re-start cycles.

The thermal memory value can be monitored through the UI or the communications network. The thermal memory value can be of great use in determining an impending overload trip condition. Alarms can be implemented in the process monitoring system warning of an impending trip before a trip occurs halting the process. Costly system downtime can be avoided.

The trip current is adjusted to match the specific application requirements by entering the motor nameplate full load current rating and trip class. The FLA adjustment includes a 2 to 1 adjustment range. The overload trip class is adjustable from class 5 through class 30. The overload is ambient temperature compensated - meaning its trip characteristics will not vary with changes in ambient temperature. The overload protection can be enabled, disabled, or disabled on start.

### Short Circuit

The use of a short circuit protective device in coordination with the S611 is required in branch motor circuits by most electrical codes. Short circuit coordination ratings with both fuses and Eaton molded case circuit breakers are available providing customers with design flexibility. The S611 has short circuit coordination ratings as an open component, an enclosed starter, and in a motor control center. The short circuit ratings can go up to 100KA.

### Jam

Excessive current and torque up to locked rotor levels can occur in a jam condition. The condition can result in stress and damage to the motor, load, mechanical system, and the electrical distribution system. Jam protection prevents the stress and damage from a jam during normal run. After the motor is started, a current greater than 300% FLA setting will cause the starter to trip on a jam fault.

### Stall

Excessive current and torque up to locked rotor levels can occur in a stall condition. The condition can lead to an overload trip and result in stress and damage to the motor, load, mechanical system, and the electrical distribution system. Stall protection prevents stress and damage to a motor that has not come up to speed, or stalled after the soft start time. The S611 will trip to protect the system in the event that the motor did not get to the rated speed in the defined soft start period. A current greater than 200% FLA at the end of the soft start period will cause the starter to trip on a stall fault.

### Pole Over Temperature

High ambient temperatures, extended ramp times and high duty cycle conditions may cause the S611 power pole conductors to reach a temperature that exceeds their thermal rating. The S611 is equipped with sensors that monitor the temperature of the power poles. Over temperature protection occurs if the device's thermal capacity is exceeded. The soft starter will trip in over temperature conditions, preventing device failure.

The device pole temperature value can be monitored through the UI or the communications network. This feature can be of use in determining an impending over temperature trip condition. Alarms can be implemented in the process monitoring system warning of an impending trip before a trip occurs, halting the process. Costly system shutdown can be avoided.

### Phase Loss

Loss of a phase can cause a significant increase in the current drawn in the remaining two phases. Phase loss can lead to motor damage before an eventual overload trip occurs. Phase loss is typically an indication of a failure in the electrical distribution system. The S611 will detect a phase loss and trip if any phase current drops below a preset value. The phase loss trip level is adjustable from 0% to 100% of the average of the other two phase levels with an adjustable trip delay of 0.1 to 60 seconds.

### Phase Imbalance

Phase current or voltage imbalance can cause a significant increase in the current drawn in the remaining two phases. Phase imbalance can lead to motor damage before an eventual overload trip. Phase imbalance is typically an indication of a failure in the electrical distribution system or the motor. The S611 will detect both current and voltage phase imbalances and trip if any phase becomes imbalanced as compared to the average of the other two phases.

The phase current imbalance trip level is adjustable from 0% to 100% of the average of the current in the other two phases with an adjustable trip delay of 0.1 to 60 seconds.

The phase voltage imbalance trip level is adjustable from 0% to 100% of the average of the voltage in the other two phases with an adjustable trip delay of 0.1 to 60 seconds.

### Reset Mode

The S611 can be set up for automatic or manual reset on trip. The manual reset mode requires the operator to physically press the RESET button located on the soft starter. The overload can be manually reset through the UI or through the communications network.

The automatic reset mode allows the soft starter to be automatically reset as soon as the trip condition is no longer present. With the automatic reset mode, after the fault is no longer present, the motor will be restarted as soon as a valid start signal is present.

### Phase Reversal

The S611 can determine if the proper line phase sequence is present by default. The device will trip if the line phase sequence is something other than A-B-C. The S611 can be configured to operate under reversed phase conditions (A-C-B).

### Shorted SCR Detection

The S611 monitors the operation of the power poles and will trip under a shorted SCR condition.

### Open SCR Detection

The S611 monitors the operation of the power poles and will trip under an open SCR condition.

### Low Current

Low current conditions can be a result of a loss of load or a failure in the mechanical system. The S611 has low current protection that will trip if the average RMS current falls below a preset value. The low current protection can be programmed as a percent of motor FLA from 0% to 100%.

### Low Voltage

Low voltage conditions can result from disturbances in the electrical power distribution system. Low voltage conditions can cause a malfunction and damage to electrical equipment. The S611 has low voltage protection that will trip if the average RMS voltage falls below a preset value. The low voltage protection can be programmed as a percent of nominal voltage from 1% to 99% with a trip delay of 0.1 to 60 seconds.

### High Voltage

High voltage conditions can result from disturbances in the electrical power distribution system. High voltage conditions can cause malfunctions or failures of electrical equipment. The S611 has high voltage protection that will trip if the average RMS voltage is greater than a preset value. The high voltage protection can be programmed as a percent of nominal voltage from 101% to 120% with a trip delay of 0.1 to 60 seconds.

1

### *Monitoring Capabilities*

The S611 has an impressive array of system monitoring capabilities that allow users to access real time process and diagnostic data. This data can be viewed at the device with the UI or through a communications network. Data over a communications network can provide valuable insight into the condition of the equipment and processes. Maintenance and production personnel can monitor critical operational and maintenance data from a central control station that can be located far away from the production facility. Process data can be monitored to determine system anomalies that may indicate a need for preventive maintenance or an Impeding failure.

Adjustments made through the communications network can reduce costs by minimizing the time traveling to the location where the motor controls are located. When faults do occur, real time fault data can assist maintenance in troubleshooting and planning repair resources. Remote reset signals can be given to tripped devices without the need for manual intervention by maintenance personnel.

**Average Line Current**

Provides the average of the three phase RMS line currents in amps, accurate to within 2%. Current data can be used to indicate a need for maintenance. Increased currents in a fixed load application can indicate a reduction in system efficiencies and performance, signifying system maintenance is due.

**Average Pole Current**

Provides the average of the three phase RMS pole currents in amps, accurate to within 2%. The pole current is the current through the soft starter. The line and pole current will be identical in in-line applications, and will differ in inside-the-delta applications.

**Average Line Current as a % FLA**

Provides the average RMS line current as a percentage of the S611 FLA setting.

**Three-Phase Line Currents**

Provides three RMS phase line currents in amps, accurate to within 2%. Imbalances or changes in the relative phase current to one another can indicate anomalies in the motor or electrical distribution system.

**Three-Phase Pole Currents**

Provides three RMS phase pole currents in amps, accurate to within 2%. The pole current is the current through the soft starter. The line and pole current will be identical in in-line applications.

**Three-Phase Line Voltages**

Provides the individual RMS three phase line voltages. Imbalances or changes in the relative phase voltage to one another can indicate anomalies in the motor or electrical distribution system. Voltage can be used to monitor electrical distribution system performance. Warnings, alarms and system actions to low or high voltage conditions can be implemented.

**Percent Thermal Memory**

Provides the real time calculated thermal memory value. The S611 calculates thermal memory value. A 100% value represents the maximum safe temperature of the motor. When the thermal memory value reaches 100%, an overload trip will occur, removing power to the motor.

The thermal memory value can be of great use in determining an impending overload trip Condition. Alarms can be implemented in the process monitoring system warning of an Impending trip before a trip occurs, halting the process. Costly system downtime can be avoided.

**Pole Temperature**

Increases in pole temperature are caused by increases in ambient temperature, start/stop times and start duty cycles. Changes in pole temperatures represent a change in system operating conditions. Identifying unexpected operating conditions or changes can prompt maintenance and aid in process evaluation activities.

**Power Monitoring**

S611 can monitor power and it can be displayed on the UI.

**Start Count**

Number of starts are stored in the device and can be displayed using field bus.

***Diagnostics***

**Fault Queue**

Current fault and a fault queue containing the last nine system faults can be read through the UI or communications network. Fault identification can minimize troubleshooting time and cost and prevent arc flash incidents. The fault queue can be remotely accessed through a communications network to assist in planning maintenance resources. 30 different faults can be identified by the S611.

**Control Status**

The S611 provides data that represents system conditions that can be read through the UI or the communications network. This data identifies the status of the system and the control commands the system is requesting of the S611. This can be used for advanced Troubleshooting and system integration activities.

**Field Serviceability**

In the case of maintenance, the S611 provides easy access and replacement of key components including control board and internal bypass contactors—significantly increasing its service life. If a component ever needs to be replaced, this straightforward operation can be completed by an end-user without the need to call in an outside service technician or engineer. These components are stocked and available for order and quick fulfillment—ensuring your operation continues with minimal downtime.

## Standards and Certifications

- IEC 60947-4-2
- UL listed
- CSA certified (3211 06)

## Instructional Leaflets

- Instruction Manual: MN03902011E
- Quick Start Guide: MN03901003E

## Catalog Number Selection

### S611 Soft Starters

**S 611 B 125 N 3 S**

**S** = Soft Starter

**611** = Non-combination soft starter

| Frame Size |
|---|
| **A** = 52–77 Amps |
| **B** = 99–125 Amps |
| **C** = 156–180 Amps |
| **D** = 242 Amps |
| **E** = 302–361 Amps |
| **F** = 414 Amps |

| Ampere Rating | |
|---|---|
| **052** = 52A | **180** = 180A |
| **065** = 65A | **242** = 242A |
| **077** = 77A | **302** = 302A |
| **099** = 99A | **361** = 361A |
| **125** = 125A | **414** = 414A |
| **156** = 156A | |

| Options |
|---|
| **N** = No options |
| **P** = Pump control |

| Number of Poles |
|---|
| **3** = Three-pole device |

**S** = Standard soft starter

1

## Product Selection

Motor applications and customer needs come in many different varieties. With the standard and severe duty rating tables, we have attempted to provide guidelines on what the soft starter is capable of. If the application falls under these categories, you can use these charts. For other applications, or when a question arises, consult with your local Eaton Representative or call the Eaton Technical Resource Center.

### *Horsepower Ratings*

**Note:** Always refer to motor plate FLA and ensure that the motor plate FLA is equal to or lower than the maximum current value in the tables.

**S611**

### Standard Duty—300% Current for 15 Seconds, 115% Continuous

| Maximum Current (Amps) | Horsepower Rating 208V | 240V | 480V | 600V | Catalog Number |
|---|---|---|---|---|---|
| 52 | 15 | 15 | 40 | 50 | **S611A052N3S** |
| 65 | 20 | 20 | 50 | 60 | **S611A065N3S** |
| 77 | 25 | 25 | 60 | 75 | **S611A077N3S** |
| 99 | 30 | 30 | 75 | 100 | **S611B099N3S** |
| 125 | 40 | 40 | 100 | 125 | **S611B125N3S** |
| 156 | 50 | 60 | 125 | 150 | **S611C156N3S** |
| 180 | 60 | 60 | 150 | 150 | **S611C180N3S** |
| 242 | 75 | 75 | 200 | 250 | **S611D242N3S** |
| 302 | 100 | 100 | 250 | 300 | **S611E302N3S** |
| 361 | 125 | 150 | 300 | 350 | **S611E361N3S** |
| 414 | 150 | 150 | 350 | 450 | **S611F414N3S** |

### Standard Duty Plus—350% FLA for 30 Seconds, 115% Continuous

| Maximum Current (Amps) | Horsepower Rating 208V | 240V | 480V | 600V | Catalog Number |
|---|---|---|---|---|---|
| 52 | 15 | 15 | 40 | 50 | **S611A052N3S** |
| 65 | 20 | 20 | 50 | 60 | **S611A065N3S** |
| 71 | 20 | 25 | 60 | 75 | **S611A077N3S** |
| 99 | 30 | 30 | 75 | 100 | **S611B099N3S** |
| 119 | 40 | 40 | 100 | 125 | **S611B125N3S** |
| 156 | 50 | 60 | 125 | 150 | **S611C156N3S** |
| 180 | 60 | 60 | 150 | 150 | **S611C180N3S** |
| 242 | 75 | 75 | 200 | 250 | **S611D242N3S** |
| 302 | 100 | 100 | 250 | 300 | **S611E302N3S** |
| 361 | 125 | 150 | 300 | 350 | **S611E361N3S** |
| 407 | 150 | 150 | 350 | 400 | **S611F414N3S** |

**Note:** Always refer to motor plate FLA and ensure that the motor plate FLA is equal to or lower than the maximum current value in the tables.

**S611**

### Heavy Duty—500% FLA for 30 Seconds, 125% Continuous

| Maximum Current (Amps) | Horsepower Rating 208V | 240V | 480V | 600V | Catalog Number |
|---|---|---|---|---|---|
| 49 | 15 | 15 | 40 | 50 | **S611A052N3S** |
| 83 | 25 | 30 | 60 | 75 | **S611B099N3S** |
| 142 | 40 | 60 | 125 | 150 | **S611C156N3S** |
| 225 | 75 | 75 | 200 | 200 | **S611D242N3S** |
| 256 | 75 | 100 | 200 | 250 | **S611E361N3S** |
| 285 | 100 | 125 | 250 | 300 | **S611F414N3S** |

### Severe Duty—600% FLA for 30 Seconds, 125% Continuous

| Maximum Current (Amps) | Horsepower Rating 208V | 240V | 480V | 600V | Catalog Number |
|---|---|---|---|---|---|
| 41 | 10 | 15 | 30 | 40 | **S611A052N3S** |
| 69 | 20 | 30 | 60 | 60 | **S611B099N3S** |
| 117 | 30 | 50 | 100 | 125 | **S611C180N3S** |
| 187 | 60 | 75 | 150 | 200 | **S611D242N3S** |
| 213 | 75 | 75 | 150 | 200 | **S611E361N3S** |
| 238 | 75 | 100 | 200 | 250 | **S611F414N3S** |

## Accessories

### Optional Accessory Kits

| Description | S611 Current Rating | Accessory Kit Part Number |
|---|---|---|
| User interface remote mounting kit —3.28 ft (1m) | 52–414A | **S611-RMK-100** |
| User interface remote mounting kit—6.56 ft (2m) | 52–414A | **S611-RMK-200** |
| User interface remote mounting kit—9.84 ft (3m) | 52–414A | **S611-RMK-300** |
| User interface communication cable—3.28 ft (1m) | 52–414A | **D77E-QPIP100** |
| User interface communication cable—6.56 ft (2m) | 52–414A | **D77E-QPIP200** |
| User interface communication cable—9.84 ft (3m) | 52–414A | **D77E-QPIP300** |
| Lug kit—mechanical | 52–77A | **S611-LUG-M01** |
| | 99–125A | **S611-LUG-M02** |
| | 156–242A | **S611-LUG-M03** |
| | 302–414A | **S611-LUG-M04** |

## Options

### *Pump Control*

For pump control option, change the **8th** digit in the Catalog Number to **P**, as in S611XXX**P**3S.

## Replacement Parts

### S611 Replacement Components

| Description | Part Number |
|---|---|
| User interface | **S611-KEYPAD** |
| User interface communication cable—0.25m (0.82 ft) | **D77E-QPIP25** |
| Control board assembly—52A standard | **S611-PCB-052S** |
| Control board assembly—65A standard | **S611-PCB-065S** |
| Control board assembly—77A standard | **S611-PCB-077S** |
| Control board assembly—99A standard | **S611-PCB-099S** |
| Control board assembly—125A standard | **S611-PCB-125S** |
| Control board assembly—156A standard | **S611-PCB-156S** |
| Control board assembly—180A standard | **S611-PCB-180S** |
| Control board assembly—242A standard | **S611-PCB-242S** |
| Control board assembly—302A standard | **S611-PCB-302S** |
| Control board assembly—361A standard | **S611-PCB-361S** |
| Control board assembly—414A standard | **S611-PCB-414S** |
| Control board assembly—52A pump | **S611-PCB-052P** |
| Control board assembly—65A pump | **S611-PCB-065P** |
| Control board assembly—77A pump | **S611-PCB-077P** |
| Control board assembly—99A pump | **S611-PCB-099P** |
| Control board assembly—125A pump | **S611-PCB-125P** |
| Control board assembly—156A pump | **S611-PCB-156P** |
| Control board assembly—180A pump | **S611-PCB-180P** |
| Control board assembly—242A pump | **S611-PCB-242P** |
| Control board assembly—302A pump | **S611-PCB-302P** |
| Control board assembly—361A pump | **S611-PCB-361P** |
| Control board assembly—414A pump | **S611-PCB-414P** |
| Frame A/B CT | **S611-CT-AB** |
| Frame C/D CT | **S611-CT-CD** |
| Frame E/F CT | **S611-CT-EF** |
| Contactor assembly—52–180A | **C25DNY172** |
| Contactor assembly—242–414A | **C25DNY173** |

## Technical Data and Specifications

### Soft Starters—S611

| Description | | S611 Soft Starter (Partial Catalog Number) S611A052 | S611A065 | S611A072 | S611B099 |
|---|---|---|---|---|---|
| Max. current capacity | A | 52 | 65 | 77 | 99 |
| FLA range | A | 26–52 | 32.5–65 | 38.5–77 | 48–99 |
| **Dimensions** | | | | | |
| Width | inch (mm) | 11.58 (294) | 11.58 (294) | 11.58 (294) | 11.58 (294) |
| Height | inch (mm) | 19.45 (494) | 19.45 (494) | 19.45 (494) | 19.45 (494) |
| Depth | inch (mm) | 7.46 (189) | 7.46 (189) | 7.46 (189) | 7.46 (189) |
| Weight | lb (kg) | 24 (11) | 24 (11) | 24 (11) | 24 (11) |
| **General Information** | | | | | |
| Bypass mechanical lifespan | | 10M | 10M | 10M | 10M |
| Insulating voltage | V | 660 | 660 | 660 | 660 |
| Ramp time range | Seconds | 0.5–180 | 0.5–180 | 0.5–180 | 0.5–180 |
| Vibration resistance—non-operating | g | 3g up to 242A units, 2g on 302A to 414A units | 3g up to 242A units, 2g on 302A to 414A units | 3g up to 242A units, 2g on 302A to 414A units | 3g up to 242A units, 2g on 302A to 414A units |
| Vibration resistance—operating | g | 1 | 1 | 1 | 1 |
| Shock resistance | g | 15g up to 242A units, 5g on 302A to 414A units | 15g up to 242A units, 5g on 302A to 414A units | 15g up to 242A units, 5g on 302A to 414A units | 15g up to 242A units, 5g on 302A to 414A units |
| **Electrical Information** | | | | | |
| Operating voltage | V | 130–600 | 130–600 | 130–600 | 130–600 |
| Operating frequency | Hertz | 47–63 | 47–63 | 47–63 | 47–63 |
| Overload setting (frame) | % FLA | 50–100 | 50–100 | 50–100 | 50–100 |
| Trip class | | 5, 10, 20, 30 | 5, 10, 20, 30 | 5, 10, 20, 30 | 5, 10, 20, 30 |
| **Cabling Capacity (IEC 947)** | | | | | |
| Number of conductors | | 1 | 1 | 1 | 1 |
| Wire sizes | AWG | 14–2/0 | 14–2/0 | 14–2/0 | 14–2/0 |
| Type of connectors | | Lug | Lug | Lug | Lug |
| **Control Wiring** | | | | | |
| Wire sizes | AWG | 22–12 | 22–12 | 22–12 | 22–12 |
| Number of conductors | | 2 (or one 12–14 AWG) | 2 (or one 12–14 AWG) | 2 (or one 12–14 AWG) | 2 (or one 12–14 AWG) |
| Torque requirements | lb-in | 3.5 | 3.5 | 3.5 | 3.5 |
| Maximum size | AWG | 12 | 12 | 12 | 12 |
| **Control Power Requirements** | | | | | |
| Voltage range (120V ±10%) | V | 108–132 | 108–132 | 108–132 | 108–132 |
| Steady state current | A | 0.375 | 0.375 | 0.375 | 0.375 |
| Inrush current | A | 0.5 | 0.5 | 0.5 | 0.5 |
| Ripple | % | 1 | 1 | 1 | 1 |
| **Relays (1) Class A and C** | | | | | |
| Voltage AC—maximum | V | 120 | 120 | 120 | 120 |
| Voltage DC—maximum | V | 24 | 24 | 24 | 24 |
| Amps—maximum | A | 3 | 3 | 3 | 3 |
| **Environment** | | | | | |
| Temperature—operating | °C | –20° to 50°C | –20° to 50°C | –20° to 50°C | –20° to 50°C |
| Temperature—storage | °C | –40° to 85°C | –40° to 85°C | –40° to 85°C | –40° to 85°C |
| Altitude | Meters | <2000m, derate 0.5% per 100m >2000m | <2000m, derate 0.5% per 100m >2000m | <2000m, derate 0.5% per 100m >2000m | <2000m, derate 0.5% per 100m >2000m |
| Humidity | % | <95% non-condensing | <95% non-condensing | <95% non-condensing | <95% non-condensing |
| Operating position | | Vertical, line side up | Vertical, line side up | Vertical, line side up | Vertical, line side up |
| Pollution degree IEC947-1 | | 3 | 3 | 3 | 3 |
| Impulse withstand voltage IEC947-4-1 | V | 6000 | 6000 | 6000 | 6000 |

1

## Soft Starters—S611, continued

| Description | | S611 Soft Starter (Partial Catalog Number) S611B125 | S611C156 | S611C180 | S611D242 |
|---|---|---|---|---|---|
| Max. current capacity | A | 125 | 156 | 180 | 242 |
| FLA range | A | 62.5–125 | 78–156 | 90–180 | 120–242 |
| **Dimensions** | | | | | |
| Width | inch (mm) | 11.58 (294) | 11.58 (294) | 11.58 (294) | 11.58 (294) |
| Height | inch (mm) | 19.45 (494) | 20.83 (529) | 20.83 (529) | 20.83 (529) |
| Depth | inch (mm) | 7.46 (189) | 8.37 (213) | 8.37 (213) | 8.37 (213) |
| Weight | lb (kg) | 24 (11) | 33 (15) | 33 (15) | 38 (17) |
| **General Information** | | | | | |
| Bypass mechanical lifespan | | 10M | 10M | 10M | 10M |
| Insulating voltage | V | 660 | 660 | 660 | 660 |
| Ramp time range | Seconds | 0.5–180 | 0.5–180 | 0.5–180 | 0.5–180 |
| Vibration resistance—non-operating | g | 3g up to 242A units, 2g on 302A to 414A units | 3g up to 242A units, 2g on 302A to 414A units | 3g up to 242A units, 2g on 302A to 414A units | 3g up to 242A units, 2g on 302A to 414A units |
| Vibration resistance—operating | g | 1 | 1 | 1 | 1 |
| Shock resistance | g | 15g up to 242A units, 5g on 302A to 414A units | 15g up to 242A units, 5g on 302A to 414A units | 15g up to 242A units, 5g on 302A to 414A units | 15g up to 242A units, 5g on 302A to 414A units |
| **Electrical Information** | | | | | |
| Operating voltage | V | 130–600 | 130–600 | 130–600 | 130–600 |
| Operating frequency | Hertz | 47–63 | 47–63 | 47–63 | 47–63 |
| Overload setting (frame) | % FLA | 50–100 | 50–100 | 50–100 | 50–100 |
| Trip class | | 5, 10, 20, 30 | 5, 10, 20, 30 | 5, 10, 20, 30 | 5, 10, 20, 30 |
| **Cabling Capacity (IEC 947)** | | | | | |
| Number of conductors | | 1 | 1 | 1 | 1 |
| Wire sizes | AWG | 2–600 kcmil | 2–600 kcmil | 2–600 kcmil | 2–600 kcmil |
| Type of connectors | | Lug | Lug | Lug | Lug |
| **Control Wiring** | | | | | |
| Wire sizes | AWG | 22–12 | 22–12 | 22–12 | 22–12 |
| Number of conductors | | 2 (or one 12–14 AWG) | 2 (or one 12–14 AWG) | 2 (or one 12–14 AWG) | 2 (or one 12–14 AWG) |
| Torque requirements | lb-in | 3.5 | 3.5 | 3.5 | 3.5 |
| Maximum size | AWG | 12 | 12 | 12 | 12 |
| **Control Power Requirements** | | | | | |
| Voltage range (120V ±10%) | V | 108–132 | 108–132 | 108–132 | 108–132 |
| Steady state current | A | 0.375 | 0.375 | 0.375 | 0.375 |
| Inrush current | A | 0.5 | 0.5 | 0.5 | 0.5 |
| Ripple | % | 1 | 1 | 1 | 1 |
| **Relays (1) Class A and C** | | | | | |
| Voltage AC—maximum | V | 120 | 120 | 120 | 120 |
| Voltage DC—maximum | V | 24 | 24 | 24 | 24 |
| Amps—maximum | A | 3 | 3 | 3 | 3 |
| **Environment** | | | | | |
| Temperature—operating | °C | –20° to 50°C | –20° to 50°C | –20° to 50°C | –20° to 50°C |
| Temperature—storage | °C | –40° to 85°C | –40° to 85°C | –40° to 85°C | –40° to 85°C |
| Altitude | Meters | <2000m, derate 0.5% per 100m >2000m | <2000m, derate 0.5% per 100m >2000m | <2000m, derate 0.5% per 100m >2000m | <2000m, derate 0.5% per 100m >2000m |
| Humidity | % | <95% non-condensing | <95% non-condensing | <95% non-condensing | <95% non-condensing |
| Operating position | | Vertical, line side up | Vertical, line side up | Vertical, line side up | Vertical, line side up |
| Pollution degree IEC947-1 | | 3 | 3 | 3 | 3 |
| Impulse withstand voltage IEC947-4-1 | V | 6000 | 6000 | 6000 | 6000 |

## Soft Starters—S611, continued

| Description | | S611 Soft Starter (Partial Catalog Number) S611E302 | S611E361 | S611F414 |
|---|---|---|---|---|
| Max. current capacity | A | 302 | 361 | 414 |
| FLA range | A | 151–302 | 180.5–361 | 207–414 |
| **Dimensions** | | | | |
| Width | inch (mm) | 17.56 (446) | 17.56 (446) | 17.56 (446) |
| Height | inch (mm) | 31.15 (791) | 31.15 (791) | 31.15 (791) |
| Depth | inch (mm) | 9.54 (242) | 9.54 (242) | 9.54 (242) |
| Weight | lb (kg) | 86 (39) | 86 (39) | 102 (46) |
| **General Information** | | | | |
| Bypass mechanical lifespan | | 10M | 10M | 10M |
| Insulating voltage | V | 660 | 660 | 660 |
| Ramp time range | Seconds | 0.5–180 | 0.5–180 | 0.5–180 |
| Vibration resistance—non-operating | g | 3g up to 242A units, 2g on 302A to 414A units | 3g up to 242A units, 2g on 302A to 414A units | 3g up to 242A units, 2g on 302A to 414A units |
| Vibration resistance—operating | g | 1 | 1 | 1 |
| Shock resistance | g | 15g up to 242A units, 5g on 302A to 414A units | 15g up to 242A units, 5g on 302A to 414A units | 15g up to 242A units, 5g on 302A to 414A units |
| **Electrical Information** | | | | |
| Operating voltage | V | 130–600 | 130–600 | 130–600 |
| Operating frequency | Hertz | 47–63 | 47–63 | 47–63 |
| Overload setting (frame) | % FLA | 50–100 | 50–100 | 50–100 |
| Trip class | | 5, 10, 20, 30 | 5, 10, 20, 30 | 5, 10, 20, 30 |
| **Cabling Capacity (IEC 947)** | | | | |
| Number of conductors | | 2 | 2 | 2 |
| Wire sizes | AWG | 2–600 kcmil | 2–600 kcmil | 2–600 kcmil |
| Type of connectors | | Lug | Lug | Lug |
| **Control Wiring** | | | | |
| Wire sizes | AWG | 22–12 | 22–12 | 22–12 |
| Number of conductors | | 2 (or one 12–14 AWG) | 2 (or one 12–14 AWG) | 2 (or one 12–14 AWG) |
| Torque requirements | lb-in | 3.5 | 3.5 | 3.5 |
| Maximum size | AWG | 12 | 12 | 12 |
| **Control Power Requirements** | | | | |
| Voltage range (120V ±10%) | V | 108–132 | 108–132 | 108–132 |
| Steady state current | A | 0.75 | 0.75 | 0.75 |
| Inrush current | A | 1 | 1 | 1 |
| Ripple | % | 1 | 1 | 1 |
| **Relays (1) Class A and C** | | | | |
| Voltage AC—maximum | V | 120 | 120 | 120 |
| Voltage DC—maximum | V | 24 | 24 | 24 |
| Amps—maximum | A | 3 | 3 | 3 |
| **Environment** | | | | |
| Temperature—operating | °C | –20° to 50°C | –20° to 50°C | –20° to 50°C |
| Temperature—storage | °C | –40° to 85°C | –40° to 85°C | –40° to 85°C |
| Altitude | Meters | <2000m, derate 0.5% per 100m >2000m | <2000m, derate 0.5% per 100m >2000m | <2000m, derate 0.5% per 100m >2000m |
| Humidity | % | <95% non-condensing | <95% non-condensing | <95% non-condensing |
| Operating position | | Vertical, line side up | Vertical, line side up | Vertical, line side up |
| Pollution degree IEC947-1 | | 3 | 3 | 3 |
| Impulse withstand voltage IEC947-4-1 | V | 6000 | 6000 | 6000 |

1

## Dimensions

Approximate Dimensions in inches (mm)

### A and B Frame

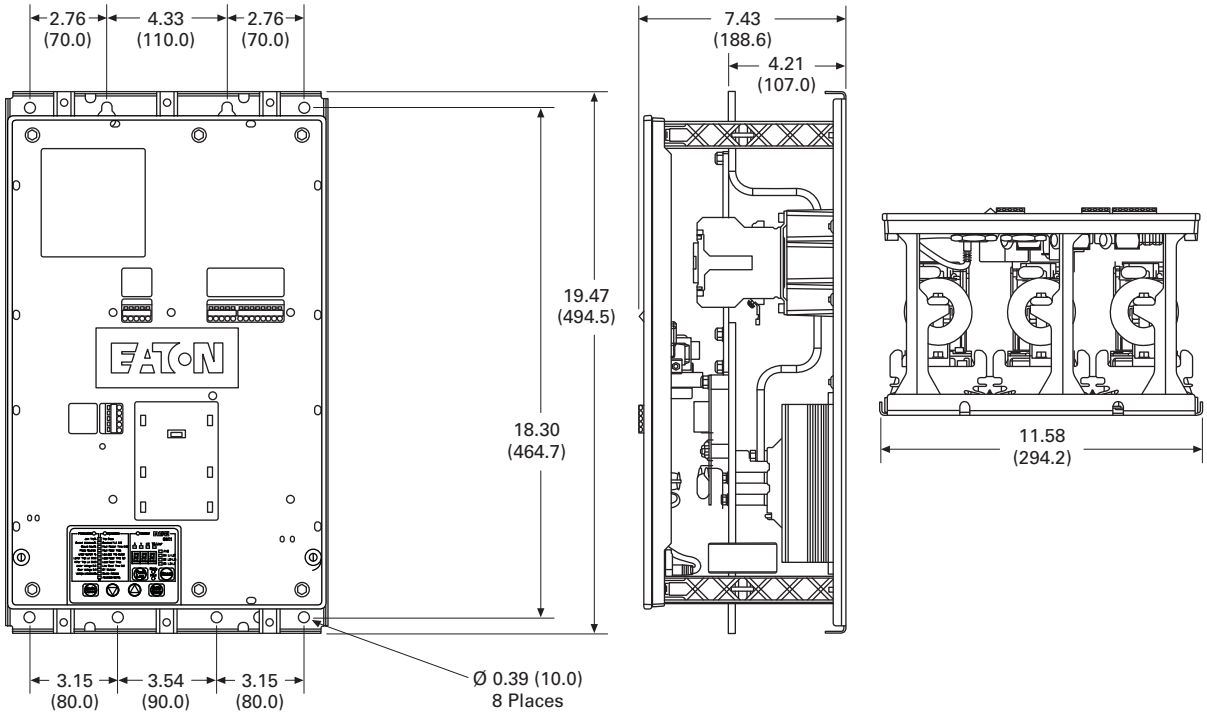


### C and D Frame

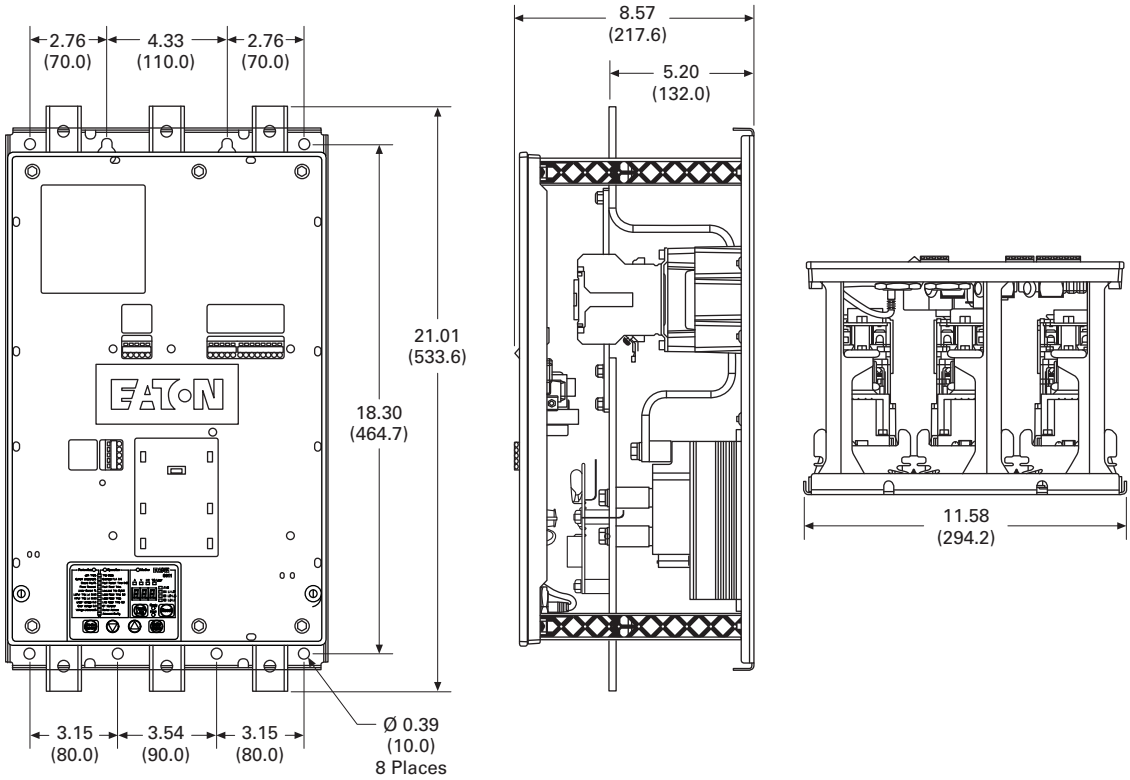

Approximate Dimensions in inches (mm)

### E and F Frame

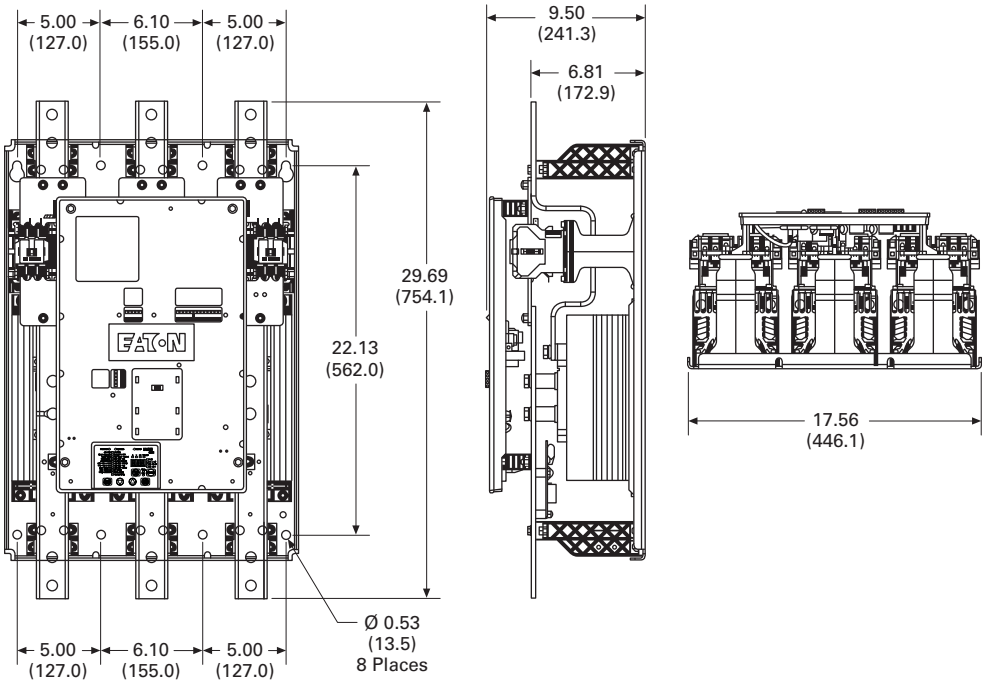

Type S801+, Soft Starters

## Contents


| *Description* | *Page* |
|---|---|
| Type S611, Solid-State Soft Starters | **V6-T1-43** |
| Type S801+, Soft Starters | |
| Operation | **V6-T1-61** |
| Features | **V6-T1-63** |
| Benefits | **V6-T1-63** |
| Standards and Certifications | **V6-T1-63** |
| User Manuals | **V6-T1-63** |
| Catalog Number Selection | **V6-T1-63** |
| Product Selection | **V6-T1-64** |
| Accessories | **V6-T1-66** |
| Options | **V6-T1-67** |
| Technical Data and Specifications | **V6-T1-68** |
| Wiring Diagram | **V6-T1-72** |
| Dimensions | **V6-T1-72** |
| Type S811+, Soft Starters with DIM | **V6-T1-76** |


## Type S801+, Soft Starters

### Product Description

Eaton's S801+ line of reduced voltage soft starters is very compact, multi-functional, easy to install and easy to program. Designed to control acceleration and deceleration of three-phase motors, the line is available for current ranges from 11A all the way through 1000A applications, and is suitable for mounting in motor control centers or in enclosed control (NEMA 1, 4, 4X and 12) applications.

### Application Description

The S801+ line of soft starters is designed to be the smallest, most compact soft starter in the market today. With this small size, it can easily fit in place of existing soft starter designs, wye-delta starters or across-the-line NEMA and IEC starters. This feature allows easy retrofits of existing motor control centers or enclosures, and saves the expense of replacing existing structure or adding a new one to house a soft starter.

The product is designed to work with three-phase motors in a delta (three-lead) configuration. The S801+ works with all motors from fractional horsepower up to motors requiring 1000A of steady-state current. The built-in overload (in ranges from 11–1000A) and run bypass contactor make installation and setup quick and easy. The overload also offers some advanced protective functions to give additional motor protection.

## Operation

### *Overload Functionality*

**Overtemperature**
Protects the device from overheating. Starter will shut down at 100°C.

**Stall**
Selectable protective feature, unit trips to protect system in event motor can not get to rated speed in the defined ramp period.

**Jam**
Selectable protective feature, unit trips to prevent damage to motor during normal run.

**Phase Loss**
Selectable protective feature, trips under voltage loss condition to any phase.

**Phase Reversal**
Selectable protective feature, trips when phase rotation is something other than A-B-C.

**Kick Start**
Selectable feature that provides a current "kick" of up to 550% of full load current for 0 to 2.0 seconds. This provides the additional torque required at startup to break free a motor.

**Ramp Start**
Provides a constant increase in torque to the motor.

**Current Limit Start**
Limits the maximum current available to the motor during the startup phase.

**Soft Stop**
Allows for a controlled stopping of a frictional load.

**Shorted SCR Detection**
Monitors for shorted SCR in the power poles.

### *Starting Characteristics*

**Kick Start**
Provides an initial boost of current to the motor to help overcome motor inertia and begin motor rotation.

- 0–85% of locked rotor torque
- 0–2.0 seconds duration

**Starting Characteristics—Kick Start**

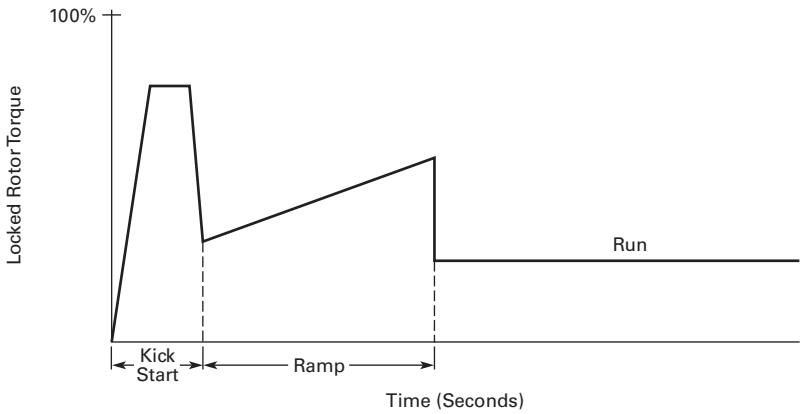


**Ramp Start**
The most commonly used form of soft start. This allows you to set the initial torque value (of the ramp) and then raises it to full voltage conditions.

- Adjustable initial torque = 0–85% of locked rotor torque
- Adjustable ramp time = 0.5–180 seconds

**Starting Characteristics—Ramp Start**

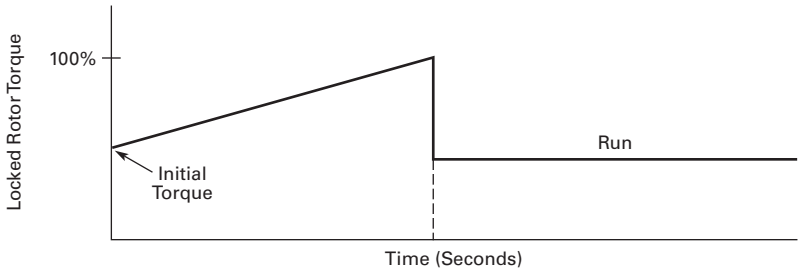

1

**Current Limit**
This mode of soft starting is used when it becomes necessary to limit the maximum starting current due to long start times or to protect the motor.

- Maximum current of 0–85% locked rotor current
- Adjustable ramp time = 0.5–180 seconds

### Starting Characteristics—Current Limit

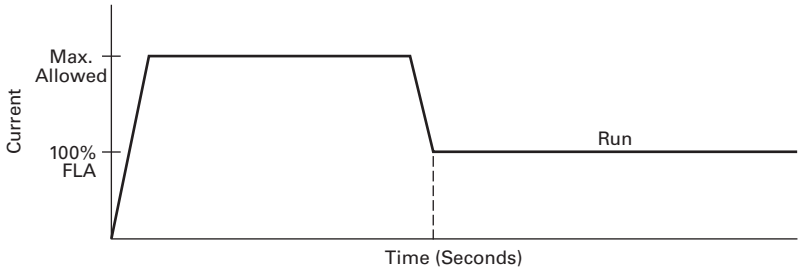


**Soft Stop**
Used when an extended coast-to-rest period is desired. Often used with high friction loads where a sudden stop may cause system or product damage.

- Stop time = 0–60 seconds

### Starting Characteristics—Soft Stop

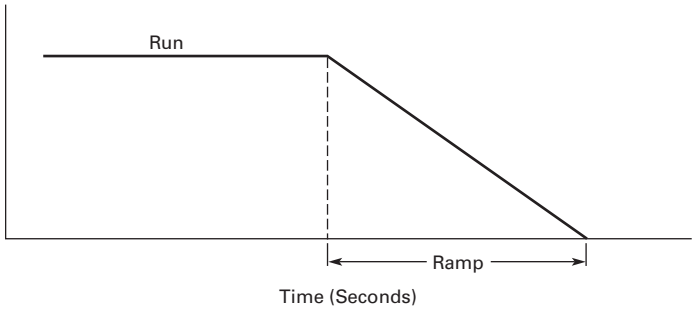

## Features

- Built-in overload protection
- Built-in run bypass contactor
- Adjustable ramp times
- Adjustable torque control
- Adjustable kick start control
- Programmable overload settings, 31–100% (3.2:1) of rated current for the unit
- Physically fits in place of most NEMA and IEC starters
- Easy to use control interface module
- Soft stop control
- Multiple trip class settings (5, 10, 20 and 30)
- Six SCR control
- Optional CIM door mount kit for safety
- Optional IP20 protection

## Benefits

- Reduced wear on belts, gears, chains, clutches, shafts and bearings
- Allows for controlling the inrush current to the motor
- Reduced inrush current leads to more stable power grid and can lower peak demand charges
- Less shock to product on conveyor lines and material handling gear
- 24 Vdc control enhances personnel and equipment safety

## Standards and Certifications

- IEC 947 compliant
- EN 60947-4-2
- CSA certification
- cULus listed (File No. E202571)
- CE marked
- CSA elevator (2411 01)

Listed

## User Manuals

A comprehensive user manual is available and can be downloaded free of charge from www.eaton.com by performing a document search for MN03900002E.

## Catalog Number Selection

### S801+ Open Soft Starters ①②

**S 801+ N66 N 3 S**

**S** = Soft starter

**801+** = Non-combination soft starter

| Ampere Rating | |
|---|---|
| **N37** = 37A | **U50** = 500A ③ |
| **N66** = 66A | **V36** = 360A |
| **R10** = 105A | **V42** = 420A |
| **R13** = 135A | **V50** = 500A |
| **T18** = 180A | **V65** = 650A |
| **T24** = 240A | **V72** = 720A |
| **T30** = 304A | **V85** = 850A |
| **U36** = 360A | **V10** = 1000A |
| **U42** = 420A | |

| Options |
|---|
| **N** = Standard |

| Number of Poles |
|---|
| **3** = Three-pole device |

**S** = Standard soft starter

***Notes***

① S801+T_, S801+U_ and S801+V_ units require lug kits found on **Page V6-T1-66**.
② All units require a 24 Vdc power supply found on catalog **Page V6-T1-66**, or equivalent.
③ S801+U50N35 unit does not have IEC certification.

1

## Product Selection

### *Standard Duty Ratings*

The table below is the base ratings for the soft starter. The tables included in this catalog are meant to be a reference table for different applications, but to match a unit to your exact application, consult with your local Eaton representative or call our Technical Resource Center.

### Standard Duty Ratings

| Starting Method | Ramp Current % of FLA | Ramp Time Seconds | Starts per Hour | Ambient Temperature |
|---|---|---|---|---|
| Soft start | 300% | 30 sec. | 3 | 50°C |
| Full voltage | 500% | 10 sec. | 3 | 50°C |
| Wye-delta | 350% | 20 sec. | 3 | 50°C |
| 80% RVAT | 480% | 20 sec. | 2 | 50°C |
| 65% RVAT | 390% | 20 sec. | 3 | 50°C |
| 50% RVAT | 300% | 20 sec. | 4 | 50°C |

Motor applications and customer needs come in many different varieties. With the standard and severe duty rating tables, we have attempted to provide guidelines on what the soft starter is capable of. If the application falls under these categories, you can use these charts. For other applications, or when a question arises, consult with your local Eaton representative or call our Technical Resource Center.

**S801+**

### Standard Duty—15 Second Ramp, 300% Current Limit at 40°C, Inline Connection

| | Three-Phase Motors | | | | | | | | | | | |
|---|---|---|---|---|---|---|---|---|---|---|---|---|
| | kW Rating (50 Hz) | | | hp Rating (60 Hz) | | | | | | | | |
| | | | | 200V | | 230V | | 460V | | 575–600V | | |
| Max. Current | 230V | 380–400V | 440V | 1.0SF | 1.15SF | 1.0SF | 1.15SF | 1.0SF | 1.15SF | 1.0SF | 1.15SF | Catalog Number |
| **Frame Size N** | | | | | | | | | | | | |
| 37 | 10 | 18.5 | 18.5 | 10 | 10 | 10 | 10 | 25 | 20 | 30 | 30 | **S801+N37N3S** |
| 66 | 18.5 | 30 | 37 | 20 | 15 | 20 | 20 | 50 | 40 | 60 | 50 | **S801+N66N3S** |
| **Frame Size R** | | | | | | | | | | | | |
| 105 | 30 | 55 | 59 | 30 | 25 | 40 | 30 | 75 | 60 | 100 | 75 | **S801+R10N3S** |
| 135 | 40 | 63 | 80 | 40 | 30 | 50 | 40 | 100 | 75 | 125 | 100 | **S801+R13N3S** |
| **Frame Size T** | | | | | | | | | | | | |
| 180 | 51 | 90 | 110 | 60 | 50 | 60 | 60 | 150 | 125 | 150 | 150 | **S801+T18N3S** |
| 240 | 75 | 110 | 147 | 75 | 60 | 75 | 75 | 200 | 150 | 200 | 200 | **S801+T24N3S** |
| 304 | 90 | 160 | 185 | 100 | 75 | 100 | 100 | 250 | 200 | 300 | 250 | **S801+T30N3S** |
| **Frame Size U** | | | | | | | | | | | | |
| 360 | 110 | 185 | 220 | 125 | 100 | 150 | 125 | 300 | 250 | 350 | 300 | **S801+U36N3S** |
| 420 | 129 | 220 | 257 | 150 | 125 | 175 | 150 | 350 | 300 | 450 | 350 | **S801+U42N3S** |
| 500 | 150 | 257 | 300 | 150 | 150 | 200 | 150 | 400 | 350 | 500 | 450 | **S801+U50N3S** ① |
| **Frame Size V** | | | | | | | | | | | | |
| 360 | 110 | 185 | 220 | 125 | 100 | 150 | 125 | 300 | 250 | 350 | 300 | **S801+V36N3S** |
| 420 | 129 | 220 | 257 | 150 | 125 | 175 | 150 | 350 | 300 | 450 | 350 | **S801+V42N3S** |
| 500 | 150 | 257 | 300 | 150 | 150 | 200 | 150 | 400 | 350 | 500 | 450 | **S801+V50N3S** |
| 650 | 200 | 355 | 425 | 250 | 200 | 250 | 200 | 500 | 450 | 600 | 500 | **S801+V65N3S** |
| 720 | 220 | 400 | 450 | — | — | 300 | 250 | 600 | 500 | 700 | 600 | **S801+V72N3S** |
| 850 | 257 | 475 | 500 | — | — | 350 | 300 | 700 | 600 | 900 | 700 | **S801+V85N3S** |
| 1000 | 277 | 525 | 550 | — | — | 400 | 350 | 800 | 700 | 900 | 800 | **S801+V10N3S** |

***Note***

① S801+U50N3S does not have IEC certification.

### *Severe Duty Ratings*

The table below is the base ratings for the soft starter. The tables included in this catalog are meant to be a reference table for different applications, but to match a unit to your exact application, consult with your local Eaton representative or call our Technical Resource Center.

### Severe Duty Ratings

| Starting Method | Ramp Current % of FLA | Ramp Time Seconds | Starts per Hour | Ambient Temperature |
|---|---|---|---|---|
| Soft start | 450% | 30 sec. | 4 | 50°C |
| Full voltage | 500% | 10 sec. | 10 | 50°C |
| Wye-delta | 350% | 65 sec. | 3 | 50°C |
| 80% RVAT | 480% | 25 sec. | 4 | 50°C |
| 65% RVAT | 390% | 40 sec. | 4 | 50°C |
| 50% RVAT | 300% | 60 sec. | 4 | 50°C |

Severe duty ratings are defined as any combination of parameters that exceed the standard duty ratings where the ramp time is over 30 seconds, and/or the number of starts per hour exceeds 4, and/or the current limit set is over 300%. *Example:* 35-second ramp, 5 starts per hour, 350% current limit at 40°C ambient.

**S801+**

### Severe Duty—>30 Second Ramp, >300% Current Limit

| Max. Current | Three-Phase Motor kW Rating (50 Hz) 230V | 380–400V | 440V | hp Rating (60 Hz) 200V 1.0SF | 200V 1.15SF | 230V 1.0SF | 230V 1.15SF | 460V 1.0SF | 460V 1.15SF | 575V 1.0SF | 575V 1.15SF | Catalog Number |
|---|---|---|---|---|---|---|---|---|---|---|---|---|
| **Frame Size N** | | | | | | | | | | | | |
| 22 | 5.5 | 10 | 11 | 5 | 5 | 7-1/2 | 5 | 15 | 10 | 20 | 15 | **S801+N37N3S** |
| 42 | 11 | 18.5 | 22 | 10 | 10 | 15 | 10 | 30 | 25 | 40 | 30 | **S801+N66N3S** |
| **Frame Size R** | | | | | | | | | | | | |
| 65 | 15 | 30 | 33 | 15 | 15 | 20 | 15 | 50 | 40 | 50 | 50 | **S801+R10N3S** |
| 80 | 22 | 40 | 45 | 25 | 20 | 30 | 25 | 60 | 50 | 75 | 60 | **S801+R13N3S** |
| **Frame Size T** | | | | | | | | | | | | |
| 115 | 33 | 59 | 63 | 30 | 30 | 40 | 30 | 75 | 75 | 100 | 100 | **S801+T18N3S** |
| 150 | 45 | 80 | 90 | 50 | 40 | 50 | 50 | 100 | 100 | 150 | 125 | **S801+T24N3S** |
| 192 | 55 | 100 | 110 | 60 | 50 | 75 | 60 | 150 | 125 | 200 | 150 | **S801+T30N3S** |
| **Frame Size U** | | | | | | | | | | | | |
| 240 | 75 | 110 | 147 | 75 | 60 | 75 | 75 | 200 | 150 | 200 | 200 | **S801+U36N3S** |
| 305 | 90 | 160 | 185 | 100 | 75 | 100 | 100 | 250 | 200 | 300 | 250 | **S801+U42N3S** |
| 365 | 110 | 185 | 220 | 125 | 100 | 150 | 125 | 300 | 250 | 350 | 300 | **S801+U50N3S** ① |
| **Frame Size V** | | | | | | | | | | | | |
| 240 | 75 | 110 | 147 | 75 | 60 | 75 | 75 | 200 | 150 | 200 | 200 | **S801+V36N3S** |
| 305 | 90 | 160 | 185 | 100 | 75 | 100 | 100 | 250 | 200 | 300 | 250 | **S801+V42N3S** |
| 365 | 110 | 185 | 220 | 125 | 100 | 150 | 125 | 300 | 250 | 350 | 300 | **S801+V50N3S** |
| 420 | 129 | 220 | 257 | 150 | 125 | 150 | 150 | 350 | 300 | 450 | 350 | **S801+V65N3S** |
| 480 | 147 | 257 | 295 | 150 | 150 | 200 | 150 | 400 | 350 | 500 | 450 | **S801+V72N3S** |
| 525 | 160 | 280 | 335 | 150 | 150 | 200 | 150 | 450 | 350 | 500 | 450 | **S801+V85N3S** |
| 600 | 185 | 315 | 375 | 200 | 150 | 250 | 200 | 500 | 450 | 600 | 500 | **S801+V10N3S** |

***Note***

① S801+U50N3S unit does not have IEC certification.

1

## Accessories

### *Lug Kits*

S801+T_, S801+U_ and S801+V_ soft starters each have different lug options based on your wiring needs.

Each lug kit contains three lugs that can be mounted on either the load or line side.

**Lug Kit**

### Lug Kits

| S801+ Catalog Number | Description | Kits Required | Catalog Number |
|---|---|---|---|
| S801+T_, S801+U_ | 2 cable connections, 4 AWG to 1/0 cable | 2 | **EML22** |
| | 1 cable connection, 4/0 to 500 kcmil cable | | **EML23** |
| | 2 cable connections, 4/0 to 500 kcmil cable | | **EML24** |
| | 1 cable connection, 2/0 to 300 kcmil cable | | **EML25** |
| | 2 cable connections, 2/0 to 300 kcmil cable | | **EML26** |
| S801+V_ | 2 cable connections, 4/0 to 500 kcmil cable | 2 | **EML28** |
| | 4 cable connections, 4/0 to 500 kcmil cable | | **EML30** |
| | 6 cable connections, 4/0 to 500 kcmil cable | | **EML32** |
| | 4 cable connections, 2/0 to 300 kcmil cable | | **EML33** ① |

### *Power Supplies*

24 Vdc power supply that can be used with the S801+ SSRV or as a stand-alone device.

### Power Supplies

| Description | Catalog Number |
|---|---|
| 85–264 Vac input<br>24 Vdc output | **PSG240E** |
| 360–575 Vac input<br>24 Vdc output | **PSG240F** |

### *Lug Cover Kits*

Replacement covers for the S801+T_ and S801+U_ soft starters are available in case of damage to the existing covers.

### Lug Cover Kits

| Description | Catalog Number |
|---|---|
| Lug cover S801+T_, S801+U_ | **EML27** |
| Lug cover S801+V_ | **EML34** |

### *IP20 Kits*

### IP20 Kits

| Description | Catalog Number |
|---|---|
| S801+N_ | **SS-IP20-N** |
| S801+R_ | **SS-IP20-R** |
| S801+T_ and S801+U_ | **SS-IP20-TU** |
| S801+V_ | **SS-IP20-V** |

### *Surge Suppressors*

The surge suppressor can mount on either the line or load side of the soft starter. It is designed to clip the line voltage (or load side induced voltage).

**Surge Suppressor**

### Surge Suppressors

| Description | Catalog Number |
|---|---|
| 600V MOV for S801+_ units | **EMS39** |
| 690V MOV for S801+_ units | **EMS41** |

***Note***

① The EML33 does not have a CSA listing.

### *Mounting Plates*

The mounting plates are designed to help make it easy to install or retrofit the soft starter into enclosures and MCCs. The soft starter can be mounted onto the plate prior to installation. The mounting plate is designed with tear drop mounting holes for easier installation.

#### Mounting Plates

| Description | Catalog Number |
|---|---|
| S801+N_ | **EMM13N** |
| S801+R_ | **EMM13R** |
| S801+T_ and S801+U_ | **EMM13T** |
| S801+V_ | **EMM13V** |

### *Vibration Plates*

The vibration plates allow the soft starter to be applied in high shock and vibration applications. The vibration plate allows vibration up to 5g and shock in up to 40g. The soft starter is mounted onto the vibration plate prior to installation in the panel.

#### Vibration Plates

| Description | Catalog Number |
|---|---|
| S801+N_ | **EMM14N** |
| S801+R_ | **EMM14R** |
| S801+T_ and S801+U_ | **EMM14T** |
| S801+V_ | **EMM14V** |

### *Adapter Plates*

The adapter plate allows customers to retrofit a S801+V_ soft starter with the S801+U_ soft starter.

#### Adapter Plates

| Description | Catalog Number |
|---|---|
| Adapter plates | **EMM13U** |

### *Control Wire Connector*

#### Control Wire Connector

| Description | Catalog Number |
|---|---|
| 12-pin, 5 mm pitch connector for control wiring | **EMA75** |

### *Control Interface Module*

The Control Interface Module (CIM) is available as a replacement part.

#### CIM

| Description | Catalog Number |
|---|---|
| Blank cover (filler) | **EMA68** |
| CIM for standard unit | **EMA71** |
| Panel mounting kit | |
| 3 ft cable | **EMA69A** |
| 5 ft cable | **EMA69B** |
| 8 ft cable | **EMA69C** |
| 10 ft cable | **EMA69D** |

## Options

### *Cooling Fan Kit*

The EMM18 cooling fan kit mounts on either side of any frame size S801+ soft starter to provide additional printed circuit board cooling in high ambient operating temperatures.

#### Cooling Fan Kit

| Description | Catalog Number |
|---|---|
| Fan kit | **EMM18** |

1

## Technical Data and Specifications

### Soft Starters—S801+

| Description | S801+N37N3S | S801+N66N3S | S801+R10N3S | S801+R13N3S |
|---|---|---|---|---|
| Max. current capacity | 37 | 66 | 105 | 135 |
| **General Information** | | | | |
| Bypass mechanical lifespan | 10M | 10M | 10M | 10M |
| Insulating voltage Ui | 660V | 660V | 660V | 660V |
| Ramp time range | 0.5–180 seconds | 0.5–180 seconds | 0.5–180 seconds | 0.5–180 seconds |
| Resistance to vibration | 3g | 3g | 3g | 3g |
| Resistance to shock | 15g | 15g | 15g | 15g |
| **Electrical Information** | | | | |
| Operating voltage | 200–600V | 200–600V | 200–600V | 200–600V |
| Operating frequency | 47–63 Hz | 47–63 Hz | 47–63 Hz | 47–63 Hz |
| Overload setting | 30–100% | 30–100% | 30–100% | 30–100% |
| Trip class | 5, 10, 20 and 30 | 5, 10, 20 and 30 | 5, 10, 20 and 30 | 5, 10, 20 and 30 |
| **Cabling Capacity (IEC 947)** | | | | |
| Number of conductors | 1 | 1 | 1 | 1 |
| Wire sizes | 14–2 | 14–2 | 14–4/0 | 14–4/0 |
| Type of connectors | Box lug | Box lug | Box lug | Box lug |
| **Control Wiring (12-Pin)** | | | | |
| Wire sizes in AWG | 22–14 | 22–14 | 22–14 | 22–14 |
| Number of conductors (stranded) | 2 (or one AWG 12) | 2 (or one AWG 12) | 2 (or one AWG 12) | 2 (or one AWG 12) |
| Torque requirements in lb-in | 3.5 | 3.5 | 3.5 | 3.5 |
| Solid, stranded or flexible max. size in $mm^2$ | 3.31 | 3.31 | 3.31 | 3.31 |
| **Control Power Requirements** | | | | |
| Voltage range (24V ±10%) | 21.6–26.4 | 21.6–26.4 | 21.6–26.4 | 21.6–26.4 |
| Steady-state current amps | 1.0 | 1.0 | 1.0 | 1.0 |
| Inrush current amps | 10 | 10 | 10 | 10 |
| Ripple | 1% | 1% | 1% | 1% |
| **Relays (1) Class A and C** | | | | |
| Voltage AC—maximum | 240 | 240 | 240 | 240 |
| Voltage DC—maximum | 120 | 120 | 120 | 120 |
| Amps—maximum | 3 | 3 | 3 | 3 |
| **Environment** | | | | |
| Temperature—operating | –30° to 50°C (no derating) consult factory for operation >50°C | –30° to 50°C (no derating) consult factory for operation >50°C | –30° to 50°C (no derating) consult factory for operation >50°C | –30° to 50°C (no derating) consult factory for operation >50°C |
| Temperature—storage | –50° to 70°C | –50° to 70°C | –50° to 70°C | –50° to 70°C |
| Altitude | <2000m—consult factory for operation >2000m | <2000m—consult factory for operation >2000m | <2000m—consult factory for operation >2000m | <2000m—consult factory for operation >2000m |
| Humidity | <95% noncondensing | <95% noncondensing | <95% noncondensing | <95% noncondensing |
| Operating position | Any | Any | Any | Any |
| Pollution degree IEC947-1 | 3 | 3 | 3 | 3 |
| Impulse withstand voltage IEC947-4-1 | 6000V | 6000V | 6000V | 6000V |

## Soft Starters—S801+, continued

| Description | S801+T18N3S | S801+T24N3S | S801+T30N3S | S801+U36N3S ①② |
|---|---|---|---|---|
| Max. current capacity | 180 | 240 | 304 | 360 |
| **General Information** | | | | |
| Bypass mechanical lifespan | 10M | 10M | 10M | 10M |
| Insulating voltage Ui | 660V | 660V | 660V | 660V |
| Ramp time range | 0.5–180 seconds | 0.5–180 seconds | 0.5–180 seconds | 0.5–180 seconds |
| Resistance to vibration | 3g | 3g | 3g | 3g |
| Resistance to shock | 15g | 15g | 15g | 15g |
| **Electrical Information** | | | | |
| Operating voltage | 200–600V | 200–600V | 200–600V | 200–600V |
| Operating frequency | 47–63 Hz | 47–63 Hz | 47–63 Hz | 47–63 Hz |
| Overload setting | 30–100% | 30–100% | 30–100% | 30–100% |
| Trip class | 5, 10, 20 and 30 | 5, 10, 20 and 30 | 5, 10, 20 and 30 | 5, 10, 20 and 30 |
| **Cabling Capacity (IEC 947)** | | | | |
| Number of conductors | 1 or 2 | 1 or 2 | 1 or 2 | 1 or 2 |
| Wire sizes | 4 AWG to 500 kcmil | 4 AWG to 500 kcmil | 4 AWG to 500 kcmil | 4 AWG to 500 kcmil |
| Type of connectors | Add-on lug kit | Add-on lug kit | Add-on lug kit | Add-on lug kit |
| **Control Wiring (12-Pin)** | | | | |
| Wire sizes in AWG | 22–14 | 22–14 | 22–14 | 22–14 |
| Number of conductors (stranded) | 2 (or one AWG 12) | 2 (or one AWG 12) | 2 (or one AWG 12) | 2 (or one AWG 12) |
| Torque requirements in lb-in | 3.5 | 3.5 | 3.5 | 3.5 |
| Solid, stranded or flexible max. size in $mm^2$ | 3.31 | 3.31 | 3.31 | 3.31 |
| **Control Power Requirements** | | | | |
| Voltage range (24V ±10%) | 21.6–26.4 | 21.6–26.4 | 21.6–26.4 | 21.6–26.4 |
| Steady-state current amps | 1.0 | 1.0 | 1.0 | 1.0 |
| Inrush current amps | 10 | 10 | 10 | 10 |
| Ripple | 1% | 1% | 1% | 1% |
| **Relays (1) Class A and C** | | | | |
| Voltage AC—maximum | 240 | 240 | 240 | 240 |
| Voltage DC—maximum | 120 | 120 | 120 | 120 |
| Amps—maximum | 3 | 3 | 3 | 3 |
| **Environment** | | | | |
| Temperature—operating | –30° to 50°C (no derating) consult factory for operation >50°C | –30° to 50°C (no derating) consult factory for operation >50°C | –30° to 50°C (no derating) consult factory for operation >50°C | –30° to 50°C (no derating) consult factory for operation >50°C |
| Temperature—storage | –50° to 70°C | –50° to 70°C | –50° to 70°C | –50° to 70°C |
| Altitude | <2000m—consult factory for operation >2000m | <2000m—consult factory for operation >2000m | <2000m—consult factory for operation >2000m | <2000m—consult factory for operation >2000m |
| Humidity | <95% noncondensing | <95% noncondensing | <95% noncondensing | <95% noncondensing |
| Operating position | Any | Any | Any | Any |
| Pollution degree IEC947-1 | 3 | 3 | 3 | 3 |
| Impulse withstand voltage IEC947-4-1 | 6000V | 6000V | 6000V | 6000V |

***Notes***

① 801+U50N3S unit does not have IEC certification.

② UL recognized component.

## Soft Starters—S801+, continued

| Description | S801+U42N3S | S801+U50N3S ① | S801+V36N3S | S801+V42N3S |
|---|---|---|---|---|
| Max. current capacity | 420 | 500 | 360 | 420 |
| **General Information** | | | | |
| Bypass mechanical lifespan | 10M | 10M | 10M | 10M |
| Insulating voltage Ui | 660V | 660V | 660V | 660V |
| Ramp time range | 0.5–180 seconds | 0.5–180 seconds | 0.5–180 seconds | 0.5–180 seconds |
| Resistance to vibration | 3g | 3g | 3g | 3g |
| Resistance to shock | 15g | 15g | 15g | 15g |
| **Electrical Information** | | | | |
| Operating voltage | 200–600V | 200–600V | 200–600V | 200–600V |
| Operating frequency | 47–63 Hz | 47–63 Hz | 47–63 Hz | 47–63 Hz |
| Overload setting | 30–100% | 30–100% | 30–100% | 30–100% |
| Trip class | 5, 10, 20 and 30 | 5, 10, 20 and 30 | 5, 10, 20 and 30 | 5, 10, 20 and 30 |
| **Cabling Capacity (IEC 947)** | | | | |
| Number of conductors | 1 or 2 | 1 or 2 | 2, 4 or 6 | 2, 4 or 6 |
| Wire sizes | 4 AWG to 500 kcmil | 4 AWG to 500 kcmil | 2/0 to 500 kcmil | 2/0 to 500 kcmil |
| Type of connectors | Add-on lug kit | Add-on lug kit | Add-on lug kit | Add-on lug kit |
| **Control Wiring (12-Pin)** | | | | |
| Wire sizes in AWG | 22–14 | 22–14 | 22–14 | 22–14 |
| Number of conductors (stranded) | 2 (or one AWG 12) | 2 (or one AWG 12) | 2 (or one AWG 12) | 2 (or one AWG 12) |
| Torque requirements in lb-in | 3.5 | 3.5 | 3.5 | 3.5 |
| Solid, stranded or flexible max. size in $mm^2$ | 3.31 | 3.31 | 3.31 | 3.31 |
| **Control Power Requirements** | | | | |
| Voltage range (24V ±10%) | 21.6–26.4 | 21.6–26.4 | 21.6–26.4 | 21.6–26.4 |
| Steady-state current amps | 1.0 | 1.0 | 1.4 | 1.4 |
| Inrush current amps | 10 | 10 | 10 | 10 |
| Ripple | 1% | 1% | 1% | 1% |
| **Relays (1) Class A and C** | | | | |
| Voltage AC—maximum | 240 | 240 | 240 | 240 |
| Voltage DC—maximum | 120 | 120 | 120 | 120 |
| Amps—maximum | 3 | 3 | 3 | 3 |
| **Environment** | | | | |
| Temperature—operating | –30° to 50°C (no derating) consult factory for operation >50°C | –30° to 50°C (no derating) consult factory for operation >50°C | –30° to 50°C (no derating) consult factory for operation >50°C | –30° to 50°C (no derating) consult factory for operation >50°C |
| Temperature—storage | –50° to 70°C | –50° to 70°C | –50° to 70°C | –50° to 70°C |
| Altitude | <2000m—consult factory for operation >2000m | <2000m—consult factory for operation >2000m | <2000m—consult factory for operation >2000m | <2000m—consult factory for operation >2000m |
| Humidity | <95% noncondensing | <95% noncondensing | <95% noncondensing | <95% noncondensing |
| Operating position | Any | Any | Any | Any |
| Pollution degree IEC947-1 | 3 | 3 | 3 | 3 |
| Impulse withstand voltage IEC947-4-1 | 6000V | 6000V | 6000V | 6000V |

***Note***

① 801+U50N3S unit does not have IEC certification.

## Soft Starters—S801+, continued

| Description | S801+V50N3S | S801+V65N3S | S801+V72N3S | S801+V85N3S | S801+V10N3S ② |
|---|---|---|---|---|---|
| Max. current capacity | 500 | 650 | 720 | 850 | 1000 |
| **Dimensions** | | | | | |
| Width in inches (mm) | 11.03 (280.2) | 11.03 (280.2) | 11.03 (280.2) | 11.03 (280.2) | 11.03 (280.2) |
| Height in inches (mm) | 16.57 (420.8) | 16.57 (420.8) | 16.57 (420.8) | 16.57 (420.8) | 16.57 (420.8) |
| Depth in inches (mm) | 7.23 (183.7) | 7.23 (183.7) | 7.23 (183.7) | 7.23 (183.7) | 7.23 (183.7) |
| Weight in lbs (kg) | 103 (46.8) with lugs<br>91 (41.4) without lugs | 103 (46.8) with lugs<br>91 (41.4) without lugs | 103 (46.8) with lugs<br>91 (41.4) without lugs | 103 (46.8) with lugs<br>91 (41.4) without lugs | 103 (46.8) with lugs<br>91 (41.4) without lugs |
| **General Information** | | | | | |
| Bypass mechanical lifespan | 10M | 10M | 10M | 10M | 10M |
| Insulating voltage Ui | 660V | 660V | 660V | 660V | 660V |
| Ramp time range | 0.5–180 seconds | 0.5–180 seconds | 0.5–180 seconds | 0.5–180 seconds | 0.5–180 seconds |
| Resistance to vibration | 3g | 3g | 3g | 3g | 3g |
| Resistance to shock | 15g | 15g | 15g | 15g | 15g |
| **Electrical Information** | | | | | |
| Operating voltage | 200–600V | 200–600V | 200–600V | 200–600V | 200–600V |
| Operating frequency | 47–63 Hz | 47–63 Hz | 47–63 Hz | 47–63 Hz | 47–63 Hz |
| Overload setting | 30–100% | 30–100% | 30–100% | 30–100% | 30–100% |
| Trip class | 5, 10, 20 and 30 | 5, 10, 20 and 30 | 5, 10, 20 and 30 | 5, 10, 20 and 30 | 5, 10, 20 and 30 |
| **Cabling Capacity (IEC 947)** | | | | | |
| Number of conductors | 2, 4 or 6 | 2, 4 or 6 | 2, 4 or 6 | 2, 4 or 6 | 2, 4 or 6 |
| Wire sizes | 2/0 to 500 kcmil | 2/0 to 500 kcmil | 2/0 to 500 kcmil | 2/0 to 500 kcmil | 2/0 to 500 kcmil |
| Type of connectors | Add-on lug kit | Add-on lug kit | Add-on lug kit | Add-on lug kit | Add-on lug kit |
| **Control Wiring (12-Pin)** | | | | | |
| Wire sizes in AWG | 22–14 | 22–14 | 22–14 | 22–14 | 22–14 |
| Number of conductors (stranded) | 2 (or one AWG 12) | 2 (or one AWG 12) | 2 (or one AWG 12) | 2 (or one AWG 12) | 2 (or one AWG 12) |
| Torque requirements in lb-in | 3.5 | 3.5 | 3.5 | 3.5 | 3.5 |
| Solid, stranded or flexible max. size in $mm^2$ | 3.31 | 3.31 | 3.31 | 3.31 | 3.31 |
| **Control Power Requirements** | | | | | |
| Voltage range (24V ±10%) | 21.6–26.4 | 21.6–26.4 | 21.6–26.4 | 21.6–26.4 | 21.6–26.4 |
| Steady-state current amps | 1.4 | 1.4 | 1.4 | 1.4 | 1.4 |
| Inrush current amps | 10 | 10 | 10 | 10 | 10 |
| Ripple | 1% | 1% | 1% | 1% | 1% |
| **Relays (1) Class A and C** | | | | | |
| Voltage AC—maximum | 240 | 240 | 240 | 240 | 240 |
| Voltage DC—maximum | 120 | 120 | 120 | 120 | 120 |
| Amps—maximum | 3 | 3 | 3 | 3 | 3 |
| **Environment** | | | | | |
| Temperature—operating | –30° to 50°C (no derating) consult factory for operation >50°C | –30° to 50°C (no derating) consult factory for operation >50°C | –30° to 50°C (no derating) consult factory for operation >50°C | –30° to 50°C (no derating) consult factory for operation >50°C | –30° to 50°C (no derating) consult factory for operation >50°C |
| Temperature—storage | –50° to 70°C | –50° to 70°C | –50° to 70°C | –50° to 70°C | –50° to 70°C |
| Altitude | <2000m—consult factory for operation >2000m | <2000m—consult factory for operation >2000m | <2000m—consult factory for operation >2000m | <2000m—consult factory for operation >2000m | <2000m—consult factory for operation >2000m |
| Humidity | <95% noncondensing | <95% noncondensing | <95% noncondensing | <95% noncondensing | <95% noncondensing |
| Operating position | Any | Any | Any | Any | Any |
| Pollution degree IEC947-1 | 3 | 3 | 3 | 3 | 3 |
| Impulse withstand voltage IEC947-4-1 | 6000V | 6000V | 6000V | 6000V | 6000V |

***Note***

① UL recognized component.

1

## Wiring Diagram

### Line Connected Soft Starter

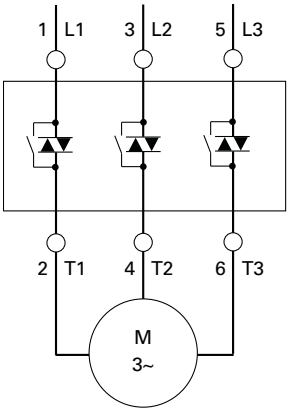


## Dimensions

Approximate Dimensions in Inches (mm)

### Soft Starters—S801+

| Catalog Number | W | H | D | Weight in Lbs (kg) |
|---|---|---|---|---|
| **S801+N37N3S** | 2.66 (67.6) | 7.37 (187.2) | 6.45 (163.9) | 5.8 (2.6) |
| **S801+N66N3S** | 2.66 (67.6) | 7.37 (187.2) | 6.45 (163.9) | 5.8 (2.6) |
| **S801+R10N3S** | 4.38 (111.3) | 7.92 (201.1) | 6.64 (168.6) | 10.5 (4.8) |
| **S801+R13N3S** | 4.38 (111.3) | 7.92 (201.1) | 6.64 (168.6) | 10.5 (4.8) |
| **S801+T18N3S** | 7.65 (194.4) | 12.71 (322.9) | 6.47 (164.4) | 48 (21.8) with lugs 41 (18.6) without lugs |
| **S801+T24N3S** | 7.65 (194.4) | 12.71 (322.9) | 6.47 (164.4) | 48 (21.8) with lugs 41 (18.6) without lugs |
| **S801+T30N3S** | 7.65 (194.4) | 12.71 (322.9) | 6.47 (164.4) | 48 (21.8) with lugs 41 (18.6) without lugs |
| **S801+U36N3S** | 7.73 (196.3) | 12.72 (323.1) | 7.16 (181.8) | 48 (21.8) with lugs 41 (18.6) without lugs |
| **S801+U42N3S** | 7.73 (196.3) | 12.72 (323.1) | 7.16 (181.8) | 48 (21.8) with lugs 41 (18.6) without lugs |
| **S801+U50N3S** | 7.73 (196.3) | 12.72 (323.1) | 7.16 (181.8) | 48 (21.8) with lugs 41 (18.6) without lugs |
| **S801+V36N3S** | 11.05 (280.6) | 16.57 (420.8) | 7.39 (187.8) | 103 (46.8) with lugs 91 (41.4) without lugs |
| **S801+V42N3S** | 11.05 (280.6) | 16.57 (420.8) | 7.39 (187.8) | 103 (46.8) with lugs 91 (41.4) without lugs |
| **S801+V50N3S** | 11.05 (280.6) | 16.57 (420.8) | 7.39 (187.8) | 103 (46.8) with lugs 91 (41.4) without lugs |
| **S801+V65N3S** | 11.05 (280.6) | 16.57 (420.8) | 7.39 (187.8) | 103 (46.8) with lugs 91 (41.4) without lugs |
| **S801+V72N3S** | 11.05 (280.6) | 16.57 (420.8) | 7.39 (187.8) | 103 (46.8) with lugs 91 (41.4) without lugs |
| **S801+V85N3S** | 11.05 (280.6) | 16.57 (420.8) | 7.39 (187.8) | 103 (46.8) with lugs 91 (41.4) without lugs |
| **S801+V10N3S** | 11.05 (280.6) | 16.57 (420.8) | 7.39 (187.8) | 103 (46.8) with lugs 91 (41.4) without lugs |

Also refer to dimension drawings on **Pages V6-T1-73** through **V6-T1-75.**

Approximate Dimensions in Inches (mm)

**S801+N_**

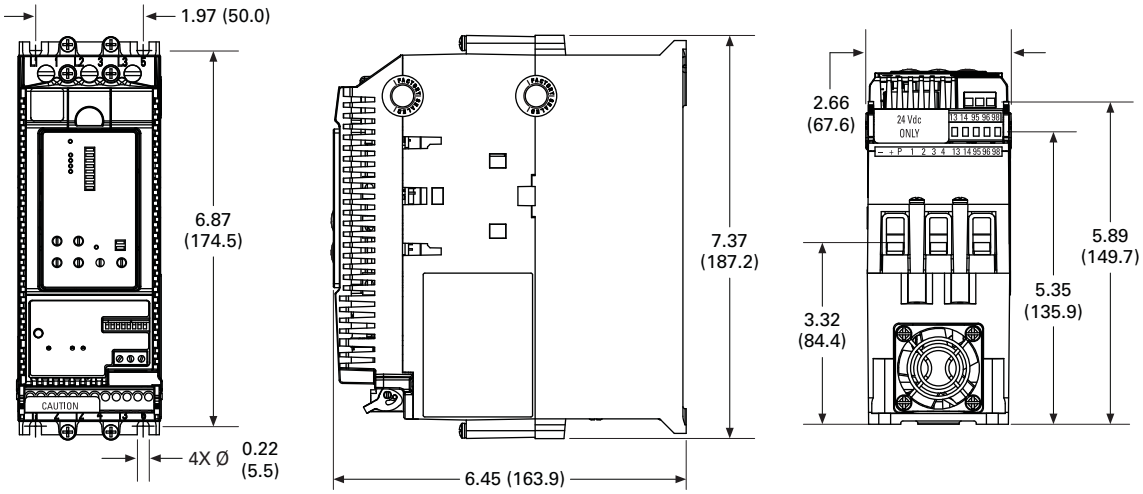


**S801+R_**

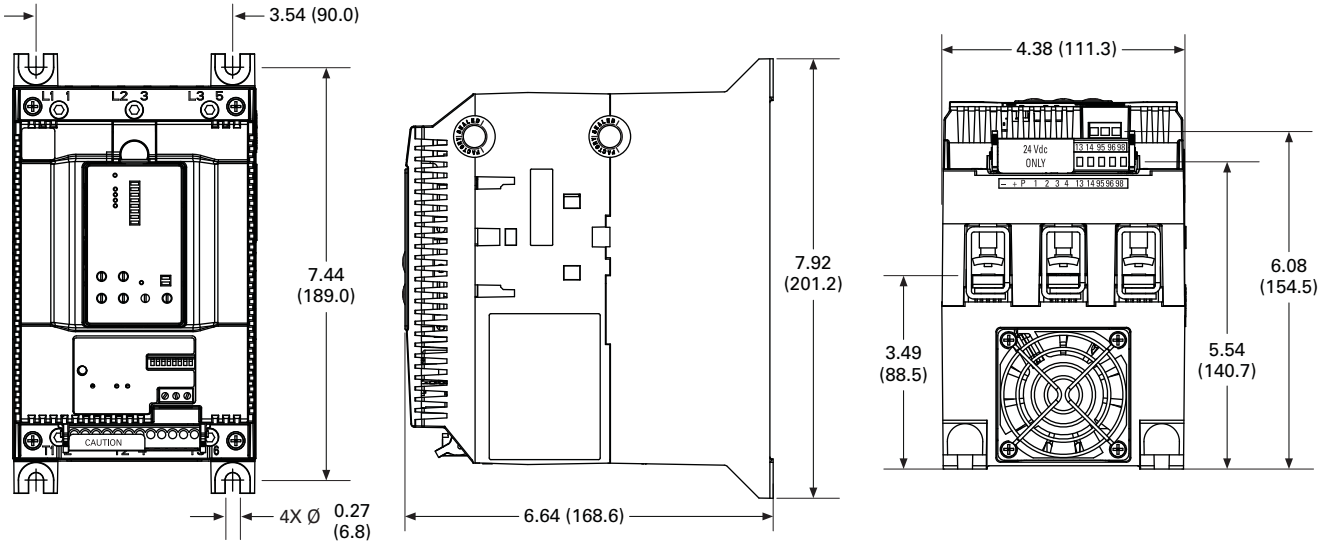

1

Approximate Dimensions in Inches (mm)

**S801+T_**

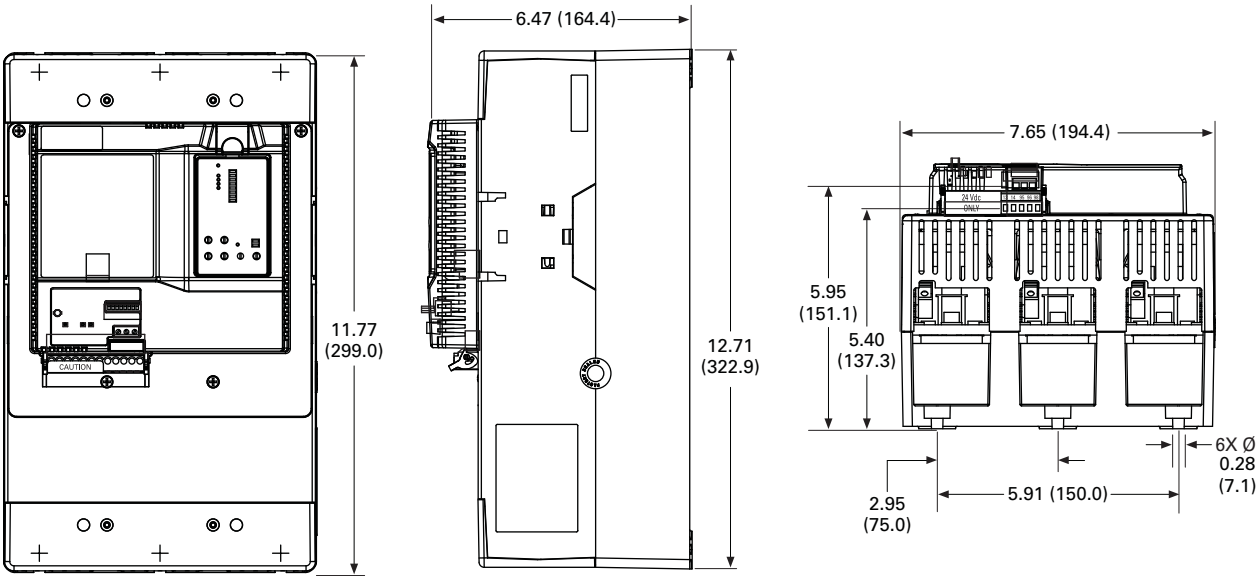


**S801+U_**

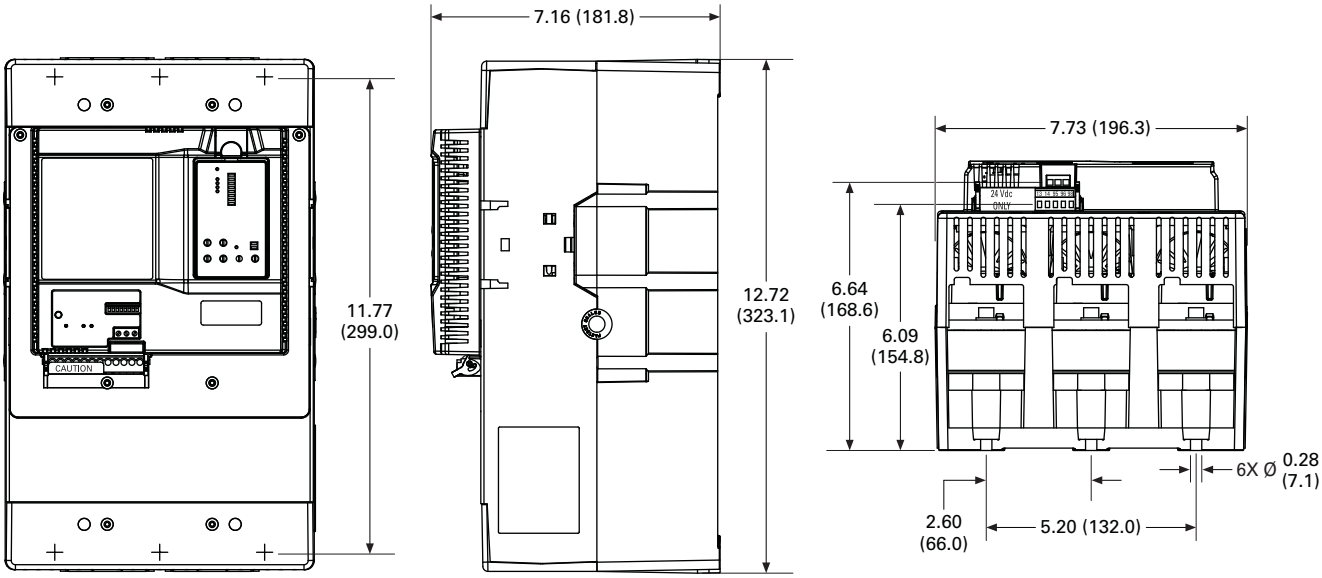

Approximate Dimensions in Inches (mm)

**S801+V_**

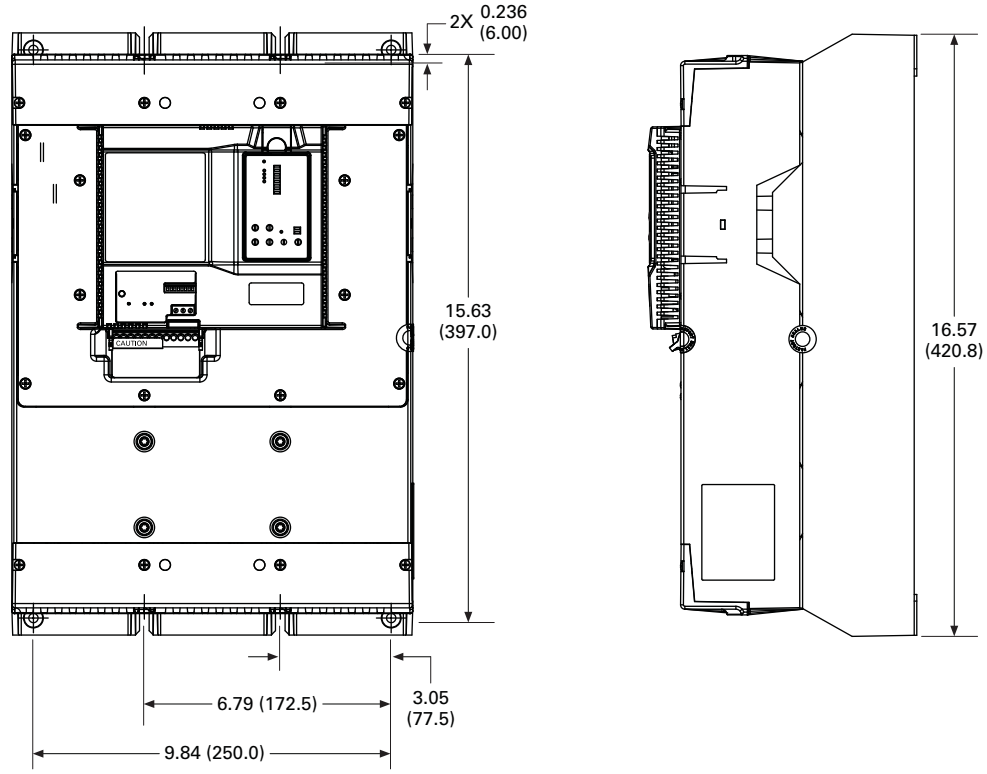


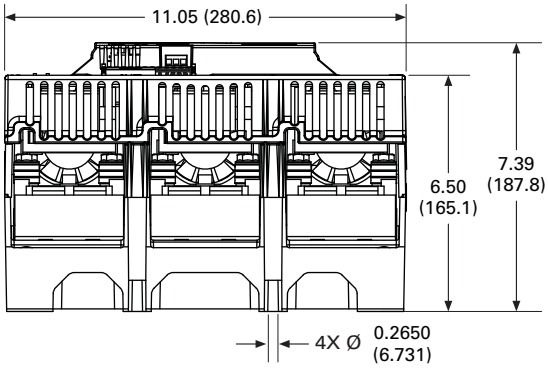

**Type S811+, Soft Starters with Digital Interface Module (DIM)**

## Contents


| *Description* | *Page* |
|---|---|
| Type S611, Solid-State Soft Starters | **V6-T1-43** |
| Type S801+, Soft Starters | **V6-T1-60** |
| Type S811+, Soft Starters with DIM | |
| Communications | **V6-T1-77** |
| Operation | **V6-T1-77** |
| Features and Benefits | **V6-T1-80** |
| Standards and Certifications | **V6-T1-84** |
| Instructional Leaflets | **V6-T1-84** |
| Catalog Number Selection | **V6-T1-84** |
| Product Selection | **V6-T1-85** |
| Accessories | **V6-T1-89** |
| Options | **V6-T1-90** |
| Technical Data and Specifications | **V6-T1-91** |
| Wiring Diagrams | **V6-T1-95** |
| Dimensions | **V6-T1-96** |


## Type S811+, Soft Starters with DIM

### Product Description

Eaton's S811+ offers all the popular features of the S801+ and adds new enhanced functionality with the new Digital Interface Module (DIM), communications, metering, monitoring and diagnostics capabilities.

Eaton's line of S811+ reduced voltage soft starters is very compact, multi-functional, easy to install and easy to set operating parameters. Designed to control the acceleration and deceleration of three-phase motors up to 690V, the line is available from 11A to 1000A.

The S811+ is designed to be a complete package, combining the silicon controlled rectifiers (SCRs), bypass contactor and overload in one, very compact unit. The S811+ is available as a component for panel mounting, in motor control centers or in enclosed control (NEMA Type 1, 3R, 4, 4X, 7/9 and 12).

### Application Description

Designed to control the acceleration and deceleration of three-phase motors, the S811+ soft starter uses SCRs to control the voltage to soft start and soft stop the motor. After the motor is started, internal run bypass contactors close, resulting in the motor running directly across-the-line. The built-in solid-state overload protects the motor from overload conditions with sophisticated algorithms that model true motor heating, resulting in better motor protection and fewer nuisance trips. Advanced protective and diagnostic features reduce downtime.

A voltage ramp start or current limit start is available. Kick start is available in either starting mode. The soft stop option allows for a ramp stop time that is longer than the coast to stop time. The pump control option in the S811+ Premium provides a smooth transition for starting and stopping a motor and eliminating the "water-hammer" effect that can damage pipes, valves and pumps.

The S811+ offers an impressive array of advanced protective features. Not only are the protective features selectable, but many offer variable settings and adjustable time delays to ride through system discrepancies. Protective features may also be set to Warning status to avoid nuisance trips.

The S811+ has an easy to use Digital Interface Module (DIM) that allows the user to configure the device and to read system parameters and monitor system values. The DIM includes an LCD display and keypad to scroll through the various menus. The DIM allows the user to modify control parameters, enable or disable protections, set communication variables, monitor system parameters such as line voltages and currents, and access the fault queue.

The DIM can be removed from the S811+ and be remote mounted. Kits are available to door mount the DIM, enabling users to safely configure, commission, monitor and troubleshoot the system at the electrical panel without opening the enclosure door. This will help eliminate the possibility of an arc flash incident.

### Digital Interface Module (DIM)

## Communications

The S811+ has native Modbus RTU communication capabilities. The S811+ may be connected to a variety of networks, including DeviceNet, Modbus TCP, EtherNet/IP and PROFIBUS.

The S811+ communication parameters can be configured with the DIM or through the Fieldbus using CH Studio Component Manager. Advanced communication configuration settings provide the system integrator with powerful tools to facilitate system optimization

### Communications Reference

| Description | Part Number |
|---|---|
| Modbus TCP Communication Adapter with 120 Vac I/O | **C441U** |
| Modbus TCP Communication Adapter with 24 Vdc I/O | **C441V** |
| EtherNet/IP Communication Adapter with 120 Vac I/O | **C441U** |
| EtherNet/IP Communication Adapter with 24 Vdc I/O | **C441V** |
| 85–264 Vac input, 24 Vdc output | **PSG240E** |
| 360–575 Vac input, 24 Vdc output | **PSG240F** |

## Operation

### *Starting and Stopping Modes*

The S811+ has a variety of starting and stopping methods to provide superior performance in the most demanding applications. The motor can be started in either voltage ramp start or current limit start mode. Kick start and soft stop are available within both starting modes. The user has the option to configure two independent start ramp profiles to accommodate variations in starting requirements.

### Voltage Ramp Start

Provides a voltage ramp to the motor resulting in a constant torque increase. The most commonly used form of soft start, this start mode allows you to set the initial torque value and the duration of the ramp to full voltage conditions. Bypass contactors close after ramp time.

- Adjustable initial torque 0–85% of locked rotor torque
- Adjustable ramp time 0.5–180 seconds (0.5–360 seconds with the S811+ Premium)

### Starting Characteristics—Ramp Start

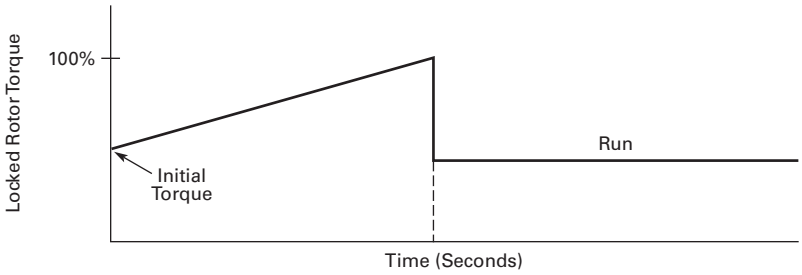

1

### Current Limit Start

Limits the maximum current available to the motor during the start phase. This mode of soft starting is used when it becomes necessary to limit the maximum starting current due to long start times or to protect the motor. This start mode allows you to set the maximum starting current as a percentage of locked rotor current and the duration of the current limit. Bypass contactors close after current limit time.

- Maximum current of 0–85% locked rotor current
- Adjustable ramp time 0.5–180 seconds (0.5–360 seconds with the S811+ Premium)

**Starting Characteristics—Current Limit Start**

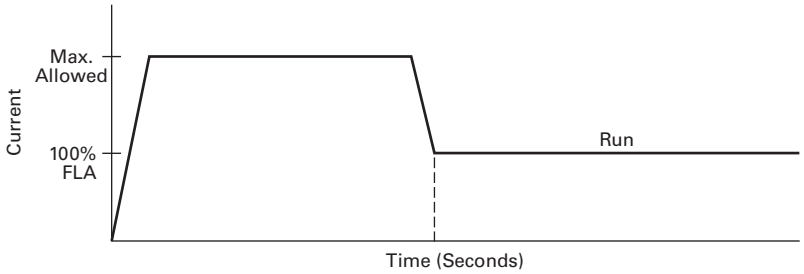


### Kick Start

Selectable feature in both voltage ramp start and current limit start modes. Provides a current and torque "kick" for 0 to 2.0 seconds. This provides greater initial current to develop additional torque to breakaway a high friction load.

- 0–85% of locked rotor torque
- 0–2.0 seconds duration

**Starting Characteristics—Kick Start**

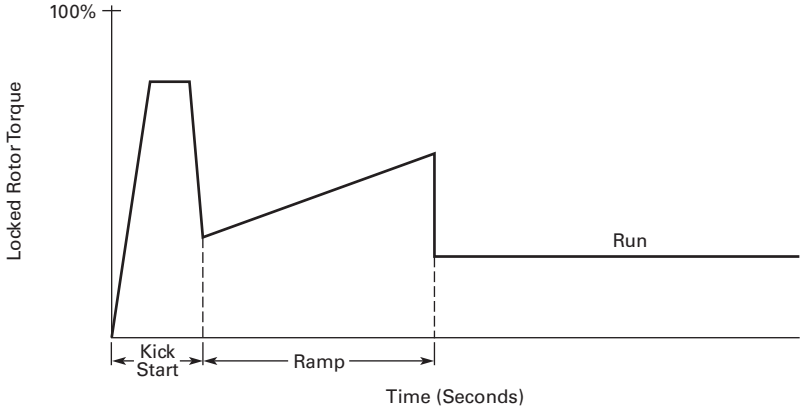


### Soft Stop

Allows for a controlled stopping of a load. Used when a stop-time that is greater than the coast-to-stop time is desired. Often used with high friction loads where a sudden stop may cause system or load damage.

- Stop time = 0–60 seconds

**Starting Characteristics—Soft Stop**

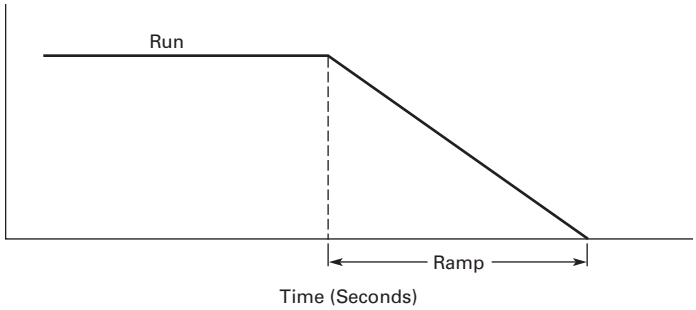

### *Edge and Level Sensing Control*

#### Edge Sensing

Edge sensing requires +24 Vdc power be momentarily applied to Control Terminal Block Pin 1 (with Terminal P at +24 Vdc) to initiate a start under all conditions. After a stop or fault occurs, the +24 Vdc must be removed, then reapplied to Terminal Pin 1 before another start can occur. This control configuration should be used when restarting of the motor after a fault or stop must be supervised manually or as a part of a control scheme. The cycling of +24 Vdc power to Terminal 1 Pin before starting is required regardless of the position of the auto reset switch on the DIM.

#### Level Sensing

Level sensing will enable a motor to restart after a fault is cleared without cycling +24 Vdc power to Terminal Pin 1 as long as:

- Terminal Pin P is supplied with +24 Vdc (to start from Control Terminal Block, Terminal Pin 3 must also be enabled)
- The auto reset switch on the DIM is set to enabled
- All faults have been reset

This control configuration should be used where it is desirable to restart a motor after a fault without additional manual or automatic control. An example of this condition would be on a remote pumping station where it is desirable to automatically restart a pump after a power outage without operator intervention.

**Note:** If the auto reset feature is used, CAUTION must be exercised to ensure that any restart occurs in a safe manner.

## Features and Benefits

- Communication capabilities with various protocols
- The Digital Interface Module (DIM) provides an intuitive, easy-to-use human interface with powerful configuration capabilities to maximize system performance
- Door or device mounted DIM enables users to safely configure, commission, monitor and troubleshoot the system at the electrical panel without opening the enclosure door, eliminating the possibility of an arc flash incident
- System operating parameters can be monitored enterprise-wide through a communications network. Increase uptime by providing data for process management and preventive diagnostics
- Run internal bypass mode greatly reduces internal heating created by the greater power dissipation in the SCRs. Bypass contactor directly connects the motor to the line and improves system efficiency by reducing internal power losses
- Internal solid-state overload protection provides accurate current measurement and trip settings. Sophisticated algorithms solve a series of differential equations that model true motor heating and cooling, resulting in superior motor overload protection while minimizing nuisance trips. Advanced selectable protective features safeguard the motor and system against a variety of system faults
- Internal run bypass contactors and overload protection eliminate the need for additional devices, reducing enclosure sizes, minimizing installation and wiring time, and reducing overall assembly size and cost
- Wide range of overload FLA settings (31–100% of rated current) and a selectable trip class (5–30) offers users the flexibility to fine tune the starter to match specific application requirements
- Variable ramp times and torque control settings provide unlimited starting configurations, allowing for maximum application flexibility
- Kick-start feature enables soft starting of high friction loads
- Soft stop control for applications where an abrupt stop of the load is not acceptable
- The S811+ Premium with sophisticated pump control algorithms on both starting and stopping that minimize the pressure surges that cause water hammer. The pump control feature will maximize the life of the pump and piping systems while minimizing the downtime caused by system failure
- Six SCRs control all three motor phases, providing smooth acceleration and deceleration performance
- Soft acceleration and deceleration reduces wear on belts, gears, chains, clutches, shafts and bearings
- Reduce the peak inrush current's stress on the power system
- Manage peak starting torque to diminish mechanical system wear and damage
- 24 Vdc control voltage enhances personnel and equipment safety
- Removable, lockable control terminal block reduces maintenance costs. Also provides the opportunity for OEMs to reduce assembly and test costs by utilizing pre-assembled wire harnesses

### Motor Wiring Configuration User Selectable Inline or Inside-the-Delta

Mains Motor Wiring Configuration is accomplished by simply selecting the required configuration from a menu. This feature allows adaptability from one configuration to another without any additional programming operations and reduces inventory levels by not having to stock both configurations.

### Modbus Native Communications Protocol

Modbus RTU communications in now standard on all S811+ units. This allows users to quickly configure the unit for network communications using a common protocol. Adapters are available for users who prefer to use EtherNet/IP or Modbus TCP protocols.

### Programmable Control Terminal Block Functionality

Four programmable terminals on the S811+ enable the user to expand functionality with options such as a second start ramp profile, externally triggered trip or warning functions, analog inputs, and others, in addition to the normal start, stop, reset, and so on, functions.

### Second Start Ramp Profile Capability

A second start ramp profile may be configured for the soft starter. This profile is independent of the primary profile and retains all the parameter options such as start time and initial torques. With a signal at a terminal programmed for this feature, the second profile may be selected by a pushbutton station or a network.

### Alarm-No-Trip Functionality

Some applications require the ability to effectively disable most protections with the intent of enabling the RVSS unit to control a motor under the most severe operating conditions characterized by current or voltage imbalances, high or low value deviations, or other fault conditions. This function causes the S811+ to ignore most fault trip conditions and continue operation of the application.

### Digital Interface Module (DIM) Cloning

For OEMs or other users that desire to load identical parameter settings into multiple RVSS units, the DIM may be used to extract and duplicate parameter settings from one RVSS and loaded into other units, saving time, effort, and reducing chances for errors while programming.

***Protective Features***

All protective features can be configured, enabled or disabled with the DIM or through the communications network.

**Motor Overload**

The S811+ includes electronic overload protection as standard. The overload meets applicable requirements for a motor overload protective device. The overload protects the motor from over heat conditions with the use of sophisticated algorithms that model true motor heating, resulting in superior motor protection and fewer nuisance trips.

The S811+ calculates a thermal memory value based on the heat energy introduced into the motor during the start process. A 100% value represents the maximum safe internal temperature of the motor.

When the thermal memory value reaches 100%, an overload trip will occur removing power to the motor. Upon trip, the S811+ stores the calculated motor heating value and will not allow a motor re-start until the motor has a thermal memory value of less than 100%. This feature ensures the motor will not be damaged by repeated overload trip, reset and re-start cycles.

The thermal memory value can be monitored through the DIM or the communications network. The thermal memory value can be of great use in determining an impending overload trip condition.Alarms can be implemented in the process monitoring system warning of an impending trip before a trip occurs halting the process. Costly system downtime can be avoided.

The trip current is adjusted to match the specific application requirements by entering the motor nameplate full load current rating and trip class. The FLA parameter is adjustable from 32% to 100% of the unit's rated current. The overload trip class is adjustable from class 5 through class 30. The overload is ambient temperature compensated—meaning its trip characteristics will not vary with changes in ambient temperature. The overload protection can be enabled, disabled, or disabled on start.

**Short Circuit**

The use of a short-circuit protective device in coordination with the S811+ is required in branch motor circuits by most electrical codes. Short-circuit coordination ratings with both fuses and Eaton molded case circuit breakers are available providing customers with design flexibility. The S811+ has short-circuit coordination ratings as an open component, an enclosed starter, and in a motor control center.

**External E-Stop**

Emergency Stop functionality may be triggered from an external source. Removal of the 24 Vdc signal from a terminal configured for E-Stop will initiate an E-Stop action. The External E-Stop option is useful in applications where it is desirable to accomplish a motor shutdown in the event that an external condition(s) exist that will damage system components and/or product flows or operations.

**External Trip**

External Trip functionality may be triggered from an external source. Removal of the 24 Vdc signal from a terminal configured for External Trip will initiate an External Trip action. The External Trip option is useful in applications where it is desirable to accomplish a motor stop in the event that an external condition(s) exist that will damage system components and/or product flows or operations.

**Fault Warning Functionality**

Selected protection parameters may be assigned to provide a Fault Warning instead of a Fault Trip with user adjustable set points. When a Fault Warning condition is detected, the fault condition is reported via the DIM, network connection, or an auxiliary relay configured for this function. The soft starter remains in operation. At such time the fault condition no longer exists, the Fault Warning message will be extinguished.

**External Warning**

The S811+ will accept a Warning signal from an external source or device. In a fashion similar to the Fault Warning, the fault condition is reported via the DIM, network connection, or an auxiliary relay configured for this function. The soft starter remains in operation. At such time the fault condition no longer exists, the Fault Warning message will be extinguished.

**Custom Fault/Warning Auxiliary Relays**

Up to three fault and/or warning codes may be selected to operate an auxiliary relay configured to operate when any of these codes are detected. This option enables the user to provide external warnings or fault indications to increase monitoring effectiveness and to provide additional system control.

**Motor Power**

Motor Power can be not only be monitored, but trip levels can be adjusted to provide indications of system malfunctions or operating discrepancies. Both High and Low Power thresholds can be set to provide Fault Warning or Fault Trip functions. Additionally, fault delays times may be set to up to 60 seconds.

**Analog Input**

An input control terminal may be configured to accept a 0–20 mA DC signal with range scaling. This feature enables the S811+ to respond to an external device that may be monitoring a critical component or process and provides Fault Trip or Fault Warning capability to protect operating systems and processes.

**Start Delay**

Three start delay timers are available to enhance motor protection or to provide simple logic functions to coordinate motor control with other devices in the system. The timers will allow delays from 24 Vdc power up, receipt of a valid START command, or a delay in switch from one start ramp profile to another.

### Jam

Excessive current and torque up to locked rotor levels can occur in a jam condition. The condition can result in stress and damage to the motor, load, mechanical system, and the electrical distribution system. Jam protection prevents the stress and damage from a jam during normal run. After the motor is in bypass, a current greater than 300% FLA setting will cause the starter to trip on a jam fault.

### Stall

Excessive current and torque up to locked rotor levels can occur in a stall condition. The condition can lead to an overload trip and result in stress and damage to the motor, load, mechanical system, and the electrical distribution system. Stall protection prevents stress and damage to a motor that has not come up to speed during the soft start time. The S811+ will trip to protect the system in the event that the motor did not get to the rated speed in the defined soft start period. A current greater than 200% FLA at the end of the soft start period will cause the starter to trip on a stall fault.

### Pole Over Temperature

High ambient temperatures, extended ramp times and high duty cycle conditions may cause the S811+ power pole conductors to reach a temperature that exceeds their thermal rating. The S811+ is equipped with sensors that monitor the temperature of the power poles. Over temperature protection occurs if the power pole's thermal capacity is exceeded. The soft starter will trip in over temperature conditions, preventing device failure.

Each power pole temperature value can be monitored through the DIM or the communications network. This feature can be of use in determining an impending over temperature trip condition.

When using a communications network, alarms can be implemented in the process monitoring system warning of an impending trip before the trip occurs, halting the process.

### Phase Loss

Loss of a phase can cause a significant increase in the current drawn in the remaining two phases. Phase loss can lead to motor damage before an eventual overload trip occurs. Phase loss is typically an indication of a failure in the electrical distribution system. The S811+ will detect a phase loss and trip if any phase current drops below a preset value. The phase loss trip level is adjustable from 0% to 100% of the average of the other two phase levels with an adjustable trip delay of 0.1 to 60 seconds.

### Phase Imbalance

Phase current or voltage imbalance can cause a significant increase in the current drawn in the remaining two phases. Phase imbalance can lead to motor damage before an eventual overload trip. Phase imbalance is typically an indication of a failure in the electrical distribution system or the motor. The S811+ will detect both current and voltage phase imbalances and trip if any phase becomes imbalanced as compared to the average of the other two phases.

The phase current imbalance trip level is adjustable from 0% to 100% of the average of the current in the other two phases with an adjustable trip delay of 0.1 to 60 seconds.

The phase voltage imbalance trip level is adjustable from 0% to 100% of the average of the voltage in the other two phases with an adjustable trip delay of 0.1 to 60 seconds.

### Reset Mode

The S811+ can be set up for automatic or manual reset on trip. The manual reset mode requires the operator to physically press the RESET button located on the soft starter. The trip can be manually reset through the DIM or through the communications network. The trip can also be electrically reset by energizing a 24 Vdc input on the control terminal block.

The automatic reset mode allows the soft starter to be automatically reset as soon as the trip condition is no longer present. With the automatic reset mode, after the fault is no longer present, the motor will be restarted as soon as a valid start signal is present.

### Phase Reversal

The S811+ can determine if the proper line phase sequence is present by default. The device will trip if the line phase sequence is something other than A-B-C. The S811+ can be configured to operate under reversed phase conditions (A-C-B).

### Shorted SCR Detection

The S811+ monitors the operation of the power poles and will trip under a shorted SCR condition.

### Open SCR Detection

The S811+ monitors the operation of the power poles and will trip under an open SCR condition.

### Low Current

Low current conditions can be a result of a loss of load or a failure in the mechanical system. The S811+ has low current protection that will trip if the average rms current falls below a preset value. The low current protection can be programmed as a percent of motor FLA from 0% to 100%.

### Low Voltage

Low voltage conditions can result from disturbances in the electrical power distribution system. Low voltage conditions can cause a malfunction and damage to electrical equipment. The S811+ has low voltage protection that will trip if the average rms voltage falls below a preset value. The low voltage protection can be programmed as a percent of nominal voltage from 1% to 99% with a trip delay of 0.1 to 60 seconds to accommodate short temporary voltage drops during the start process.

### High Voltage

High voltage conditions can result from disturbances in the electrical power distribution system. High voltage conditions can cause malfunctions or failures of electrical equipment. The S811+ has high voltage protection that will trip if the average rms voltage is greater than a preset value. The high voltage protection can be programmed as a percent of nominal voltage from 101% to 120% with a trip delay of 0.1 to 60 seconds.

***Monitoring Capabilities***

The S811+ has an impressive array of system monitoring capabilities that allows users to access real time process and diagnostic data. This data can be viewed at the device with the DIM or through a communications network. Data over a communications network can provide valuable insight into the condition of the equipment and processes. Maintenance and production personnel can monitor critical operational and maintenance data from a central control station that can be located far away from the production facility. Process data can be monitored to determine system anomalies that may indicate a need for preventive maintenance or an impeding failure. Adjustments made through the communications network can reduce costs by minimizing the time traveling to the location where the motor controls are located. When faults do occur, real time fault data can assist maintenance in trouble-shooting and planning repair resources. Remote reset signals can be given to tripped devices without the need for manual intervention by maintenance personnel.

**Average Line Current**

Provides the average of the three-phase rms line currents in amps, accurate to within 2%. Current data can be used to indicate a need for maintenance. Increased currents in a fixed load application can indicate a reduction in system efficiencies and performance, signifying system maintenance is due.

**Average Pole Current**

Provides the average of the three-phase rms pole currents in amps, accurate to within 2%. The pole current is the current through the soft starter. The line and pole current will be identical in inline applications, and will differ in inside-the-delta applications.

**Average Line Current as a % FLA**

Provides the average rms line current as a percentage of the S811+ FLA setting.

**Three-Phase Line Currents**

Provides three rms phase line currents in amps, accurate to within 2%. Imbalances or changes in the relative phase current to one another can indicate anomalies in the motor or electrical distribution system.

**Three-Phase Pole Currents**

Provides three rms phase pole currents in amps, accurate to within 2%. The pole current is the current through the soft starter. The line and pole current will be identical in in-line applications, and will differ in inside-the-delta applications.

**Three-Phase Line Voltages**

Provides the individual rms three-phase line voltages. Imbalances or changes in |the relative phase voltage to one another can indicate anomalies in the motor or electrical distribution system. Voltage can be used to monitor electrical distribution system performance. Warnings, alarms and system actions to low or high voltage conditions can be implemented.

**Percent Thermal Memory**

Provides the real time calculated thermal memory value. The S811+ calculates thermal memory value. A 100% value represents the maximum safe internal temperature of the motor. When the thermal memory value reaches 100%, an overload trip will occur, removing power to the motor.

The thermal memory value can be of great use in determining an impending overload trip condition. When using a communications network, alarms can be implemented in the process monitoring system warning of an impending trip before the trip occurs, halting the process. Costly system downtime can be avoided.

**DC Control Voltage**

Monitors level of the 24 Vdc control voltage. Fluctuations in control voltage can cause component malfunction and failure. System control voltage data can be used to implement warnings, alarms and system actions to low or high voltage conditions.

**Pole Temperature**

Increases in power pole temperature are caused by increases in ambient temperature, start/stop times and start duty cycles. Changes in pole temperatures represent a change in system operating conditions. Identifying unexpected operating conditions or changes can prompt maintenance and aid in process evaluation activities.

**PCB Device Temperature**

An increase in printed circuit board (PCB) device temperature is a strong indication of an increase in ambient temperature. High ambient temperature operation can be identified with the device temperature data. Device temperature increases can be due to undersized enclosures, failure of cooling fans or blocked venting. High operating temperatures will reduce the life of all electrical equipment in the enclosure.

**Start Count**

Start count data can be used to monitor system output, schedule preventative maintenance, identify system anomalies and identify changes in system operation.

**Average Line Power**

Provides the average of the three-phase line power in kilowatts, accurate to 5%. Power data may be used to monitor power transmitted to the load. Increased power demand may indicate degraded system components or connections. Additionally, such data is useful in determine power utilization in branch circuits consisting of multiple loads.

**Power Factor**

Provides the three-phase power factor value, accurate to 5%. The power factor of the circuit may be used to identify circuit conditions that may need to be corrected due to low power factor indications. Low circuit power factor can indicate improper or degraded components.

1

### *Diagnostics*

#### Fault Queue

Current fault and a fault queue containing the last nine system faults can be read through the DIM or communications network. Fault identification can minimize troubleshooting time and cost, and prevent arc flash incidents. The fault queue can be remotely accessed through a communications network to assist in planning maintenance resources. Thirty (30) different faults can be identified by the S811+.

#### Control Status

The S811+ provides data that represents system conditions that can be read through the DIM or the communications network. This data identifies the status of the system and the control commands the system is requesting of the S811+. This can be used for advanced troubleshooting and system integration activities.

#### Breaker Status

The S811+ has provisions to read and display circuit breaker status. Eaton communicating cover control or other communicating protective device is required to take advantage of this feature.

### Standards and Certifications

- IEC 60947-4-2
- EN 60947-4-2
- UL listed (NMFT-E202571) S811+N37_ through S811+V85_
- UL recognized (NMFT2) S811+V10_
- CE marked
- CSA certified (3211 06)
- CSA elevator (2411 01)

### Instructional Leaflets

- User manual MN03900001E
- Outline drawings:
  - S811+N_: 10-8574
  - S811+R_: 10-8575
  - S811+T_: 10-8576
  - S811+U_: 10-8857
  - S811+V_: 10-8577

### Catalog Number Selection

#### S811+ Open Soft Starters ①

**S 811+ T 30 N 3 S**

**S** = Soft starter

**811+** = Non-combination soft starter

**Frame Size** ②
- **N** = 65 mm
- **R** = 110 mm
- **T** = 200 mm
- **U** = 200 mm
- **V** = 290 mm

**Options**
- **N** = No options ④
- **P** = Premium, 600V rated ⑤
- **V** = Premium, 690V rated (S811+T18V35 through S811+V85V35) ⑥⑦

**Number of Poles**
- **3** = Three-pole device

**S** = Standard soft starter

**Ampere Rating**

| | | |
|---|---|---|
| **37** = 37A | **24** = 240A | **65** = 650A |
| **66** = 66A | **30** = 304A | **72** = 720A |
| **10** = 105A | **36** = 360A | **85** = 850A |
| **13** = 135A | **42** = 420A | **10** = 1000A |
| **18** = 180A | **50** = 500A ③ | |

***Notes***

① All units require a 24 Vdc power supply found on catalog **Page V6-T1-89**, or equivalent.
② S811+T_, S811+U_ and S811+V_ units require lug kits found on **Page V6-T1-89**.
③ S811+U50_ unit does not have IEC certification.
④ Level/Edge Sense, Inline or Inside-the-Delta wiring configuration.
⑤ Level/Edge Sense, Inline or Inside-the-Delta wiring configuration, pump control and extended ramp.
⑥ Not available in S811+U_.
⑦ Level/Edge Sense, Inline wiring configuration, pump control, extended ramp.

## Product Selection

### Standard Duty Ratings

| Starting Method | Ramp Current % of FLA | Ramp Time Seconds | Starts per Hour | Ambient Temperature |
|---|---|---|---|---|
| Soft start | 300% | 30 sec. | 3 | 50°C |
| Full voltage | 500% | 10 sec. | 3 | 50°C |
| Wye-delta | 350% | 20 sec. | 3 | 50°C |
| 80% RVAT | 480% | 20 sec. | 2 | 50°C |
| 65% RVAT | 390% | 20 sec. | 3 | 50°C |
| 50% RVAT | 300% | 20 sec. | 4 | 50°C |

Motor applications and customer needs come in many different varieties. With the standard and severe duty rating tables, we have attempted to provide guidelines on what the soft starter is capable of. If the application falls under these categories, you can use these charts. For other applications, or when a question arises, consult with your local Eaton representative or call our Technical Resource Center.

**S811+**

### Standard Duty—15 Second Ramp, 300% Current Limit at 40°C, Inline Connection

| | Three-Phase Motors | | | | | | | | | | | |
|---|---|---|---|---|---|---|---|---|---|---|---|---|
| | kW Rating (50 Hz) | | | hp Rating (60 Hz) | | | | | | | | |
| | | | | 200V | | 230V | | 460V | | 575–690V ① | | |
| Max. Current | 230V | 380–400V | 440V | 1.0SF | 1.15SF | 1.0SF | 1.15SF | 1.0SF | 1.15SF | 1.0SF | 1.15SF | Catalog Number |
| **Frame Size N** | | | | | | | | | | | | |
| 37 | 10 | 18.5 | 18.5 | 10 | 10 | 10 | 10 | 25 | 20 | 30 | 30 | **S811+N37N3S** |
| 66 | 18.5 | 30 | 37 | 20 | 15 | 20 | 20 | 50 | 40 | 60 | 50 | **S811+N66N3S** |
| **Frame Size R** | | | | | | | | | | | | |
| 105 | 30 | 55 | 59 | 30 | 25 | 40 | 30 | 75 | 60 | 100 | 75 | **S811+R10N3S** |
| 135 | 40 | 63 | 80 | 40 | 30 | 50 | 40 | 100 | 75 | 125 | 100 | **S811+R13N3S** |
| **Frame Size T** | | | | | | | | | | | | |
| 180 | 51 | 90 | 110 | 60 | 50 | 60 | 60 | 150 | 125 | 150 | 150 | **S811+T18N3S** |
| 240 | 75 | 110 | 147 | 75 | 60 | 75 | 75 | 200 | 150 | 200 | 200 | **S811+T24N3S** |
| 304 | 90 | 160 | 185 | 100 | 75 | 100 | 100 | 250 | 200 | 300 | 250 | **S811+T30N3S** |
| **Frame Size U** | | | | | | | | | | | | |
| 360 | 110 | 185 | 220 | 125 | 100 | 150 | 125 | 300 | 250 | 350 | 300 | **S811+U36N3S** |
| 420 | 129 | 220 | 257 | 150 | 125 | 175 | 150 | 350 | 300 | 450 | 350 | **S811+U42N3S** |
| 500 | 150 | 257 | 300 | 150 | 150 | 200 | 150 | 400 | 350 | 500 | 450 | **S811+U50N3S** ② |
| **Frame Size V** | | | | | | | | | | | | |
| 360 | 110 | 185 | 220 | 125 | 100 | 150 | 125 | 300 | 250 | 350 | 300 | **S811+V36N3S** |
| 420 | 129 | 220 | 257 | 150 | 125 | 175 | 150 | 350 | 300 | 450 | 350 | **S811+V42N3S** |
| 500 | 150 | 257 | 300 | 150 | 150 | 200 | 150 | 400 | 350 | 500 | 450 | **S811+V50N3S** |
| 650 | 200 | 355 | 425 | 250 | 200 | 250 | 200 | 500 | 450 | 600 | 500 | **S811+V65N3S** |
| 720 | 220 | 400 | 450 | — | — | 300 | 250 | 600 | 500 | 700 | 600 | **S811+V72N3S** |
| 850 | 257 | 475 | 500 | — | — | 350 | 300 | 700 | 600 | 900 | 700 | **S811+V85N3S** |
| 1000 | 277 | 525 | 550 | — | — | 400 | 350 | 800 | 700 | 900 | 800 | **S811+V10N3S** |

***Notes***

① 690V is available only from S811+T18V3S through S811+V85V3S. Not available on S811+U…V3S.

② S811+U5O_ rating does not have IEC certification.

1

***Severe Duty***

## Severe Duty Ratings

| Starting Method | Ramp Current % of FLA | Ramp Time Seconds | Starts per Hour | Ambient Temperature |
|---|---|---|---|---|
| Soft start | 450% | 30 sec. | 4 | 50°C |
| Full voltage | 500% | 10 sec. | 10 | 50°C |
| Wye-delta | 350% | 65 sec. | 3 | 50°C |
| 80% RVAT | 480% | 25 sec. | 4 | 50°C |
| 65% RVAT | 390% | 40 sec. | 4 | 50°C |
| 50% RVAT | 300% | 60 sec. | 4 | 50°C |

Severe duty ratings are defined as any combination of parameters that exceed the standard duty ratings where the ramp time is over 30 seconds, and/or the number of starts per hour exceeds 4, and/or the current limit set is over 300%. *Example:* 35-second ramp, 5 starts per hour, 350% current limit at 40°C ambient.

**S811+**

## Severe Duty—30 Second Ramp and/or 450% Current Limit at 50°C, Inline Connection

| | Three-Phase Motors | | | | | | | | | | | |
|---|---|---|---|---|---|---|---|---|---|---|---|---|
| | kW Rating (50 Hz) | | | hp Rating (60 Hz) | | | | | | | | |
| | | | | 200V | | 230V | | 460V | | 575–690V ① | | |
| Max. Current | 230V | 380–400V | 440V | 1.0SF | 1.15SF | 1.0SF | 1.15SF | 1.0SF | 1.15SF | 1.0SF | 1.15SF | Catalog Number |
| **Frame Size N** | | | | | | | | | | | | |
| 22 | 5.5 | 10 | 11 | 5 | 5 | 7-1/2 | 5 | 15 | 10 | 20 | 15 | **S811+N37N3S** |
| 42 | 11 | 18.5 | 22 | 10 | 10 | 15 | 10 | 30 | 25 | 40 | 30 | **S811+N66N3S** |
| **Frame Size R** | | | | | | | | | | | | |
| 65 | 15 | 30 | 33 | 15 | 15 | 20 | 15 | 50 | 40 | 50 | 50 | **S811+R10N3S** |
| 80 | 22 | 40 | 45 | 25 | 20 | 30 | 25 | 60 | 50 | 75 | 60 | **S811+R13N3S** |
| **Frame Size T** | | | | | | | | | | | | |
| 115 | 33 | 59 | 63 | 30 | 30 | 40 | 30 | 75 | 75 | 100 | 100 | **S811+T18N3S** |
| 150 | 45 | 80 | 90 | 50 | 40 | 50 | 50 | 100 | 100 | 150 | 125 | **S811+T24N3S** |
| 192 | 55 | 100 | 110 | 60 | 50 | 75 | 60 | 150 | 125 | 200 | 150 | **S811+T30N3S** |
| **Frame Size U** | | | | | | | | | | | | |
| 240 | 75 | 110 | 147 | 75 | 60 | 75 | 75 | 200 | 150 | 200 | 200 | **S811+U36N3S** |
| 305 | 90 | 160 | 185 | 100 | 75 | 100 | 100 | 250 | 200 | 300 | 250 | **S811+U42N3S** |
| **Frame Size V** | | | | | | | | | | | | |
| 240 | 75 | 110 | 147 | 75 | 60 | 75 | 75 | 200 | 150 | 200 | 200 | **S811+V36N3S** |
| 305 | 90 | 160 | 185 | 100 | 75 | 100 | 100 | 250 | 200 | 300 | 250 | **S811+V42N3S** |
| 365 | 110 | 185 | 220 | 125 | 100 | 150 | 125 | 300 | 250 | 350 | 300 | **S811+V50N3S** |
| 420 | 129 | 220 | 257 | 150 | 125 | 150 | 150 | 350 | 300 | 450 | 350 | **S811+V65N3S** |
| 480 | 147 | 257 | 295 | 150 | 150 | 200 | 150 | 400 | 350 | 500 | 450 | **S811+V72N3S** |
| 525 | 160 | 280 | 335 | 150 | 150 | 200 | 150 | 450 | 350 | 500 | 450 | **S811+V85N3S** |
| 575 | 172 | 303 | 370 | 200 | 150 | 250 | 200 | 500 | 450 | 600 | 500 | **S811+V10N3S** |

***Note***

① 690V is available only from S811+T18V3S through S811+V85V3S. Not available on S811+U…V3S.

### *Inside-the-Delta Standard Duty Ratings*

**S811+**

## Standard Duty—15 Second Ramp, 300% Current Limit at 40°C, Inside-the-Delta Connection

| Max. Continuous Motor Line Current | Three-Phase Motor kW Rating (50 Hz) | | | hp Rating (60 Hz) | | | | | | | | Catalog Number |
|---|---|---|---|---|---|---|---|---|---|---|---|---|
| | | | | 200V | | 230V | | 460V | | 575V | | |
| | 230V | 380–400V | 440V | 1.0SF | 1.15SF | 1.0SF | 1.15SF | 1.0SF | 1.15SF | 1.0SF | 1.15SF | |
| **Frame Size N** | | | | | | | | | | | | |
| 65 | 10 | 18.5 | 18.5 | 15 | 15 | 15 | 15 | 40 | 30 | 50 | 50 | **S811+N37N3S** |
| 114 | 18.5 | 30 | 37 | 30 | 25 | 30 | 30 | 75 | 60 | 100 | 75 | **S811+N66N3S** |
| **Frame Size R** | | | | | | | | | | | | |
| 182 | 30 | 55 | 59 | 50 | 40 | 60 | 50 | 125 | 100 | 150 | 125 | **S811+R10N3S** |
| 234 | 40 | 63 | 80 | 60 | 50 | 75 | 60 | 150 | 125 | 200 | 150 | **S811+R13N3S** |
| **Frame Size T** | | | | | | | | | | | | |
| 311 | 51 | 90 | 110 | 100 | 75 | 100 | 100 | 250 | 200 | 250 | 250 | **S811+T18N3S** |
| 415 | 75 | 110 | 147 | 125 | 100 | 125 | 125 | 300 | 250 | 300 | 300 | **S811+T24N3S** |
| 526 | 90 | 160 | 185 | 150 | 125 | 150 | 150 | 400 | 300 | 400 | 400 | **S811+T30N3S** |
| **Frame Size U** | | | | | | | | | | | | |
| 623 | 110 | 185 | 220 | 200 | 150 | 250 | 200 | 450 | 400 | 550 | 450 | **S811+U36N3S** |
| 727 | 129 | 220 | 257 | 250 | 200 | 300 | 250 | 550 | 450 | 700 | 550 | **S811+U42N3S** |
| 865 | 150 | 257 | 300 | 250 | 250 | 300 | 250 | 600 | 550 | 750 | 700 | **S811+U50N3S** ①② |
| **Frame Size V** | | | | | | | | | | | | |
| 623 | 110 | 185 | 220 | 200 | 150 | 250 | 200 | 450 | 400 | 550 | 450 | **S811+V36N3S** |
| 727 | 129 | 220 | 257 | 250 | 200 | 300 | 250 | 550 | 450 | 700 | 550 | **S811+V42N3S** |
| 865 | 150 | 257 | 300 | 250 | 250 | 300 | 250 | 600 | 550 | 750 | 700 | **S811+V50N3S** |
| 1125 | 200 | 355 | 425 | 400 | 300 | 400 | 300 | 750 | 700 | 900 | 750 | **S811+V65N3S** |
| 1246 | — | — | — | — | — | — | — | — | — | — | — | **S811+V72N3S** |
| 1471 | — | — | — | — | — | — | — | — | — | — | — | **S811+V85N3S** |
| — | — | — | — | — | — | — | — | — | — | — | — | **S811+V10N3S** |

***Notes***

① 15 sec. start, 300% inrush, 40°C, 1 start every 15 minutes. If these start parameters are exceeded, please refer to S811+V50_.

② S811+U50_ unit does not have IEC certification.

1

### *Inside-the-Delta Severe Duty Ratings*

Severe duty ratings are defined as any combination of parameters that exceed the standard duty ratings where the ramp time is over 30 seconds, and/or the number of starts per hour exceeds 4, and/or the current limit set is over 300%.

Example: 35-second ramp, 5 starts per hour 350% current limit at 40°C ambient.

**S811+**

## Severe Duty—30 Second Ramp and/or 450% Current Limit at 50°C, Inside-the-Delta Connection

| Max. Continuous Motor Line Current | Three-Phase Motor kW Rating (50 Hz) 230V | 380–400V | 440V | hp Rating (60 Hz) 200V 1.0SF | 200V 1.15SF | 230V 1.0SF | 230V 1.15SF | 460V 1.0SF | 460V 1.15SF | 575V 1.0SF | 575V 1.15SF | Catalog Number |
|---|---|---|---|---|---|---|---|---|---|---|---|---|
| **Frame Size N** | | | | | | | | | | | | |
| 39 | 5.5 | 10 | 11 | 7-1/2 | 7-1/2 | 10 | 7-1/2 | 25 | 15 | 30 | 25 | **S811+N37N3S** |
| 73 | 11 | 18.5 | 22 | 15 | 15 | 25 | 15 | 50 | 40 | 60 | 50 | **S811+N66N3S** |
| **Frame Size R** | | | | | | | | | | | | |
| 111 | 15 | 30 | 33 | 25 | 25 | 30 | 25 | 75 | 60 | 75 | 75 | **S811+R10N3S** |
| 138 | 22 | 40 | 45 | 40 | 30 | 50 | 40 | 100 | 75 | 120 | 100 | **S811+R13N3S** |
| **Frame Size T** | | | | | | | | | | | | |
| 199 | 33 | 59 | 63 | 50 | 50 | 60 | 50 | 125 | 125 | 150 | 150 | **S811+T18N3S** |
| 257 | 45 | 80 | 90 | 75 | 60 | 75 | 75 | 150 | 150 | 250 | 200 | **S811+T24N3S** |
| 324 | 55 | 100 | 110 | 100 | 75 | 100 | 100 | 250 | 200 | 300 | 250 | **S811+T30N3S** |
| **Frame Size U** | | | | | | | | | | | | |
| 415 | 75 | 110 | 147 | 125 | 100 | 125 | 125 | 300 | 250 | 300 | 300 | **S811+U36N3S** |
| 526 | 90 | 160 | 185 | 150 | 120 | 150 | 150 | 400 | 300 | 450 | 400 | **S811+U42N3S** |
| 623 | 110 | 185 | 220 | 200 | 150 | 250 | 200 | 450 | 400 | 550 | 450 | **S811+U50N3S** ① |
| **Frame Size V** | | | | | | | | | | | | |
| 415 | 75 | 110 | 147 | 125 | 100 | 125 | 125 | 300 | 250 | 300 | 300 | **S811+V36N3S** |
| 526 | 90 | 160 | 185 | 150 | 120 | 150 | 150 | 400 | 300 | 450 | 400 | **S811+V42N3S** |
| 623 | 110 | 185 | 220 | 200 | 150 | 250 | 200 | 450 | 400 | 550 | 450 | **S811+V50N3S** |
| 727 | 129 | 220 | 257 | 250 | 200 | 250 | 250 | 550 | 450 | 700 | 550 | **S811+V65N3S** |
| 816 | 147 | 257 | 295 | 250 | 250 | 300 | 250 | 600 | 550 | 750 | 700 | **S811+V72N3S** |
| 908 | 160 | 280 | 335 | 250 | 250 | 300 | 250 | 700 | 550 | 750 | 700 | **S811+V85N3S** |
| — | — | — | — | — | — | — | — | — | — | — | — | **S811+V10N3S** |

***Note***

① S811+U50_ unit does not have IEC certification.

## Accessories

### *Lug Kits*

S811+T_, S811U_ and S811+V_ soft starters each have different lug options based on your wiring needs. Each lug kit contains three lugs that can be mounted on either the load or line side.

**Lug Kit**

### Lug Kits

| S811+ Catalog Number | Description | Kits Required | Catalog Number |
|---|---|---|---|
| S811+T_, S811+U_ | 2 cable connections, 4 AWG to 1/0 cable | 2 | **EML22** |
| | 1 cable connection, 4/0 to 500 kcmil cable | | **EML23** |
| | 2 cable connections, 4/0 to 500 kcmil cable | | **EML24** |
| | 1 cable connection, 2/0 to 300 kcmil cable | | **EML25** |
| | 2 cable connections, 2/0 to 300 kcmil cable | | **EML26** |
| S811+V_ | 2 cable connections, 4/0 to 500 kcmil cable | 2 | **EML28** |
| | 4 cable connections, 4/0 to 500 kcmil cable | | **EML30** |
| | 6 cable connections, 4/0 to 500 kcmil cable | | **EML32** |
| | 4 cable connections, 2/0 to 300 kcmil cable | | **EML33** ① |

### *Power Supplies*

24 Vdc power supply that can be used with the S811+ SSRV or as a stand-alone device.

### Power Supplies

| Description | Catalog Number |
|---|---|
| 85–264 Vac input<br>24 Vdc output | **PSG240E** |
| 360–575 Vac input<br>24 Vdc output | **PSG240F** |

### *Lug Cover Kits*

Replacement covers for the S811+T_, S811+U_ and S811+V_ soft starters are available in case of damage to the existing covers.

### Lug Cover Kits

| Description | Catalog Number |
|---|---|
| Lug cover S811+T_, S811+U_ | **EML27** |
| Lug cover S811+V_ | **EML34** |

### *IP20 Kits*

### IP20 Kits

| Description | Catalog Number |
|---|---|
| S811+N_ | **SS-IP20-N** |
| S811+R_ | **SS-IP20-R** |
| S811+T_ and S811+U_ | **SS-IP20-TU** |
| S811+V_ | **SS-IP20-V** |

### *Surge Suppressors*

The surge suppressor can mount on either the line or load side of the soft starter. It is designed to clip the line voltage (or load side induced voltage).

**Surge Suppressor**

### Surge Suppressors

| Description | Catalog Number |
|---|---|
| 600V MOV for S811+_ units | **EMS39** |
| 690V MOV for S811+_ units ② | **EMS41** |

***Notes***

① The EML33 does not have a CSA listing.
② S811+T_ only.

### *Mounting Plates*

The mounting plates are designed to help make it easy to install or retrofit the soft starter into enclosures and MCCs. The soft starter can be mounted onto the plate prior to installation. The mounting plate is designed with tear drop mounting holes for easier installation.

#### Mounting Plates

| Description | Catalog Number |
|---|---|
| S811+N_ | **EMM13N** |
| S811+R_ | **EMM13R** |
| S811+T_ and S811+U_ | **EMM13T** |
| S811+V_ | **EMM13V** |

### *Vibration Plates*

The vibration plates allow the soft starter to be applied in high shock and vibration applications. The vibration plate allows vibration up to 5g and shock in up to 40g. The soft starter is mounted onto the vibration plate prior to installation in the panel.

#### Vibration Plates

| Description | Catalog Number |
|---|---|
| S811+N_ | **EMM14N** |
| S811+R_ | **EMM14R** |
| S811+T_ and S811+U_ | **EMM14T** |
| S811+V_ | **EMM14V** |

### *Adapter Plates*

The adapter plate allows customers to retrofit a S811+V_ soft starter with the S811+U_ soft starter.

#### Adapter Plates

| Description | Catalog Number |
|---|---|
| Adapter plates | **EMM13U** |

### *Control Wire Connector*

#### Control Wire Connector

| Description | Catalog Number |
|---|---|
| 12-pin, 5 mm pitch connector for control wiring | **EMA75** |

### *Digital Interface Module*

The Digital Interface Module (DIM) is available as a replacement part.

#### DIM

| Description | Catalog Number |
|---|---|
| Blank cover (filler) | **EMA68** |
| DIM for standard unit | **EMA91** |
| Panel mounting kit | |
| 3 ft cable | **EMA69A** |
| 5 ft cable | **EMA69B** |
| 8 ft cable | **EMA69C** |
| 10 ft cable | **EMA69D** |

## Options

### *S811+ Premium*

In addition to what is already there in the S811+ standard, these devices offer pump control and extended ramp functions.

#### S811+ Premium

| Current Range | Catalog Number |
|---|---|
| 11–37 | **S811+N37P3S** |
| 20–66 | **S811+N66P3S** |
| 32–105 | **S811+R10P3S** |
| 42–135 | **S811+R13P3S** |
| 56–180 | **S811+T18P3S** |
| 75–240 | **S811+T24P3S** |
| 95–304 | **S811+T30P3S** |
| 112–360 | **S811+U36P3S** |
| 131–420 | **S811+U42P3S** |
| 156–500 | **S811+U50P3S** ① |
| 112–360 | **S811+V36P3S** |
| 131–420 | **S811+V42P3S** |
| 156–500 | **S811+V50P3S** |
| 203–650 | **S811+V65P3S** |
| 225–720 | **S811+V72P3S** |
| 265–850 | **S811+V85P3S** |
| 312–1000 | **S811+V10P3S** |

### *S811+ Premium 690V Option*

In addition to what is already there in S811+ standard, this product offers 690V, pump control and extended ramp functions.

#### S811+ Premium 690V Option

| Current Range | Catalog Number |
|---|---|
| 56–180 | **S811+T18V3S** |
| 75–240 | **S811+T24V3S** |
| 95–304 | **S811+T30V3S** |
| 112–360 | **S811+V36V3S** |
| 131–420 | **S811+V42V3S** |
| 156–500 | **S811+V50V3S** |
| 203–650 | **S811+V65V3S** |
| 225–720 | **S811+V72V3S** |
| 265–850 | **S811+V85V3S** |

### *Cooling Fan Kit*

The EMM18 cooling fan kit mounts on either side of any frame size S811+ soft starter to provide additional printed circuit board cooling in high ambient operating temperatures.

#### Cooling Fan Kit

| Description | Catalog Number |
|---|---|
| Fan kit | **EMM18** |

***Note***

① S811+U50_ unit does not have IEC certification.

## Technical Data and Specifications

### Soft Starters—S811+

| Description | S811+N37_ | S811+N66_ | S811+R10+ | S811+R13_ |
|---|---|---|---|---|
| Max. current capacity | 37 | 66 | 105 | 135 |
| FLA range | 11–37 | 20–66 | 32–105 | 42–135 |
| **General Information** | | | | |
| Bypass mechanical lifespan | 10M | 10M | 10M | 10M |
| Insulating voltage Ui | 660V | 660V | 660V | 660V |
| Ramp time range | 0.5–180 seconds (0.5–360 seconds S811+ Premium) | 0.5–180 seconds (0.5–360 seconds S811+ Premium) | 0.5–180 seconds (0.5–360 seconds S811+ Premium) | 0.5–180 seconds (0.5–360 seconds S811+ Premium) |
| Resistance to vibration | 3g | 3g | 3g | 3g |
| Resistance to shock | 15g | 15g | 15g | 15g |
| **Electrical Information** | | | | |
| Operating voltage | 200–600V | 200–600V | 200–600V | 200–600V |
| Operating frequency | 47–63 Hz | 47–63 Hz | 47–63 Hz | 47–63 Hz |
| Overload setting | 30–100% | 30–100% | 30–100% | 30–100% |
| Trip class | 5, 10, 20 and 30 | 5, 10, 20 and 30 | 5, 10, 20 and 30 | 5, 10, 20 and 30 |
| **Cabling Capacity (IEC 947)** | | | | |
| Number of conductors | 1 | 1 | 1 | 1 |
| Wire sizes | 14–2 | 14–2 | 14–4/0 | 14–4/0 |
| Type of connectors | Box lug | Box lug | Box lug | Box lug |
| **Control Wiring (12-Pin)** | | | | |
| Wire sizes in AWG | 22–14 | 22–14 | 22–14 | 22–14 |
| Number of conductors (stranded) | 2 (or one AWG 12) | 2 (or one AWG 12) | 2 (or one AWG 12) | 2 (or one AWG 12) |
| Torque requirements in lb-in | 3.5 | 3.5 | 3.5 | 3.5 |
| Solid, stranded or flexible max. size in $mm^2$ | 3.31 | 3.31 | 3.31 | 3.31 |
| **Control Power Requirements** | | | | |
| Voltage range (24V ±10%) | 21.6–26.4 | 21.6–26.4 | 21.6–26.4 | 21.6–26.4 |
| Steady-state current amps | 1.0 | 1.0 | 1.0 | 1.0 |
| Inrush current amps | 10 | 10 | 10 | 10 |
| Ripple | 1% | 1% | 1% | 1% |
| **Relays (1) Class A and C** | | | | |
| Voltage AC—maximum | 240 | 240 | 240 | 240 |
| Voltage DC—maximum | 120 | 120 | 120 | 120 |
| Amps—maximum | 3 | 3 | 3 | 3 |
| **Environment** | | | | |
| Temperature—operating | –30° to 50°C (no derating) consult factory for operation >50°C | –30° to 50°C (no derating) consult factory for operation >50°C | –30° to 50°C (no derating) consult factory for operation >50°C | –30° to 50°C (no derating) consult factory for operation >50°C |
| Temperature—storage | –50° to 70°C | –50° to 70°C | –50° to 70°C | –50° to 70°C |
| Altitude | <2000m—consult factory for operation >2000m | <2000m—consult factory for operation >2000m | <2000m—consult factory for operation >2000m | <2000m—consult factory for operation >2000m |
| Humidity | <95% noncondensing | <95% noncondensing | <95% noncondensing | <95% noncondensing |
| Operating position | Any | Any | Any | Any |
| Pollution degree IEC947-1 | 3 | 3 | 3 | 3 |
| Impulse withstand voltage IEC947-4-1 | 6000V | 6000V | 6000V | 6000V |

1

## Soft Starters—S811+, continued

| Description | S811+T18_ | S811+T24_ | S811+T30_ | S811+U36_ |
|---|---|---|---|---|
| Max. current capacity | 180 | 240 | 304 | 360 |
| FLA range | 56–180 | 75–240 | 95–304 | 112–360 |
| **General Information** | | | | |
| Bypass mechanical lifespan | 10M | 10M | 10M | 10M |
| Insulating voltage Ui | 660V | 660V | 660V | 660V |
| Ramp time range | 0.5–180 seconds (0.5–360 seconds S811+ Premium) | 0.5–180 seconds (0.5–360 seconds S811+ Premium) | 0.5–180 seconds (0.5–360 seconds S811+ Premium) | 0.5–180 seconds (0.5–360 seconds S811+ Premium) |
| Resistance to vibration | 3g | 3g | 3g | 3g |
| Resistance to shock | 15g | 15g | 15g | 15g |
| **Electrical Information** | | | | |
| Operating voltage | 200–600V | 200–600V | 200–600V | 200–600V |
| Operating frequency | 47–63 Hz | 47–63 Hz | 47–63 Hz | 47–63 Hz |
| Overload setting | 30–100% | 30–100% | 30–100% | 30–100% |
| Trip class | 5, 10, 20 and 30 | 5, 10, 20 and 30 | 5, 10, 20 and 30 | 5, 10, 20 and 30 |
| **Cabling Capacity (IEC 947)** | | | | |
| Number of conductors | 1 or 2 | 1 or 2 | 1 or 2 | 1 or 2 |
| Wire sizes | 4 AWG to 500 kcmil | 4 AWG to 500 kcmil | 4 AWG to 500 kcmil | 4 AWG to 500 kcmil |
| Type of connectors | Add-on lug kit | Add-on lug kit | Add-on lug kit | Add-on lug kit |
| **Control Wiring (12-Pin)** | | | | |
| Wire sizes in AWG | 22–14 | 22–14 | 22–14 | 22–14 |
| Number of conductors (stranded) | 2 (or one AWG 12) | 2 (or one AWG 12) | 2 (or one AWG 12) | 2 (or one AWG 12) |
| Torque requirements in lb-in | 3.5 | 3.5 | 3.5 | 3.5 |
| Solid, stranded or flexible max. size in $mm^2$ | 3.31 | 3.31 | 3.31 | 3.31 |
| **Control Power Requirements** | | | | |
| Voltage range (24V ±10%) | 21.6–26.4 | 21.6–26.4 | 21.6–26.4 | 21.6–26.4 |
| Steady-state current amps | 1.0 | 1.0 | 1.0 | 1.0 |
| Inrush current amps | 10 | 10 | 10 | 10 |
| Ripple | 1% | 1% | 1% | 1% |
| **Relays (1) Class A and C** | | | | |
| Voltage AC—maximum | 240 | 240 | 240 | 240 |
| Voltage DC—maximum | 120 | 120 | 120 | 120 |
| Amps—maximum | 3 | 3 | 3 | 3 |
| **Environment** | | | | |
| Temperature—operating | –30° to 50°C (no derating) consult factory for operation >50°C | –30° to 50°C (no derating) consult factory for operation >50°C | –30° to 50°C (no derating) consult factory for operation >50°C | –30° to 50°C (no derating) consult factory for operation >50°C |
| Temperature—storage | –50° to 70°C | –50° to 70°C | –50° to 70°C | –50° to 70°C |
| Altitude | <2000m—consult factory for operation >2000m | <2000m—consult factory for operation >2000m | <2000m—consult factory for operation >2000m | <2000m—consult factory for operation >2000m |
| Humidity | <95% noncondensing | <95% noncondensing | <95% noncondensing | <95% noncondensing |
| Operating position | Any | Any | Any | Any |
| Pollution degree IEC947-1 | 3 | 3 | 3 | 3 |
| Impulse withstand voltage IEC947-4-1 | 6000V | 6000V | 6000V | 6000V |

## Soft Starters—S811+, continued

| Description | S811+U42_ | S811+U50_ ① | S811+V36_ | S811+V42_ |
|---|---|---|---|---|
| Max. current capacity | 420 | 500 | 360 | 420 |
| FLA range | 131–420 | 156–500 | 112–360 | 131–420 |
| **General Information** | | | | |
| Bypass mechanical lifespan | 10M | 10M | 10M | 10M |
| Insulating voltage Ui | 660V | 660V | 660V | 660V |
| Ramp time range | 0.5–180 seconds (0.5–360 seconds S811+ Premium) | 0.5–180 seconds (0.5–360 seconds S811+ Premium) | 0.5–180 seconds (0.5–360 seconds S811+ Premium) | 0.5–180 seconds (0.5–360 seconds S811+ Premium) |
| Resistance to vibration | 3g | 3g | 3g | 3g |
| Resistance to shock | 15g | 15g | 15g | 15g |
| **Electrical Information** | | | | |
| Operating voltage | 200–600V | 200–600V | 200–600V | 200–600V |
| Operating frequency | 47–63 Hz | 47–63 Hz | 47–63 Hz | 47–63 Hz |
| Overload setting | 30–100% | 30–100% | 30–100% | 30–100% |
| Trip class | 5, 10, 20 and 30 | 5, 10, 20 and 30 | 5, 10, 20 and 30 | 5, 10, 20 and 30 |
| **Cabling Capacity (IEC 947)** | | | | |
| Number of conductors | 1 or 2 | 1 or 2 | 2, 4 or 6 | 2, 4 or 6 |
| Wire sizes | 4 AWG to 500 kcmil | 4 AWG to 500 kcmil | 4 AWG to 500 kcmil | 4 AWG to 500 kcmil |
| Type of connectors | Add-on lug kit | Add-on lug kit | Add-on lug kit | Add-on lug kit |
| **Control Wiring (12-Pin)** | | | | |
| Wire sizes in AWG | 22–14 | 22–14 | 22–14 | 22–14 |
| Number of conductors (stranded) | 2 (or one AWG 12) | 2 (or one AWG 12) | 2 (or one AWG 12) | 2 (or one AWG 12) |
| Torque requirements in lb-in | 3.5 | 3.5 | 3.5 | 3.5 |
| Solid, stranded or flexible max. size in $mm^2$ | 3.31 | 3.31 | 3.31 | 3.31 |
| **Control Power Requirements** | | | | |
| Voltage range (24V ±10%) | 21.6–26.4 | 21.6–26.4 | 21.6–26.4 | 21.6–26.4 |
| Steady-state current amps | 1.0 | 1.0 | 1.4 | 1.4 |
| Inrush current amps | 10 | 10 | 10 | 10 |
| Ripple | 1% | 1% | 1% | 1% |
| **Relays (1) Class A and C** | | | | |
| Voltage AC—maximum | 240 | 240 | 240 | 240 |
| Voltage DC—maximum | 120 | 120 | 120 | 120 |
| Amps—maximum | 3 | 3 | 3 | 3 |
| **Environment** | | | | |
| Temperature—operating | –30° to 50°C (no derating) consult factory for operation >50°C | –30° to 50°C (no derating) consult factory for operation >50°C | –30° to 50°C (no derating) consult factory for operation >50°C | –30° to 50°C (no derating) consult factory for operation >50°C |
| Temperature—storage | –50° to 70°C | –50° to 70°C | –50° to 70°C | –50° to 70°C |
| Altitude | <2000m—consult factory for operation >2000m | <2000m—consult factory for operation >2000m | <2000m—consult factory for operation >2000m | <2000m—consult factory for operation >2000m |
| Humidity | <95% noncondensing | <95% noncondensing | <95% noncondensing | <95% noncondensing |
| Operating position | Any | Any | Any | Any |
| Pollution degree IEC947-1 | 3 | 3 | 3 | 3 |
| Impulse withstand voltage IEC947-4-1 | 6000V | 6000V | 6000V | 6000V |

***Note***

① S811+U50_ unit does not have IEC certification.

1

## Soft Starters—S811+, continued

| Description | S811+V50_ | S811+V65_ | S811+V72_ | S811+V85_ | S811+V10_ ① |
|---|---|---|---|---|---|
| Max. current capacity | 500 | 650 | 720 | 850 | 1000 |
| FLA range | 156–500 | 203–650 | 225–720 | 265–580 | 320–1000 |
| **General Information** | | | | | |
| Bypass mechanical lifespan | 10M | 10M | 10M | 10M | 10M |
| Insulating voltage Ui | 660V | 660V | 660V | 660V | 660V |
| Ramp time range | 0.5–180 seconds (0.5–360 seconds S811+ Premium) | 0.5–180 seconds (0.5–360 seconds S811+ Premium) | 0.5–180 seconds (0.5–360 seconds S811+ Premium) | 0.5–180 seconds (0.5–360 seconds S811+ Premium) | 0.5–180 seconds (0.5–360 seconds S811+ Premium) |
| Resistance to vibration | 3g | 3g | 3g | 3g | 3g |
| Resistance to shock | 15g | 15g | 15g | 15g | 15g |
| **Electrical Information** | | | | | |
| Operating voltage | 200–600V | 200–600V | 200–600V | 200–600V | 200–600V |
| Operating frequency | 47–63 Hz | 47–63 Hz | 47–63 Hz | 47–63 Hz | 47–63 Hz |
| Overload setting | 30–100% | 30–100% | 30–100% | 30–100% | 30–100% |
| Trip class | 5, 10, 20 and 30 | 5, 10, 20 and 30 | 5, 10, 20 and 30 | 5, 10, 20 and 30 | 5, 10, 20 and 30 |
| **Cabling Capacity (IEC 947)** | | | | | |
| Number of conductors | 2, 4 or 6 | 2, 4 or 6 | 2, 4 or 6 | 2, 4 or 6 | 2, 4 or 6 |
| Wire sizes | 2/0 to 500 kcmil | 2/0 to 500 kcmil | 2/0 to 500 kcmil | 2/0 to 500 kcmil | 2/0 to 500 kcmil |
| Type of connectors | Add-on lug kit | Add-on lug kit | Add-on lug kit | Add-on lug kit | Add-on lug kit |
| **Control Wiring (12-Pin)** | | | | | |
| Wire sizes in AWG | 22–14 | 22–14 | 22–14 | 22–14 | 22–14 |
| Number of conductors (stranded) | 2 (or one AWG 12) | 2 (or one AWG 12) | 2 (or one AWG 12) | 2 (or one AWG 12) | 2 (or one AWG 12) |
| Torque requirements in lb-in | 3.5 | 3.5 | 3.5 | 3.5 | 3.5 |
| Solid, stranded or flexible max. size in $mm^2$ | 3.31 | 3.31 | 3.31 | 3.31 | 3.31 |
| **Control Power Requirements** | | | | | |
| Voltage range (24V ±10%) | 21.6–26.4 | 21.6–26.4 | 21.6–26.4 | 21.6–26.4 | 21.6–26.4 |
| Steady-state current amps | 1.4 | 1.4 | 1.4 | 1.4 | 1.4 |
| Inrush current amps | 10 | 10 | 10 | 10 | 10 |
| Ripple | 1% | 1% | 1% | 1% | 1% |
| **Relays (1) Class A and C** | | | | | |
| Voltage AC—maximum | 240 | 240 | 240 | 240 | 240 |
| Voltage DC—maximum | 120 | 120 | 120 | 120 | 120 |
| Amps—maximum | 3 | 3 | 3 | 3 | 3 |
| **Environment** | | | | | |
| Temperature—operating | –30° to 50°C (no derating) consult factory for operation >50°C | –30° to 50°C (no derating) consult factory for operation >50°C | –30° to 50°C (no derating) consult factory for operation >50°C | –30° to 50°C (no derating) consult factory for operation >50°C | –30° to 50°C (no derating) consult factory for operation >50°C |
| Temperature—storage | –50° to 70°C | –50° to 70°C | –50° to 70°C | –50° to 70°C | –50° to 70°C |
| Altitude | <2000m—consult factory for operation >2000m | <2000m—consult factory for operation >2000m | <2000m—consult factory for operation >2000m | <2000m—consult factory for operation >2000m | <2000m—consult factory for operation >2000m |
| Humidity | <95% noncondensing | <95% noncondensing | <95% noncondensing | <95% noncondensing | <95% noncondensing |
| Operating position | Any | Any | Any | Any | Any |
| Pollution degree IEC947-1 | 3 | 3 | 3 | 3 | 3 |
| Impulse withstand voltage IEC947-4-1 | 6000V | 6000V | 6000V | 6000V | 6000V |

***Note***

① UR recognized product.

## Wiring Diagrams

### Line Connected Soft Starter

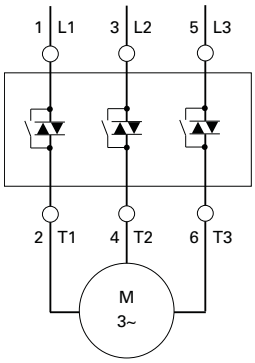


### Inside-the-Delta Connected Soft Starter for a 6-Lead Motor

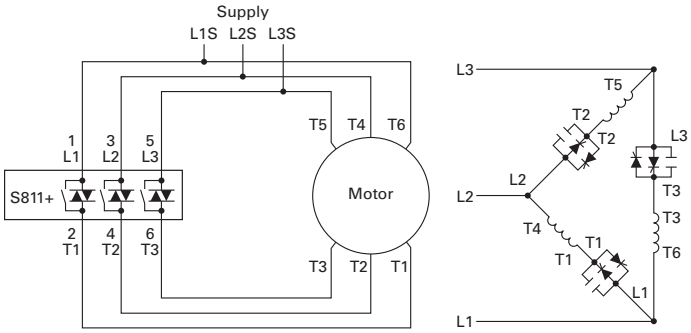


### Inside-the-Delta Connected Soft Starter for a 12-Lead Low Voltage Motor

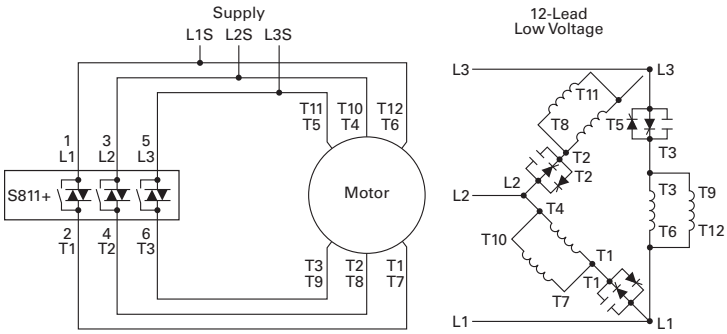


### Inside-the-Delta Connected Soft Starter for a 12-Lead High Voltage Motor

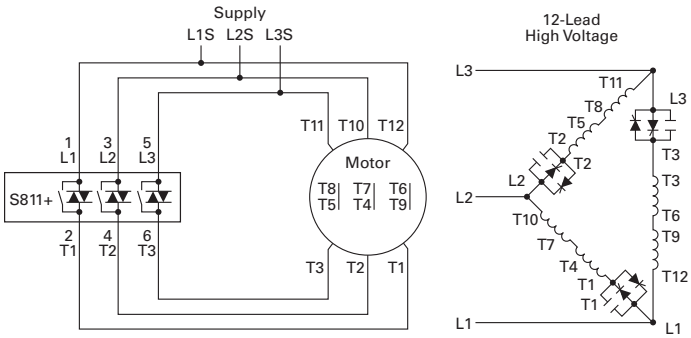

1

## Dimensions

Approximate Dimensions in Inches (mm)

### Soft Starters—S811+

| Catalog Number | W | H | D | Weight in Lbs (kg) |
|---|---|---|---|---|
| **S811+N37N3S** | 2.66 (67.6) | 7.37 (187.2) | 6.45 (163.9) | 5.8 (2.6) |
| **S811+N66N3S** | 2.66 (67.6) | 7.37 (187.2) | 6.45 (163.9) | 5.8 (2.6) |
| **S811+R10N3S** | 4.38 (111.3) | 7.92 (201.1) | 6.64 (168.6) | 10.5 (4.8) |
| **S811+R13N3S** | 4.38 (111.3) | 7.92 (201.1) | 6.64 (168.6) | 10.5 (4.8) |
| **S811+T18N3S** | 7.65 (194.4) | 12.71 (322.9) | 6.47 (164.4) | 48 (21.8) with lugs 41 (18.6) without lugs |
| **S811+T24N3S** | 7.65 (194.4) | 12.71 (322.9) | 6.47 (164.4) | 48 (21.8) with lugs 41 (18.6) without lugs |
| **S811+T30N3S** | 7.65 (194.4) | 12.71 (322.9) | 6.47 (164.4) | 48 (21.8) with lugs 41 (18.6) without lugs |
| **S811+U36N3S** | 7.73 (196.3) | 12.72 (323.1) | 7.16 (181.8) | 48 (21.8) with lugs 41 (18.6) without lugs |
| **S811+U42N3S** | 7.73 (196.3) | 12.72 (323.1) | 7.16 (181.8) | 48 (21.8) with lugs 41 (18.6) without lugs |
| **S811+U50N3S** | 7.73 (196.3) | 12.72 (323.1) | 7.16 (181.8) | 48 (21.8) with lugs 41 (18.6) without lugs |
| **S811+V36N3S** | 11.05 (280.6) | 16.57 (420.8) | 7.39 (187.8) | 103 (46.8) with lugs 91 (41.4) without lugs |
| **S811+V42N3S** | 11.05 (280.6) | 16.57 (420.8) | 7.39 (187.8) | 103 (46.8) with lugs 91 (41.4) without lugs |
| **S811+V50N3S** | 11.05 (280.6) | 16.57 (420.8) | 7.39 (187.8) | 103 (46.8) with lugs 91 (41.4) without lugs |
| **S811+V65N3S** | 11.05 (280.6) | 16.57 (420.8) | 7.39 (187.8) | 103 (46.8) with lugs 91 (41.4) without lugs |
| **S811+V72N3S** | 11.05 (280.6) | 16.57 (420.8) | 7.39 (187.8) | 103 (46.8) with lugs 91 (41.4) without lugs |
| **S811+V85N3S** | 11.05 (280.6) | 16.57 (420.8) | 7.39 (187.8) | 103 (46.8) with lugs 91 (41.4) without lugs |
| **S811+V10N3S** | 11.05 (280.6) | 16.57 (420.8) | 7.39 (187.8) | 103 (46.8) with lugs 91 (41.4) without lugs |

Also refer to dimension drawings on **Pages V6-T1-97** through **V6-T1-99.**

Approximate Dimensions in Inches (mm)

## S811+N_

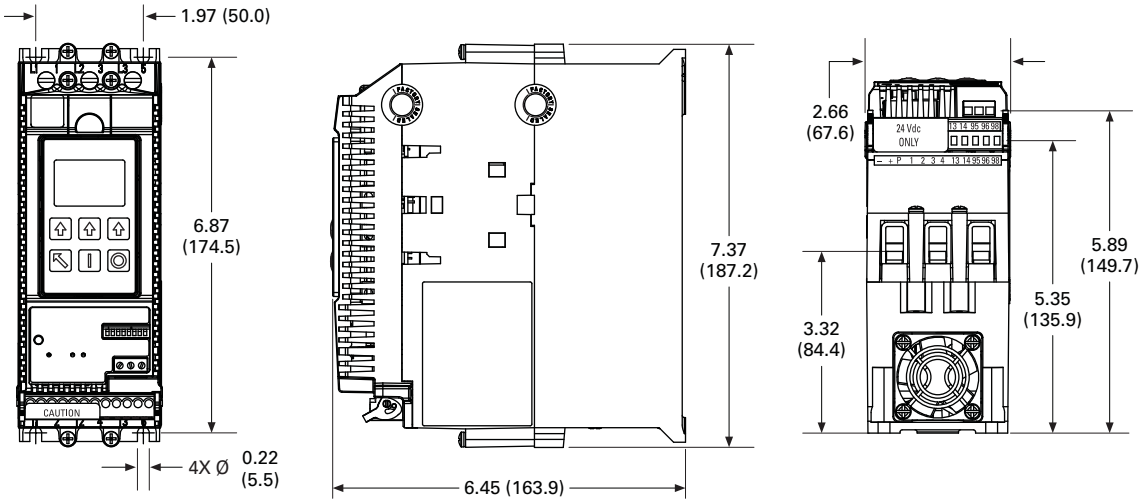


## S811+R_

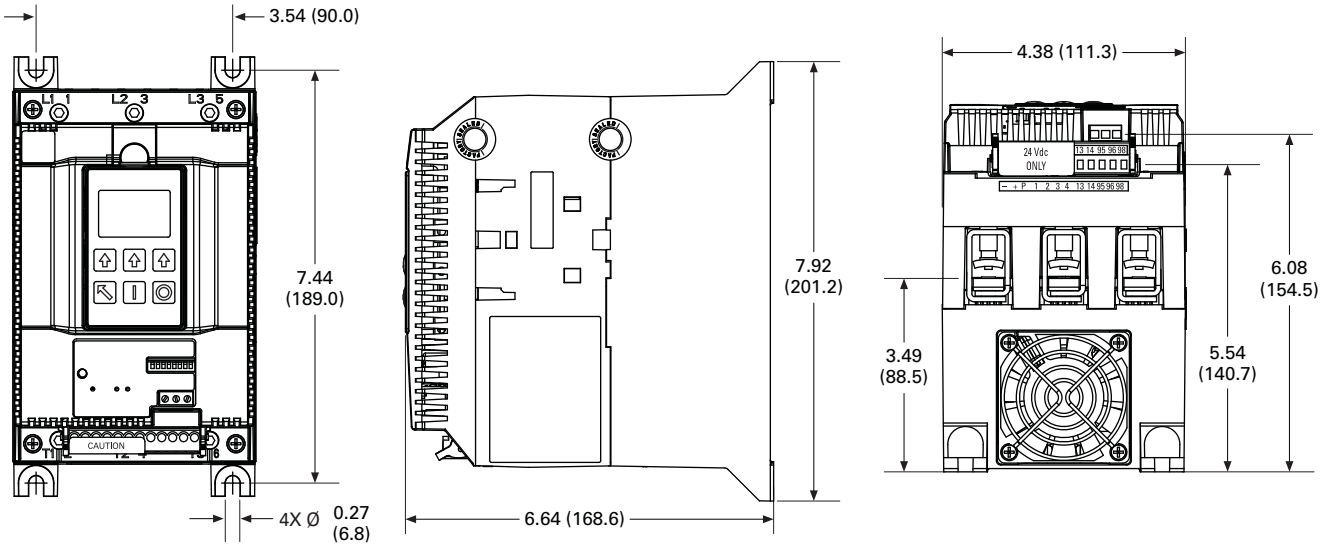

1

Approximate Dimensions in Inches (mm)

**S811+T_**

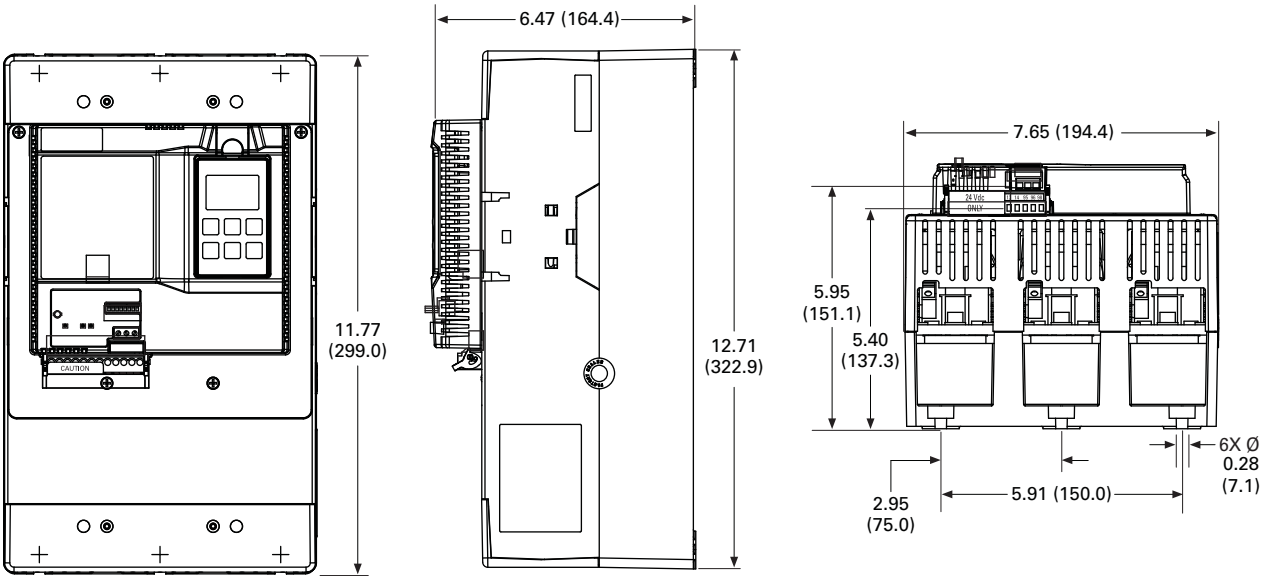


**S811+U_**

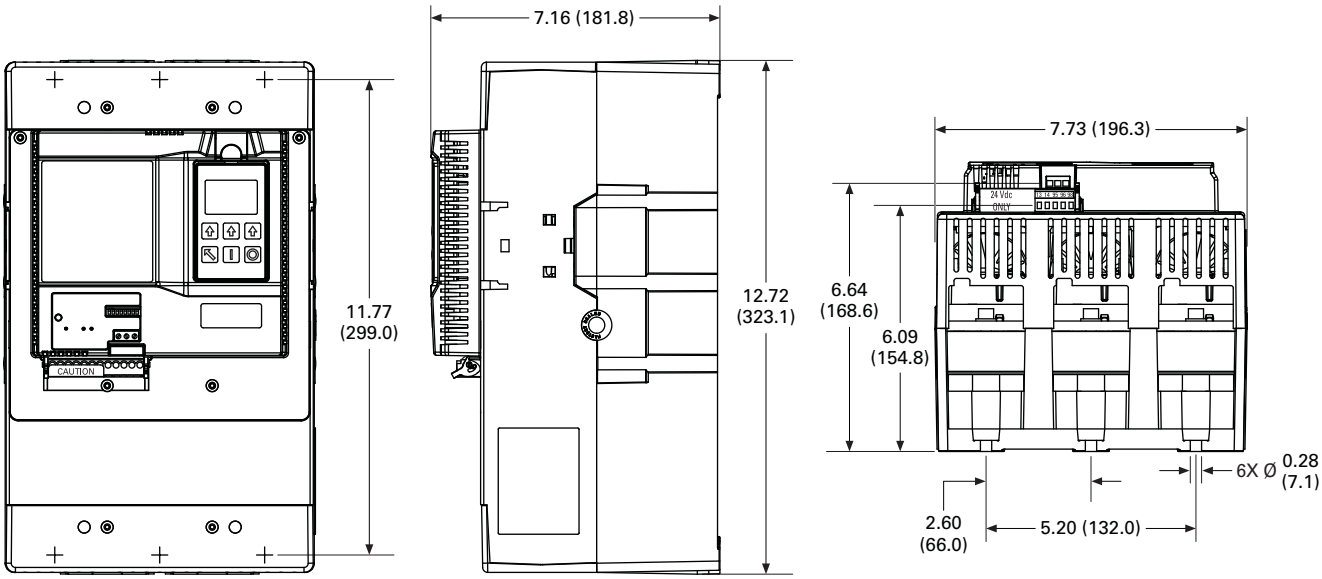

Approximate Dimensions in Inches (mm)
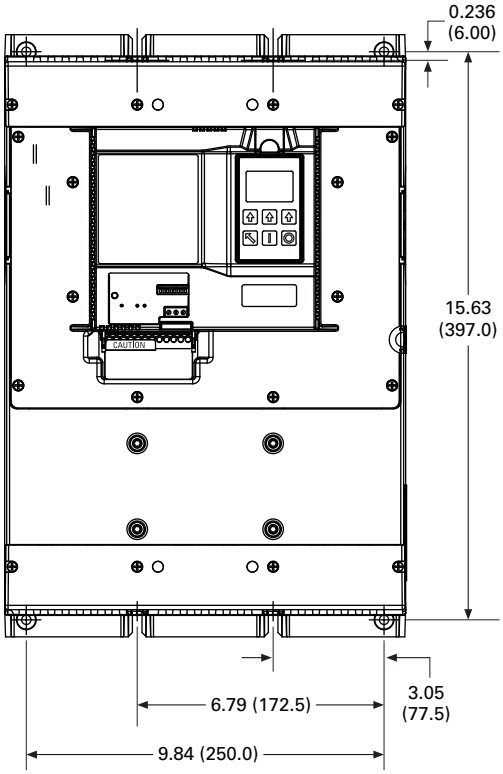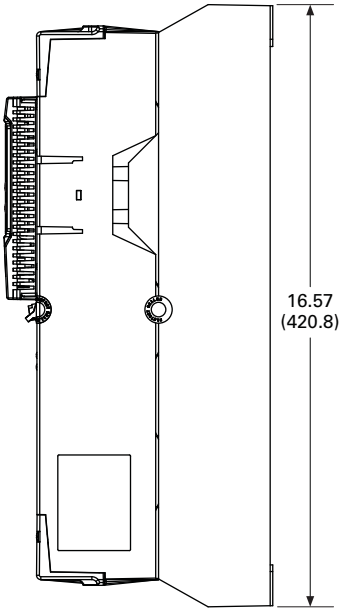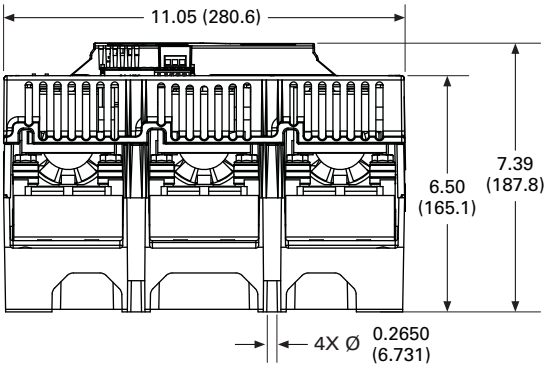
**S811+V__**