PART NAME	UTILIBOX (STYLE K)	PART No.	CU-1950	REV. DATE	

MATERIAL: HIGH-IMPACT ABS
(FLAMMABILITY RATING OF UL94-HB)
FINISH: BLACK TEXTURED

ALL DIMENSIONS HAVE ±0.015 TOLERANCE.

BOX FEATURES PRESS-FIT COVER AND
THREE MOLDED-IN PROTRUDING WIRE/CABLE ENTRY POINTS.

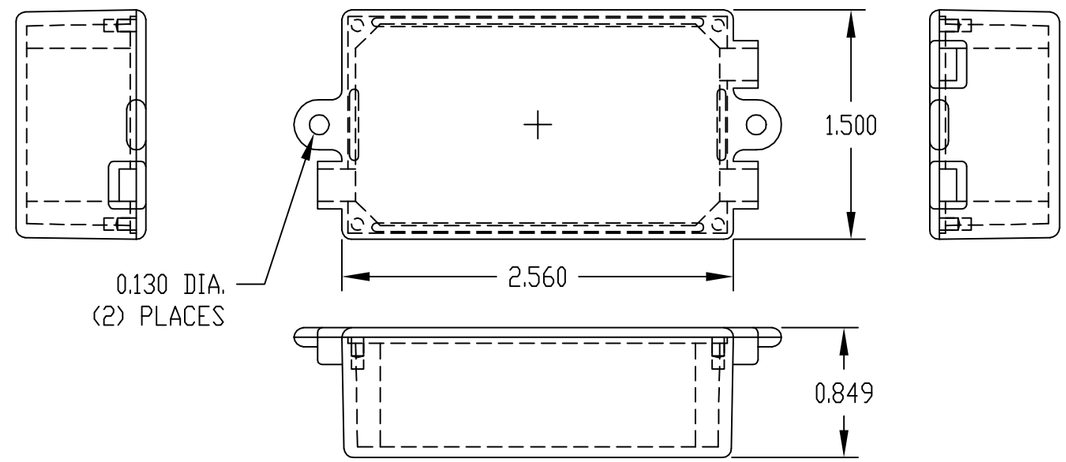

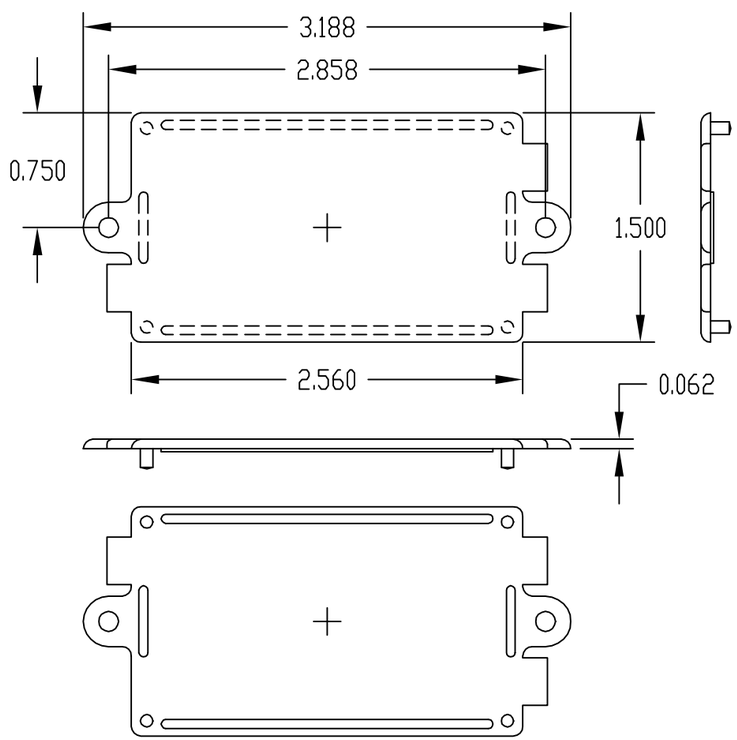

COVER

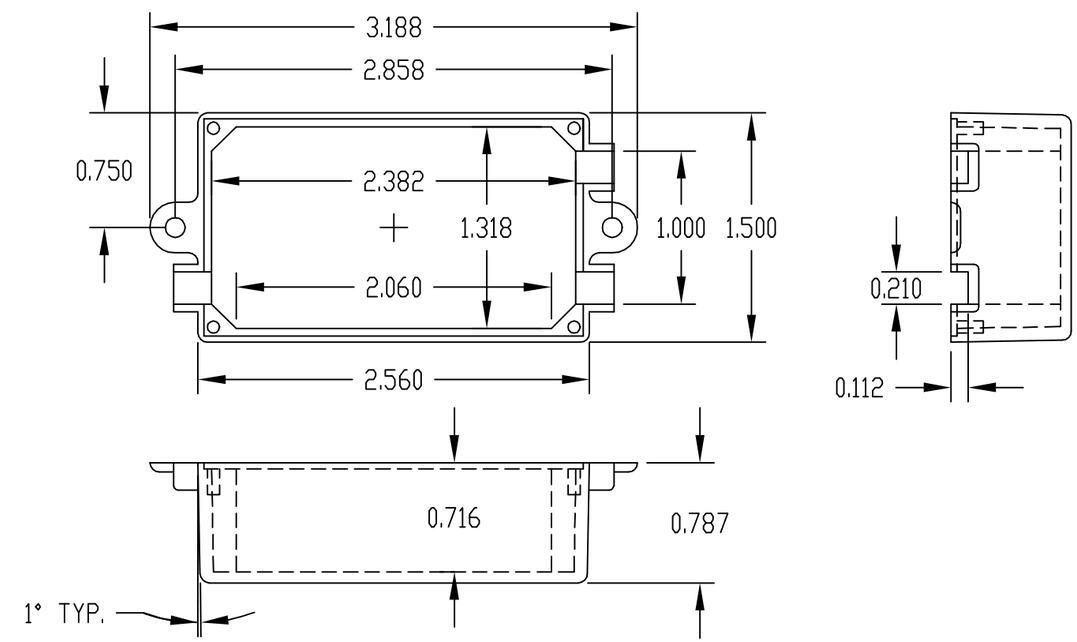

BODY