CHARACTERISTICS					
PARAMETER	MIN	TYP	MAX	UNITS	CONDITIONS\REMARKS
SUPPLY VOLTAGE	4.5	5.0	12.0	VOLTS	−25°C TO 85°C
SUPPLY CURRENT		8	11	mA	MAX @ −25°C, TYP @ 25°C, Vs = 5.0V, EXCLUDES LOAD
OUTPUT CURRENT	1			mA	SINKING OR SOURCING
OUTPUT VOLTAGE SWING	0.4 V TYP NEG GAUSS Vs = 0.4 TYP POSITIVE GAUSS				
SENSITIVITY	18.0		22.5	mV/NI	@ Vs = 5.0 VOLTS & 25°C △5
LINEARITY					DEV FROM STR LINE FROM −I MAX TO +I MAX △1
Vout @ Ø NI	.5(Vs)−2%		.5(Vs)+2%	VOLTS	25°C
TEMP ERROR − NULL	−.02		+.02	%/°C	−25°C TO 85°C
TEMP ERROR − GAIN	−.06		+.01	5/°C	−25°C TO 85°C

M CSLA3CD

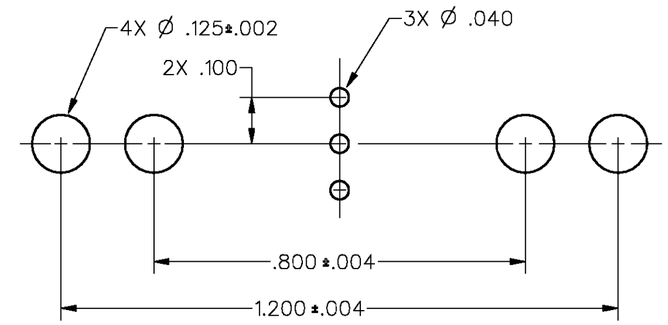

SUGGESTED HOLE CENTERS
SCALE 4:1

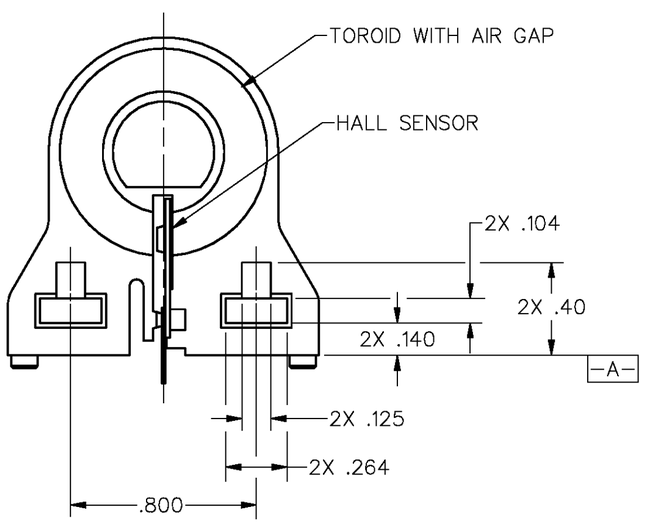

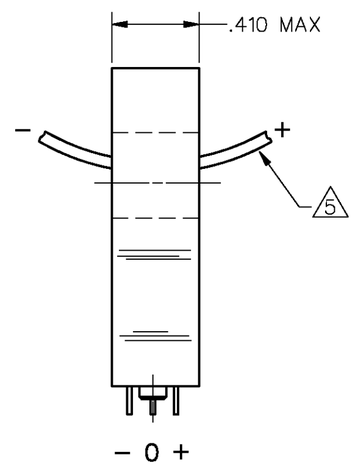

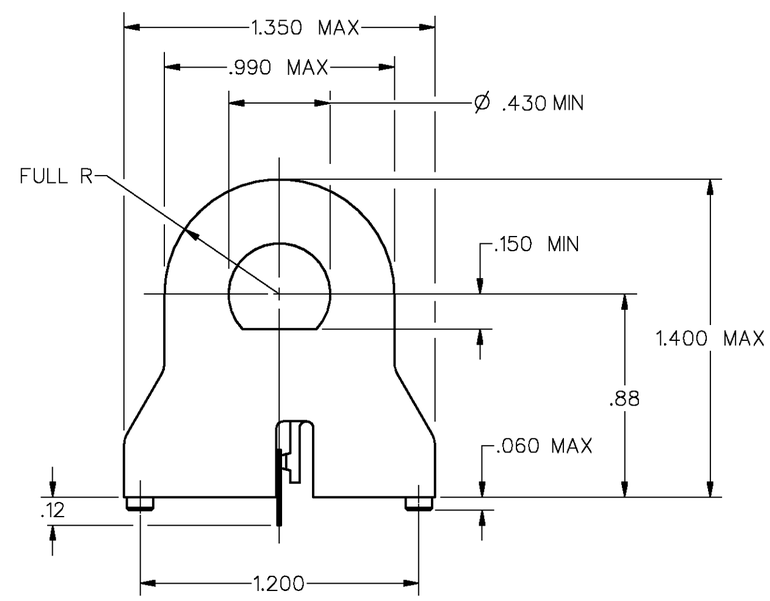

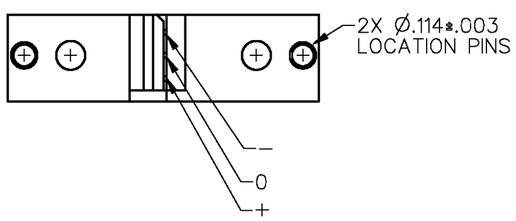

NOTES
△1 SUGGESTED I MAX FOR LINEAR OPERATION IS 72 AMPS
2 − RECOMMENDED MOUNTING IS 4−40 SQUARE NUT AND .375 LONG 4−40 SCREW
3 − CONVENTIONAL CURRENT FLOW IN DIRECTION INDICATED WILL CAUSE AN INCREASE IN OUTPUT VOLTAGE
4 − THE DEVICE CANNOT BE DAMAGED BY MAGNETIC OVERDRIVE
△5 AT Vs OTHER THAN 5.0 VOLTS, SENSITIVITY = (NUMBER SHOWN) X Vs/5

DRAWING NUMBER CSLA3CD
PAGE 1 OF 1
RELEASE NO. CO−83742 REPLACES CSLA3CDX
ISSUE 2
CHECK
REVISIONS
A CO−95704 DLM 16 MAR 00
CHECK
CHECK
FORMTEK
DRAWN D L T 13DEC96

ESD SENSITIVITY: CLASS 3

MASTER REDUCED
ANSI Y14.5M−1982 APPLIES

THIS DRAWING COVERS A PROPRIETARY ITEM AND IS THE PROPERTY OF MICRO SWITCH. A DIVISION OF HONEYWELL. THIS DRAWING IS NOT TO BE COPIED OR USED WITHOUT THE APPROVAL OF MICRO SWITCH.

MICRO SWITCH a Honeywell Division
FED. MFG. CODE 81929

CURRENT SENSOR

CATALOG LISTING
CSLA3CD

THIRD ANGLE PROJECTION
SCALE 2 : 1
DO NOT SCALE PRINT

UNLESS OTHERWISE SPECIFIED TOLERANCES ARE

ONE PLACE	(.0)	±.030
TWO PLACES	(.00)	±.015
THREE PLACES	(.000)	±.005
ANGLES		±

WEIGHT