Crystal Units
Surface Mount Type CX3225GB

KYOCERA

3.2×2.5mm for Consumer Products

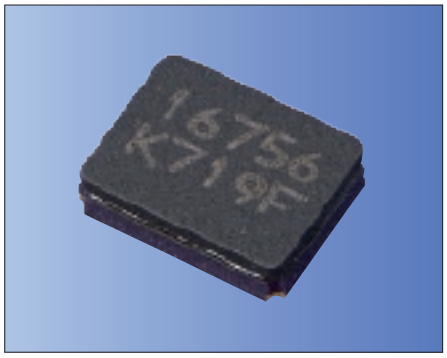

RoHS Compliant

Features

- Crystal unit for Consumer Products
- Small and low profile 0.9mm max. (3.2×2.5×0.8mm)
- Ceramic package
- Reflow compatible

Applications

- Digital Electronics
- Consumer Products

How to Order

CX3225GB 27000 □□ □ □ □ □□

① ② ③ ④ ⑤ ⑥ ⑦

① Series ② Frequency

③ Load Capacitance ④ Frequency Tolerance

D0	8 pF	H	$\pm 20\times10^{-6}$

⑤ Operating Temp. Range ⑥ Frequency Temp. Stability

EQ	−10 to +70°C	$\pm 30\times10^{-6}$

⑦ Individual Specification

Packaging (Tape & Reel 1000/ 3000 pcs./ reel)

Specifications

Item	Symbol	Specification	Units	Remarks
Frequency Range	f_{nom}	9800 to 54000	kHz	
Overtone Order	OT	Fundamental	—	
Load Capacitance	CL	8	pF	Please contact us for other Load Capacitance.
Frequency Tolerance	f_{tol}	±20	$\times10^{-6}$	25°C±3°C
Motional Series Resistance	R1	Table 1	ohm	
Drive Level	DL	Table 2	μW	
Operating Temp. Range	T_{use}	−10 to +70	°C	
Storage Temp. Range	T_{stg}	−40 to +85	°C	
Frequency Temp. Characteristics	f_{tem}	±30	$\times10^{-6}$	Freq. deviation from the value at 25°C

Please contact us for other specifications.

Table1 Motional Series Resistance

Frequency Range	Motional Series Resistance
9800≤f_{nom}<12000kHz	200Ω max.
12000≤f_{nom}<13000kHz	150Ω max.
13000≤f_{nom}<14000kHz	100Ω max.
14000≤f_{nom}<20000kHz	80Ω max.
20000≤f_{nom}<27000kHz	60Ω max.
27000≤f_{nom}≤54000kHz	50Ω max.

Table2 Level of Drive

Frequency Range	Level of Drive
9800≤f_{nom}≤54000kHz	10μW (100μW max.)

Dimensions

(Unit: mm)

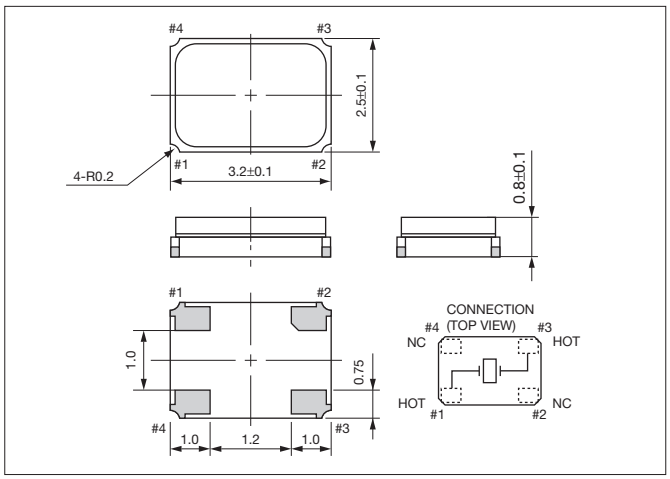

Recommended Land Pattern
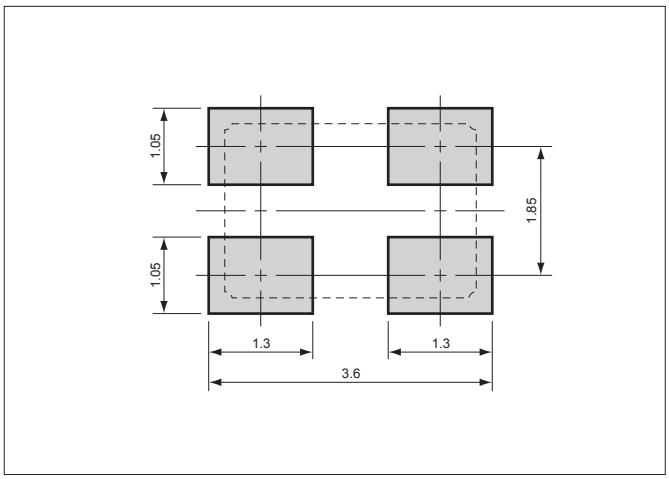
(Unit: mm)