**MICRO SWITCH**
FREEPORT, ILLINOIS, U.S.A.
A DIVISION OF HONEYWELL
FED. MFG. CODE 51529

# SWITCH–ENCLOSED

CATALOG LISTING
**BZE6-2RQ219**

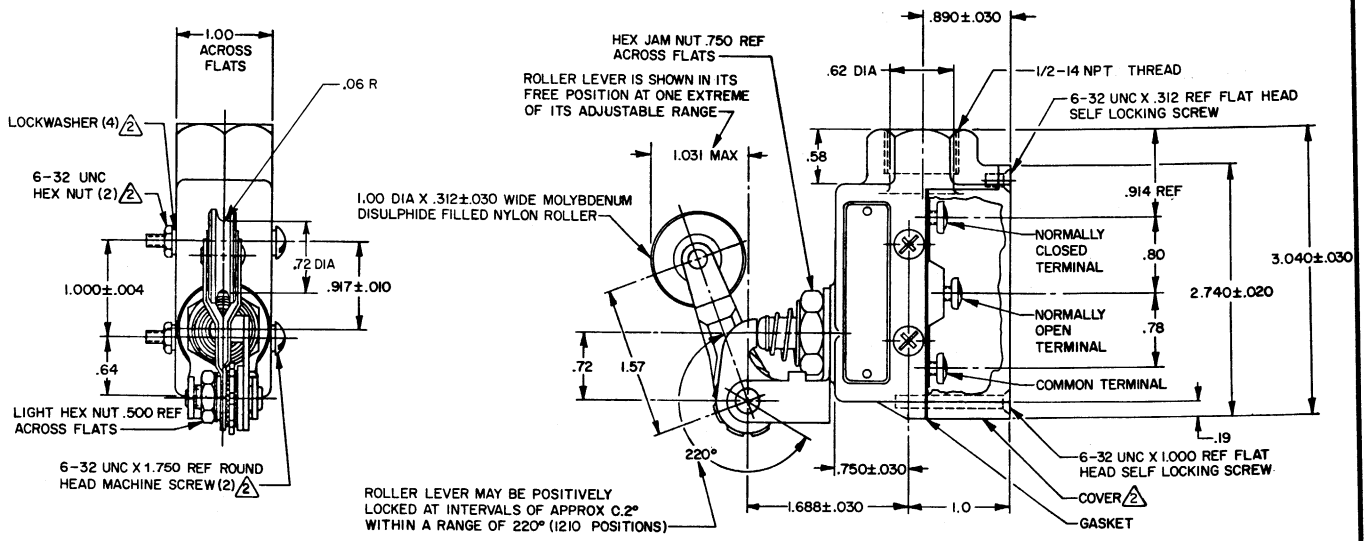


NOTES–

1 – 6-32 UNC X .219 REF BINDING HEAD TERMINAL SCREW AND CUPWASHER (3)
2 FURNISHED UNASSEMBLED
3 – ROLLER LEVER BRACKET ASSEMBLY MAY BE SET AT ANY ONE OF EIGHT POSITIONS SPACED 45° APART
4 – SEAL RATING: NEMA1
IP40

THIS DRAWING COVERS A PROPRIETARY ITEM AND IS THE PROPERTY OF MICRO SWITCH, A DIVISION OF HONEYWELL. THIS DRAWING IS NOT TO BE COPIED OR USED WITHOUT THE APPROVAL OF MICRO SWITCH.

| CHARACTERISTICS | ELECTRICAL DATA | SCALE FULL |
|---|---|---|
| OPERATING FORCE ———— 10-18 OZ | CONTACT ARRANGEMENT S P D T | DO NOT SCALE PRINT |
| RELEASE FORCE ———— 6 OZ MIN | 15A-125, 250 OR 480 VAC, 2A-600 VAC | UNLESS OTHERWISE NOTED DIMENSIONS ARE IN INCHES |
| PRETRAVEL ———— .188 MAX | 1/8 HP-125 VAC; 1/4 HP-250 VAC | TOLERANCES ARE: |
| DIFFERENTIAL TRAVEL ———— .006 MAX | 1/2A-125 VDC; 1/4A-250 VDC | ONE PLACE (.0) ±.090 |
| OVERTRAVEL ———— .219 MIN | CODE L74 | TWO PLACE (.00) ±.015 |
| BASIC SWITCH REPLACEMENT ———— BZ-2RQ68 | CE 1.5A, 240 Vac | THREE PLACE (.000) ±.005 |
| | | ANGLES ±.005 |
| | | WEIGHT .70 LB |

| ISSUE | DRAWING NUMBER | RELEASE NO. | REPLACES |
|---|---|---|---|
| 9 | M BZE6-2RQ219 | PSR 29AUG07 | |

REVISIONS

| | | | |
|---|---|---|---|
| A | CO-38200 SLB 12 SEPT 77 | SEP 77 | CHECK |
| B | C05399-G CJH 2 MAY 84 | 14 | |
| C | C055989 CJH 8 NOV 84 | ROB | |
| D | C054958 TSK 26 FEB 85 | | CHECK |
| E | C072618 LJF 11 SEP 92 | SEP 77 | |
| F | 0016894 KRB 10 NOV 05 | 14 SEP | |
| G | 0033014 BS 29AUG07 | | |

| | | |
|---|---|---|
| CHECK | KPK | 14 SEPT 77 |
| DRAWN | SLB | 12 SEPT 77 |

RASTER FO-5285-1-A

Downloaded from Elcodis.com electronic components distributor