THIS DRAWING IS UNPUBLISHED. RELEASED FOR PUBLICATION 20
© COPYRIGHT 20 BY TYCO ELECTRONICS CORPORATION. ALL INTERNATIONAL RIGHTS RESERVED.

LOC	DIST
-	-

REVISIONS

P	LTR	DESCRIPTION	DATE	DWN	APVD
	1	PROPOSED	14SEP2010	CD	MM
	2	DRILL DEPTH CHANGED TO 9.0	01DEC2010	CD	MM
	3	OBSOLETE	25JAN2012	MM	MM

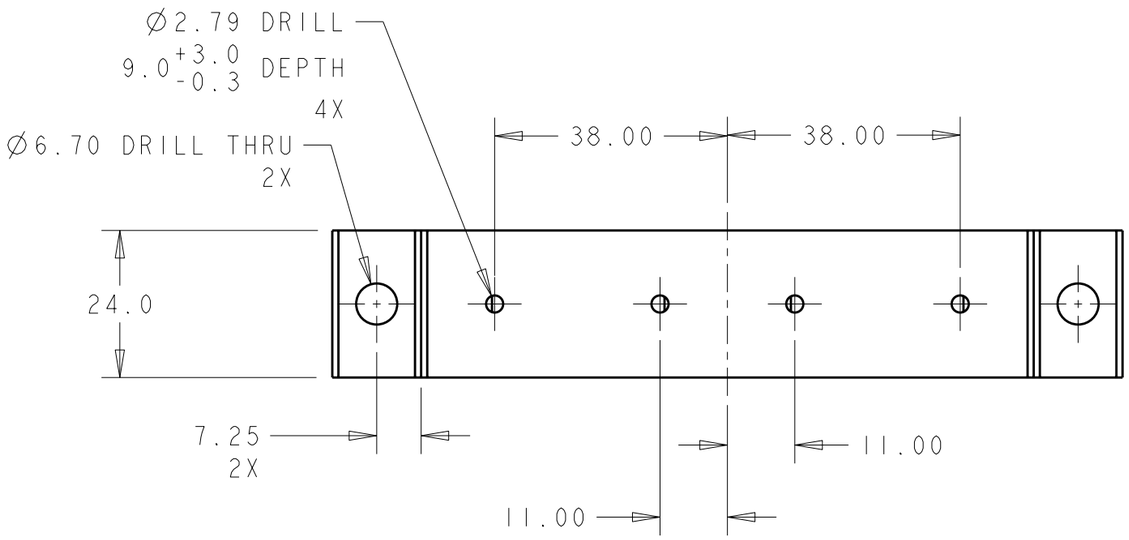

1. MATERIAL:
   -HEAT SINK: ALUMINUM
2. MUST COMPLY WITH DIRECTIVE 2002/95/EC (ROHS)

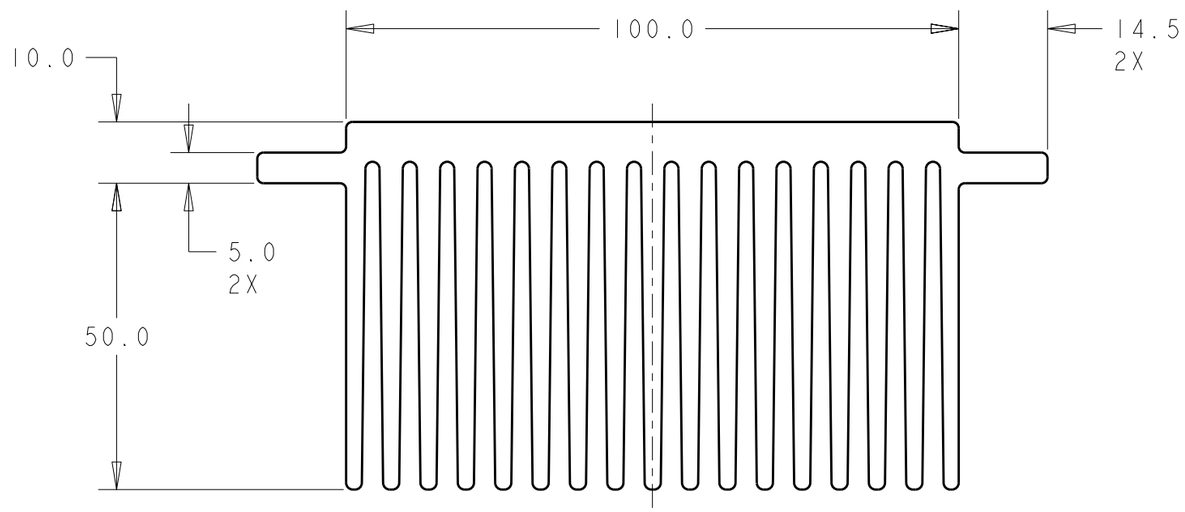

OBSOLETE

TYCO ELECTRONICS
CONFIDENTIAL
AND PROPRIETARY

PROPOSED DESIGN
NOT PRODUCTION TOOLED

DESIGN IS SUBJECT TO
CHANGE WITHOUT NOTICE

2154168-1

PART NUMBER

THIS DRAWING IS A CONTROLLED DOCUMENT FOR TYCO ELECTRONICS CORPORATION IT IS SUBJECT TO CHANGE AND THE CONTROLLING ENGINEERING ORGANIZATION SHOULD BE CONTACTED FOR THE LATEST REVISION.

DIMENSIONS: mm

TOLERANCES UNLESS OTHERWISE SPECIFIED:

0 PLC	±-
1 PLC	±0.2
2 PLC	±0.13
3 PLC	±-
4 PLC	±-
ANGLES	±3°

MATERIAL

FINISH -

DWN C.DAILY 14SEP2010
CHK MOSTOLLER 14SEP2010
APVD -

PRODUCT SPEC -

APPLICATION SPEC -

WEIGHT -

CUSTOMER DRAWING

Tyco Electronics Corporation
Harrisburg, PA 17105-3608

PRELIMINARY

NAME
HEAT SINK,
24 X 100 BOARD
-

SIZE	CAGE CODE	DRAWING NO	RESTRICTED TO
A3	00779	C-2154168	-

SCALE 1:1 SHEET 1 OF 1 REV 3

1470-19 (2/09)

Pro/ENGINEER DRAWING