THIS DRAWING IS UNPUBLISHED. RELEASED FOR PUBLICATION 2007
© COPYRIGHT 2007 BY TYCO ELECTRONICS CORPORATION ALL RIGHTS RESERVED.

| LOC | DIST |
|---|---|
| GP | 00 |

REVISIONS

| P | LTR | DESCRIPTION | DATE | DWN | APVD |
|---|---|---|---|---|---|
| | A | RELEASED PER ECO-13-000076 | 16JAN2013 | CJV | EDB |

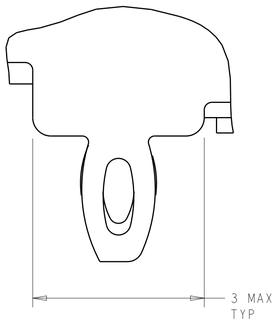


DETAIL S (12)
SCALE 20:1

1. MATERIALS:
   CAGE ASSEMBLY: NICKEL SILVER, 0.25 THICK
   EMI SPRINGS: COPPER ALLOY
   FRONT FLANGE: ZINC ALLOY
   HEAT SINK: ALUMINUM
   HEAT SINK CLIP: STAINLESS STEEL
2. PITCH BETWEEN PORTS OF ONE 1X3 CAGE ASSEMBLY.
3. SPACING BETWEEN CAGES ON THE SAME PC BOARD, TO BE SPECIFIED BY CUSTOMER, MUST COMPLY WITH MINIMUM DIMENSIONS SHOWN.
4. REFERENCE APPLICATION SPEC 114-_____ FOR RECOMMENDED DRILL HOLE DIAMETER AND PLATING THICKNESS.
5. DATUMS AND BASIC DIMENSIONS ESTABLISHED BY CUSTOMER.
6. DIMENSION C IS THE NOMINAL THICKNESS OF CUSTOMER SUPPLIED PC BOARD.
   MINIMUM SINGLE SIDED PC BOARD THICKNESS: 1.45mm
   MINIMUM DOUBLE SIDED PC BOARD THICKNESS: 2.2mm PER QSFP
7. HEAT SINKS AND CLIPS SHIPPED ASSEMBLED TO CAGE ASSEMBLY.
   CAGE ASSEMBLY MAY BE PRESSED INTO THE PCB AS SHIPPED.
8. DATUM A IS TOP SURFACE OF PC BOARD.
9. DIMENSION APPLIES WITH MODULE INSERTED IN CAGE.
10. UNPLATED THRU HOLE.
11. MATES WITH QSFP MSA COMPATIBLE TRANSCEIVER.
12. SURFACE TRACES PERMITTED WITHIN THIS AREA EXCEPT WHERE CAGE STANDOFFS, SHOWN IN DETAIL S, CONTACT PC BOARD.
13. BASELINE FOR THESE DIMENSIONS IS THE CENTER OF COMPLIANT PIN HOLE.
14. DATE CODE (YYWWD) MARKED ON TOP OF CAGE AND CONCEALED BY HEAT SINKS APPLIES TO CAGE ASSEMBLY ONLY.
15. REFERENCE APP SPEC 114-_____ FOR GASKET THICKNESS CALCULATION.
16. FINISH:
   EMI SPRINGS: 2µm MINIMUM TIN
   FRONT FLANGE: 3µm MINIMUM TIN OVER 1.27µm MINIMUM NICKEL
   OVER 5.08µm MINIMUM COPPER
   HEAT SINK: NICKEL.

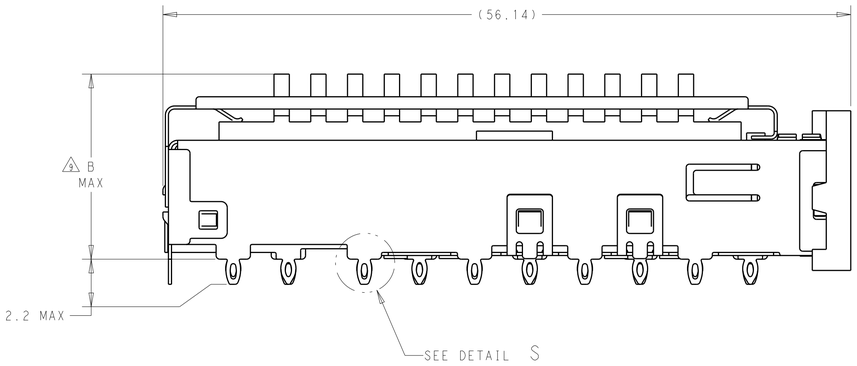


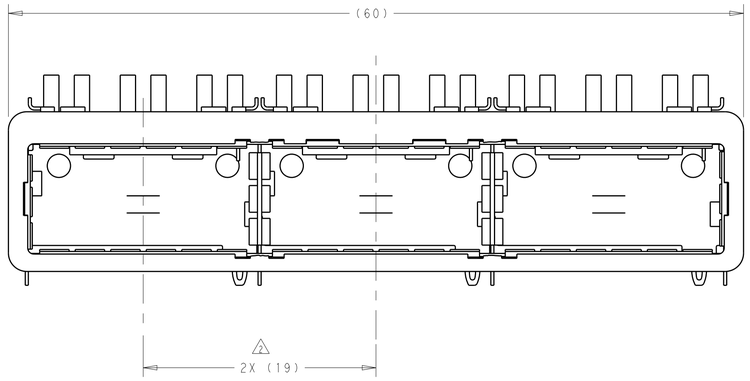


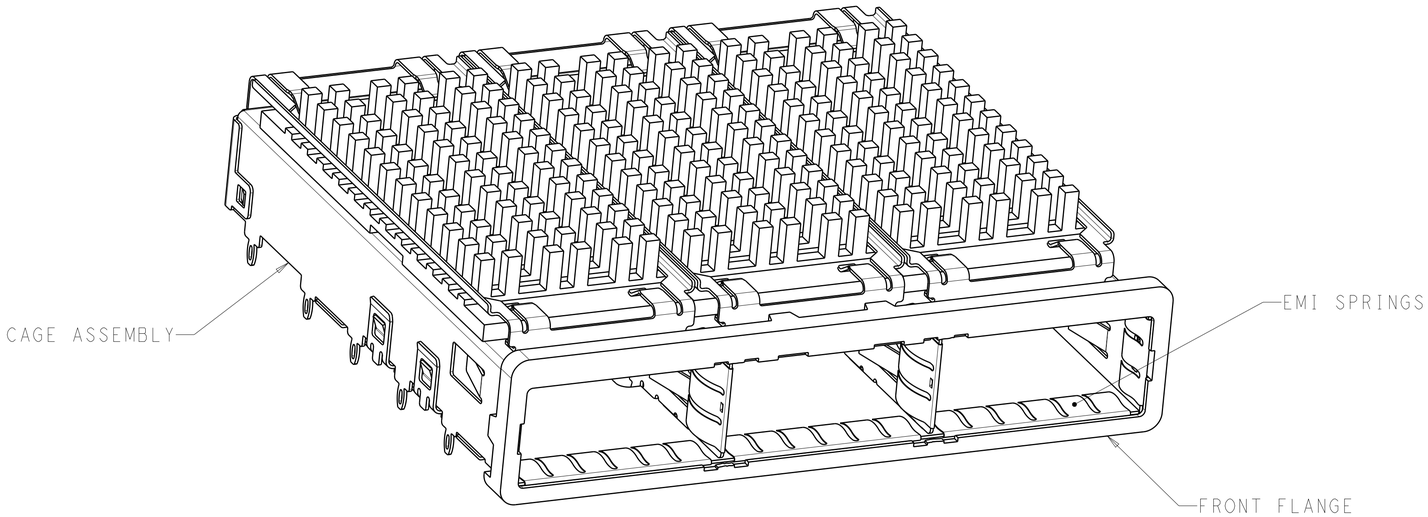


| | | |
|---|---|---|
| 23.0 | NETWORKING | 2173239-3 |
| 16.0 | SAN | 2173239-2 |
| 13.7 | PCI | 2173239-1 |
| B | HEAT SINK PROFILE | PART NUMBER |

THIS DRAWING IS A CONTROLLED DOCUMENT. DIMENSIONING AND TOLERANCING PER ASME Y14.5M-2009

DIMENSIONS: mm

TOLERANCES UNLESS OTHERWISE SPECIFIED:
0 PLC ±
1 PLC ±0.1
2 PLC ±0.1
3 PLC ±0.013
4 PLC ±0.0001
ANGLES ±

MATERIAL (1)
FINISH (16)

DWN J.V.D.HEIJDEN 12AUG2011
CHK R.VERBEET 12AUG2011
APVD T.D.BOER 15AUG2011
PRODUCT SPEC 108-_____
APPLICATION SPEC 114-_____
WEIGHT -

TE Connectivity

NAME 1X3 CAGE ASSEMBLY, BEHIND BEZEL, W/ HEAT SINKS, zQSFP+
-

| SIZE | CAGE CODE | DRAWING NO | RESTRICTED TO |
|---|---|---|---|
| A1 | 00779 | C-2173239 | - |

CUSTOMER DRAWING | SCALE 1:1 | SHEET 1 OF 5 | REV A

THIS DRAWING IS UNPUBLISHED. RELEASED FOR PUBLICATION 2007
© COPYRIGHT 2007 BY TYCO ELECTRONICS CORPORATION ALL RIGHTS RESERVED.

| LOC | DIST |
|---|---|
| GP | 00 |

REVISIONS

| P | LTR | DESCRIPTION | DATE | DWN | APVD |
|---|---|---|---|---|---|
| | - | SEE SHEET 1 | - | - | - |

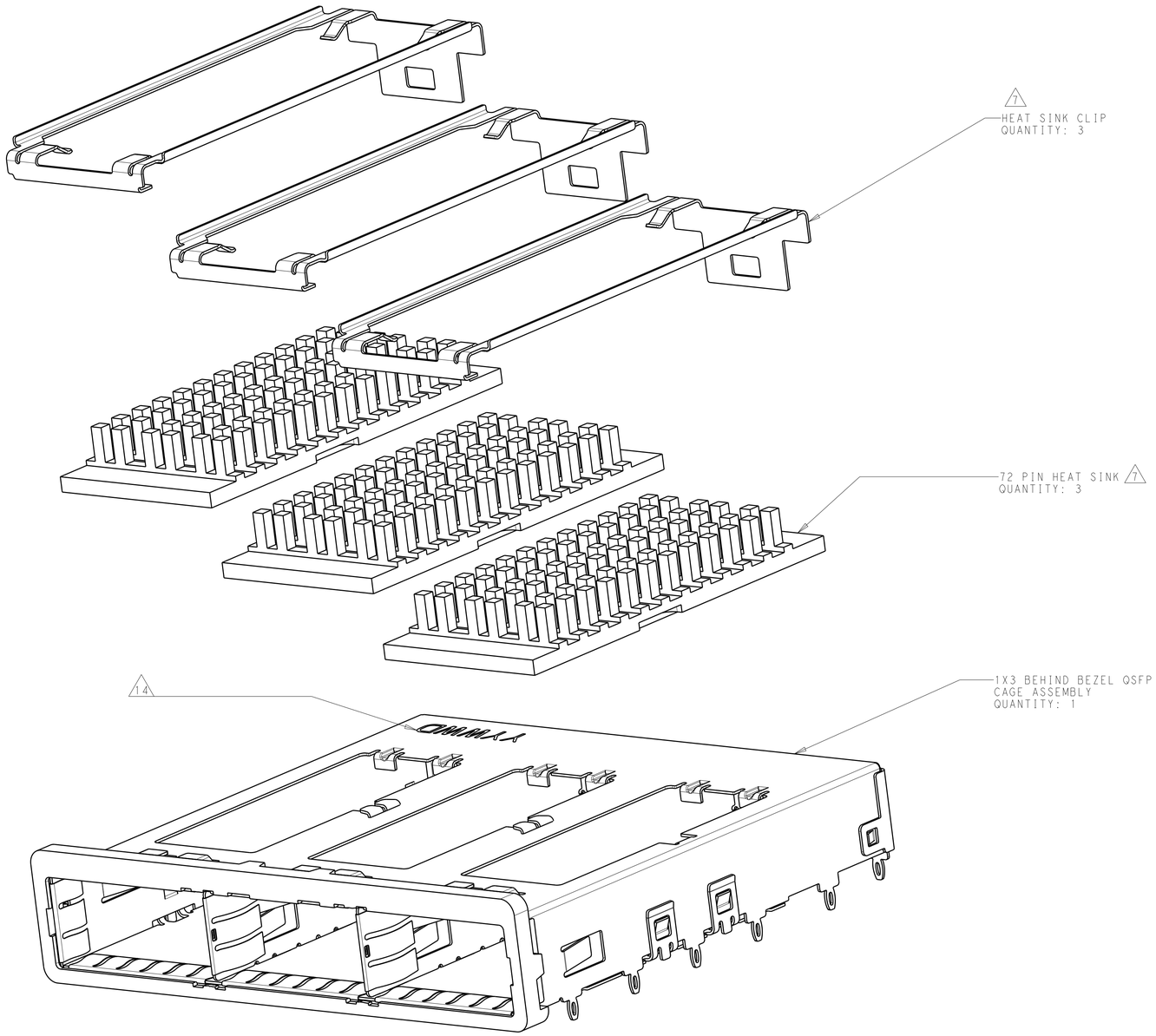


THIS DRAWING IS A CONTROLLED DOCUMENT.
DIMENSIONING AND TOLERANCING
PER ASME Y14.5M-2009

DIMENSIONS: mm

TOLERANCES UNLESS OTHERWISE SPECIFIED:

| | |
|---|---|
| 0 PLC | ± |
| 1 PLC | ±0.1 |
| 2 PLC | ±0.1 |
| 3 PLC | ±0.013 |
| 4 PLC | ±0.0001 |
| ANGLES | ± |

MATERIAL

FINISH

DWN J.V.D.HEIJDEN 12AUG2011
CHK R.VERBEET 12AUG2011
APVD T.D.BOER 15AUG2011

PRODUCT SPEC 108-____
APPLICATION SPEC 114-____
WEIGHT -

TE Connectivity

NAME 1X3 CAGE ASSEMBLY, BEHIND BEZEL, W/ HEAT SINKS, zQSFP+
-

| SIZE | CAGE CODE | DRAWING NO | RESTRICTED TO |
|---|---|---|---|
| A1 | 00779 | C-2173239 | - |

CUSTOMER DRAWING

| SCALE | SHEET | OF | REV |
|---|---|---|---|
| 1:1 | 2 | 5 | A |

THIS DRAWING IS UNPUBLISHED. RELEASED FOR PUBLICATION 2007
© COPYRIGHT 2007 BY TYCO ELECTRONICS CORPORATION ALL RIGHTS RESERVED.

| LOC | DIST |
|---|---|
| GP | 00 |

REVISIONS

| P | LTR | DESCRIPTION | DATE | DWN | APVD |
|---|---|---|---|---|---|
| | - | SEE SHEET 1 | - | - | - |

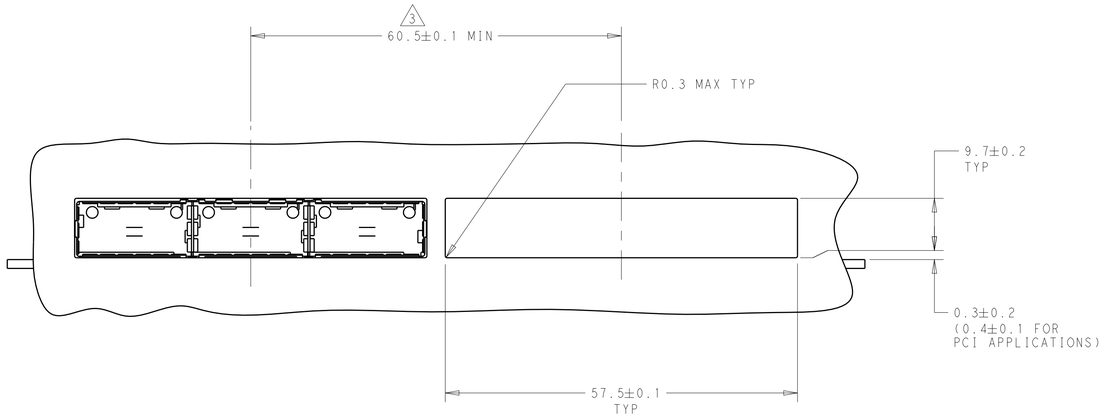


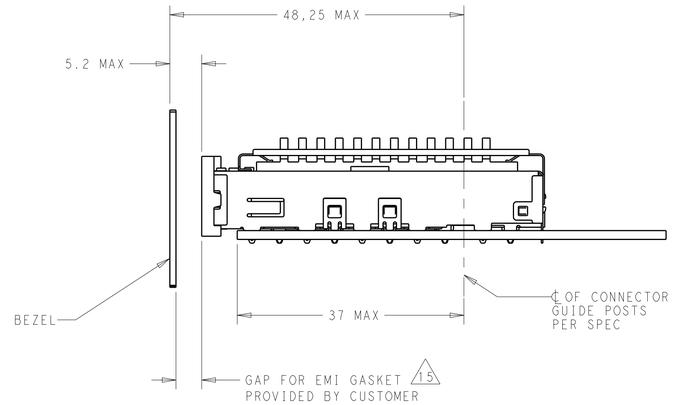


ONE SIDED CONFIGURATION
SCALE 2:1

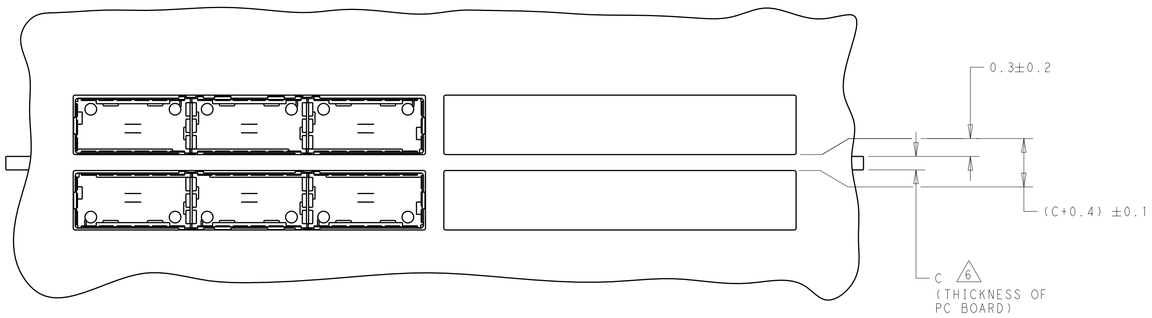


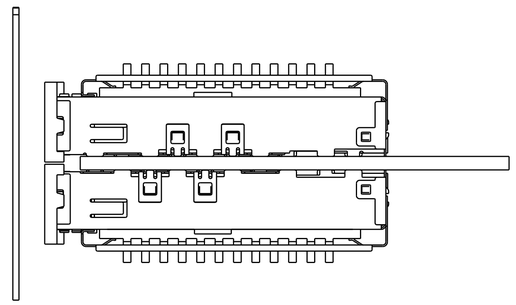

BELLY TO BELLY CONFIGURATION SIMILAR
TO ONE SIDED EXCEPT WHERE NOTED
SCALE 2:1

THIS DRAWING IS A CONTROLLED DOCUMENT.
DIMENSIONING AND TOLERANCING
PER ASME Y14.5M-2009

DIMENSIONS: mm

TOLERANCES UNLESS OTHERWISE SPECIFIED:

| | |
|---|---|
| 0 PLC | ± |
| 1 PLC | ±0.1 |
| 2 PLC | ±0.1 |
| 3 PLC | ±0.013 |
| 4 PLC | ±0.0001 |
| ANGLES | ± |

MATERIAL

FINISH

| | |
|---|---|
| DWN | J.V.D.HEIJDEN 12AUG2011 |
| CHK | R.VERBEET 12AUG2011 |
| APVD | T.D.BOER 15AUG2011 |
| PRODUCT SPEC | 108-____ |
| APPLICATION SPEC | 114-_____ |
| WEIGHT | - |

TE Connectivity

NAME 1X3 CAGE ASSEMBLY, BEHIND BEZEL, W/ HEAT SINKS, zQSFP+
-

| SIZE | CAGE CODE | DRAWING NO | RESTRICTED TO |
|---|---|---|---|
| A1 | 00779 | C-2173239 | - |

CUSTOMER DRAWING | SCALE 4:1 | SHEET 3 OF 5 | REV A

4805 (3/11)

THIS DRAWING IS UNPUBLISHED. RELEASED FOR PUBLICATION 2007
© COPYRIGHT 2007 BY TYCO ELECTRONICS CORPORATION ALL RIGHTS RESERVED.

| LOC | DIST |
|---|---|
| GP | 00 |

REVISIONS

| P | LTR | DESCRIPTION | DATE | DWN | APVD |
|---|---|---|---|---|---|
| | - | SEE SHEET 1 | - | - | - |

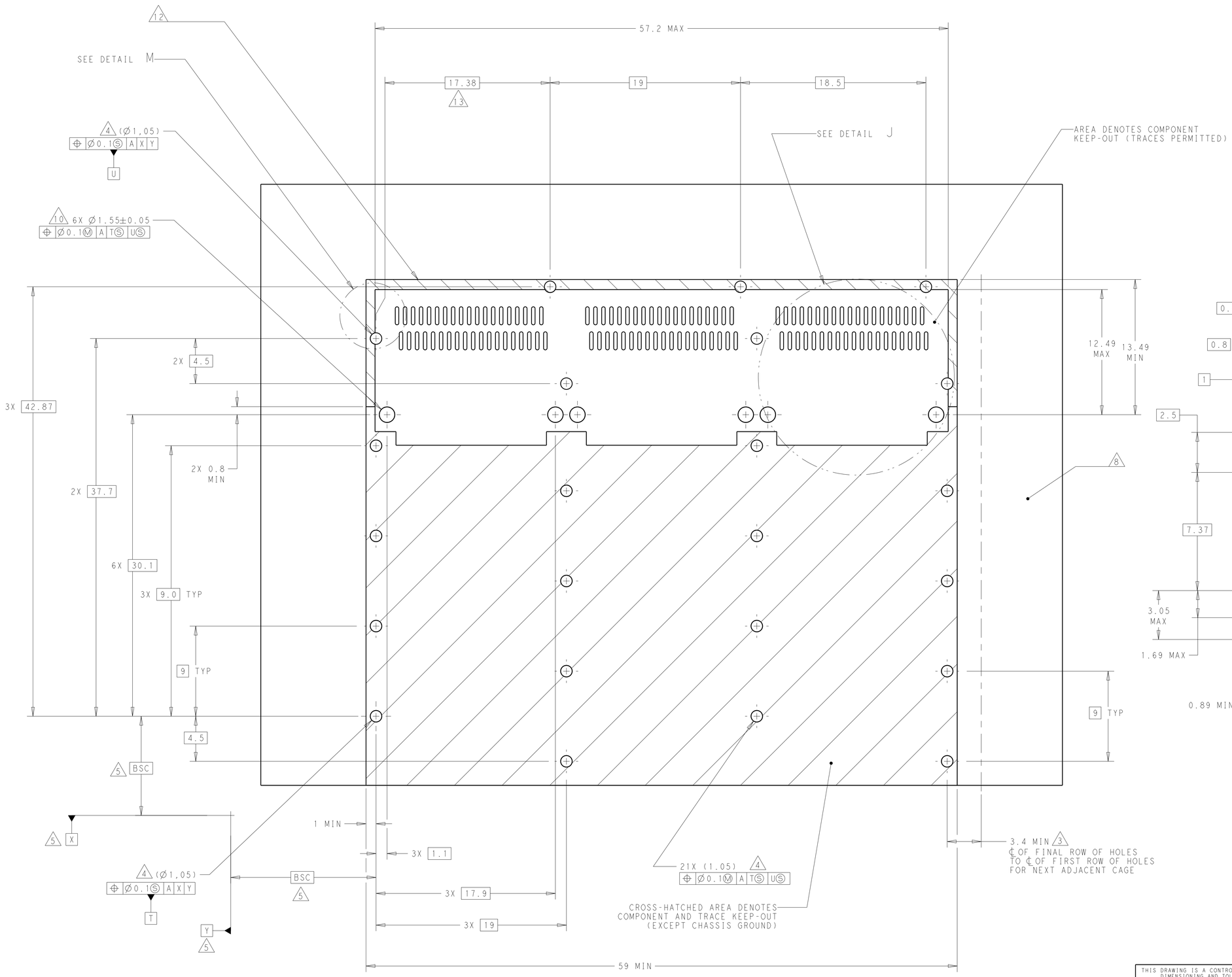


RECOMMENDED PC BOARD LAYOUT
SINGLE SIDE MOUNT CONFIGURATION
SCALE 5:1

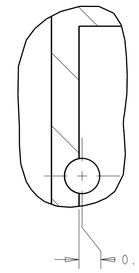


DETAIL M
SCALE 10:1

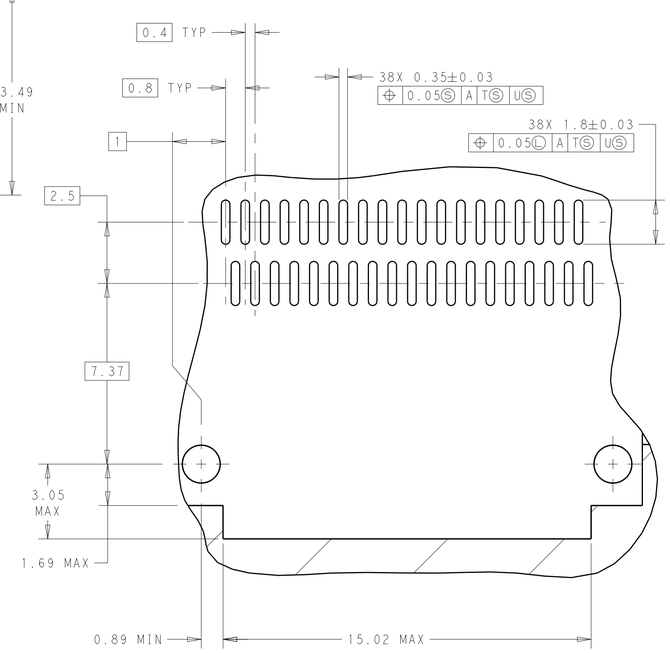


DETAIL J
3 PLACES
SCALE 8:1

THIS DRAWING IS A CONTROLLED DOCUMENT. DIMENSIONING AND TOLERANCING PER ASME Y14.5M-2009

DIMENSIONS: mm

TOLERANCES UNLESS OTHERWISE SPECIFIED:
0 PLC ±
1 PLC ±0.1
2 PLC ±0.1
3 PLC ±0.013
4 PLC ±0.0001
ANGLES ±

MATERIAL
FINISH

DWN J.V.D.HEIJDEN 12AUG2011
CHK R.VERBEET 12AUG2011
APVD T.D.BOER 15AUG2011
PRODUCT SPEC 108-----
APPLICATION SPEC 114-----
WEIGHT -

TE Connectivity

NAME 1X3 CAGE ASSEMBLY, BEHIND BEZEL, W/ HEAT SINKS, zQSFP+ -

| SIZE | CAGE CODE | DRAWING NO | RESTRICTED TO |
|---|---|---|---|
| A1 | 00779 | C-2173239 | - |

CUSTOMER DRAWING | SCALE 1:1 | SHEET 4 OF 5 | REV A

4805 (3/11)

THIS DRAWING IS UNPUBLISHED. RELEASED FOR PUBLICATION 2007
© COPYRIGHT 2007 BY TYCO ELECTRONICS CORPORATION ALL RIGHTS RESERVED.

| LOC | DIST |
|---|---|
| GP | 00 |

REVISIONS

| P | LTR | DESCRIPTION | DATE | DWN | APVD |
|---|---|---|---|---|---|
| | - | SEE SHEET 1 | - | - | - |

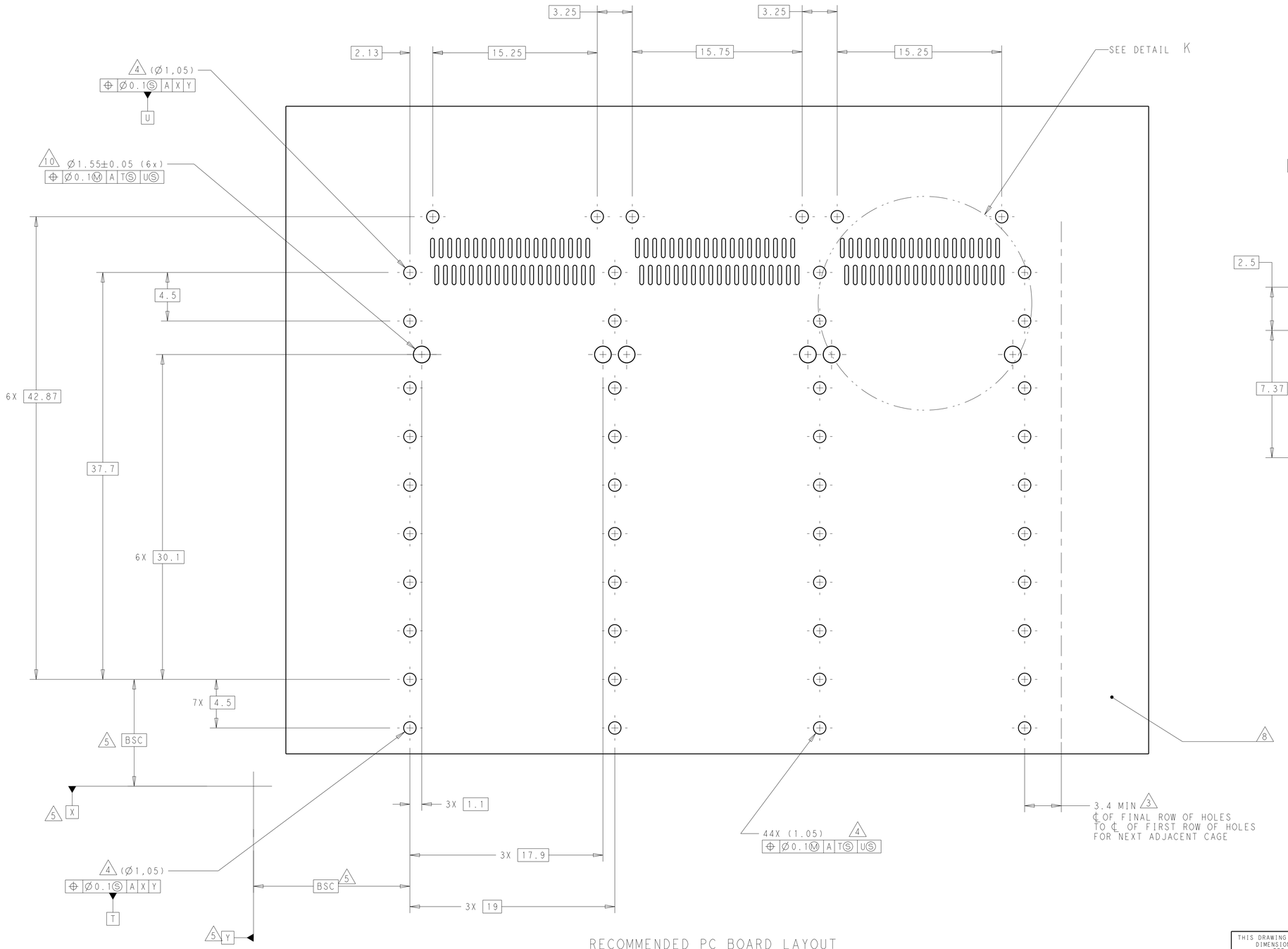


RECOMMENDED PC BOARD LAYOUT
BELLY TO BELLY CONFIGURATION
SEE SHEET 4 FOR COMPONENT
AND TRACE KEEP-OUTS
SCALE 5:1

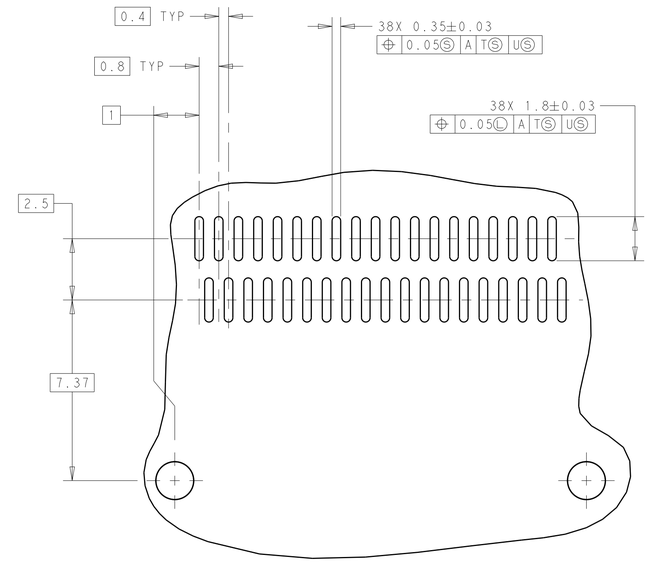


DETAIL K
3 PLACES
SCALE 8:1

THIS DRAWING IS A CONTROLLED DOCUMENT. DIMENSIONING AND TOLERANCING PER ASME Y14.5M-2009

DIMENSIONS: mm

TOLERANCES UNLESS OTHERWISE SPECIFIED:
0 PLC ±-
1 PLC ±0.1
2 PLC ±0.1
3 PLC ±0.013
4 PLC ±0.0001
ANGLES ±-

MATERIAL
FINISH

| | | |
|---|---|---|
| DWN | J.V.D.HEIJDEN | 12AUG2011 |
| CHK | R.VERBEET | 12AUG2011 |
| APVD | T.D.BOER | 15AUG2011 |
| PRODUCT SPEC | 108-____ - | |
| APPLICATION SPEC | 114-_____ | |
| WEIGHT | - | |

TE Connectivity

NAME 1X3 CAGE ASSEMBLY, BEHIND BEZEL, W/ HEAT SINKS, zQSFP+ -

| SIZE | CAGE CODE | DRAWING NO | RESTRICTED TO |
|---|---|---|---|
| A1 | 00779 | C-2173239 | - |

CUSTOMER DRAWING | SCALE 1:1 | SHEET 5 OF 5 | REV A

4805 (3/11)

# Mouser Electronics

Authorized Distributor

Click to View Pricing, Inventory, Delivery & Lifecycle Information:

TE Connectivity:

2173239-1