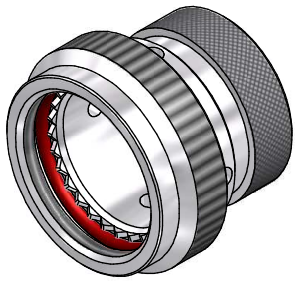

CODE 41 - HEAT SHRINK BOOT BACKSHELL

202M216-19C

- SERIES
- ORDER NUMBER (TABLE 1)
- MATERIAL
  REFER TO CH00-0250-004
- FINISH
  REFER TO CH00-0250-004
- MODIFICATION CODE
  REFER TO CH00-0250-004 ⟨2⟩

NOTES:

1. THIS PRODUCT IS DESIGNED TO TERMINATE A HEAT SHRINKABLE LIPPED BOOT TO A CONNECTOR.

⟨2.⟩ FOR ADDITIONAL DIMENSIONS, ORDERING INFORMATION AND MODIFICATIONS, SEE CH00-0250-004.

3. ADAPTOR TO BE PERMANENTLY MARKED/BAGGED AND LABELLED WITH CODE IDENTIFICATION NUMBER AND PART NUMBER. (e.g. 06090-202M216-19B).

⟨4.⟩ BACKSHELL MATES TO MIL-C-38999 SERIES I & II, CLASS E & T, MS27466, MS27467, MS27468, MS27472, MS27473, MS27474, MS27479, MS27480, MS27481, MS27484, MS27497, MS27653, MS27656 CONNECTORS.

If this document is printed it becomes uncontrolled. Check for the latest revision

DRAWN	K.WINCZURA	DATE 19/02/2015	3RD ANGLE PROJECTION NOT TO SCALE
CHECKED		19/02/2015	
APPROVED	K.SHEPPARD	03/03/2015	UNLESS OTHERWISE SPECIFIED ALL DIMENSIONS IN MILLIMETRES GENERAL TOL LINEAR +/-0,25MM ANGULAR +/- 1°
APPROVED	H.SMITH	01/09/2015	

REVISIONS

LTR	DESCRIPTION	DATE	APPROVED
N	REVISED PER ECN AD93016		
P	REVISED PER ECO-15-011999	01/09/2015	H.SMITH

TE CAGE CODE: 06090
POLAMCO/TE CAGE CODE: U5792

TITLE:

HEAT SHRINK BOOT BACKSHELL

ASSY USED ON:

MIL-DTL-38999 SERIES I & II (CODE 41)

Polamco TE connectivity

TE CONNECTIVITY - POLAMCO LTD RESERVES THE RIGHT TO AMEND THIS DRAWING AND THE INFORMATION SET FORTH HEREON AT ANY TIME. USERS SHOULD INDEPENDENTLY EVALUATE THE SUITABILITY OF THE PRODUCT FOR THEIR APPLICATION.

DRAWING NO:	DRAWING REV:	SHT
202M2XX	P	1

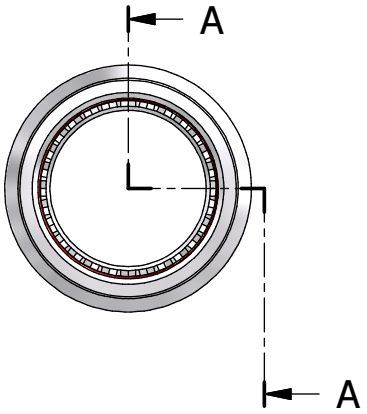

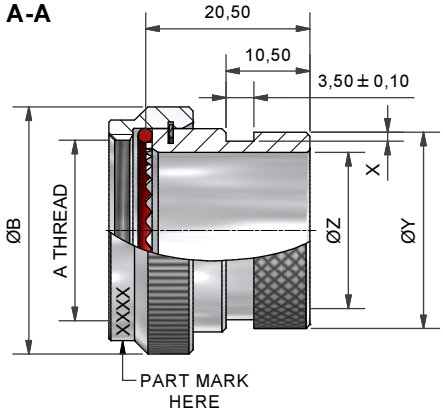

TABLE 1

ORDER NUMBER	SHELL SIZE SER 1 / SER 2	A THREAD	ØB MAX	X +0,20/-0,00	ØZ MIN	ØY +0,00/-0,50
08	09 / 08	7/16-28UNEF	18,3	1,12	6,60	13,50
10	11 / 10	9/16-24UNEF	21,5	1,12	10,00	15,40
12	13 / 12	11/16-24UNEF	24,5	1,12	12,90	19,70
14	15 / 14	13/16-20UNEF	27,8	1,12	16,10	21,30
16	17 / 16	15/16-20UNEF	30,8	1,12	19,30	24,50
18	19 / 18	1 1/16-18UNEF	34,1	1,12	21,70	26,50
20	21 / 20	1 3/16-18UNEF	37,3	1,75	24,80	31,00
22	23 / 22	1 5/16-18UNEF	40,5	1,75	28,20	34,40
24	25 / 24	1 7/16-18UNEF	43,7	1,75	31,30	36,60

DRAINHOLE OPTION

If this document is printed it becomes uncontrolled. Check for the latest revision

DRAWN	K.WINCZURA	DATE 19/02/2015	3RD ANGLE PROJECTION NOT TO SCALE
CHECKED		19/02/2015	
APPROVED	K.SHEPPARD	03/03/2015	UNLESS OTHERWISE SPECIFIED ALL DIMENSIONS IN MILLIMETRES GENERAL TOL LINEAR +/-0,25MM ANGULAR +/- 1°
APPROVED	H.SMITH	01/09/2015	

REVISIONS

LTR	DESCRIPTION	DATE	APPROVED
N	REVISED PER ECN AD93016		
P	REVISED PER ECO-15-011999	01/09/2015	H.SMITH

TE CAGE CODE: 06090
POLAMCO/TE CAGE CODE: U5792

TITLE:

HEAT SHRINK BOOT BACKSHELL

ASSY USED ON:

MIL-DTL-38999 SERIES I & II (CODE 41)

Polamco

TE connectivity

TE CONNECTIVITY - POLAMCO LTD RESERVES THE RIGHT TO AMEND THIS DRAWING AND THE INFORMATION SET FORTH HEREON AT ANY TIME. USERS SHOULD INDEPENDENTLY EVALUATE THE SUITABILITY OF THE PRODUCT FOR THEIR APPLICATION.

DRAWING NO:	DRAWING REV:	SHT
202M2XX	P	2

Mouser Electronics

Authorized Distributor

Click to View Pricing, Inventory, Delivery & Lifecycle Information:

TE Connectivity:

202M218-19C