THIS DRAWING IS UNPUBLISHED. RELEASED FOR PUBLICATION -.-.-
© COPYRIGHT - BY TYCO ELECTRONICS CORPORATION. ALL RIGHTS RESERVED.

| LOC | DIST |
|---|---|
| DF | DO |

REVISIONS

| P | LTR | DESCRIPTION | DATE | DWN | APVD |
|---|---|---|---|---|---|
| | G | REV PER ECO 08-028122 | 21NOV08 | PK | BW |

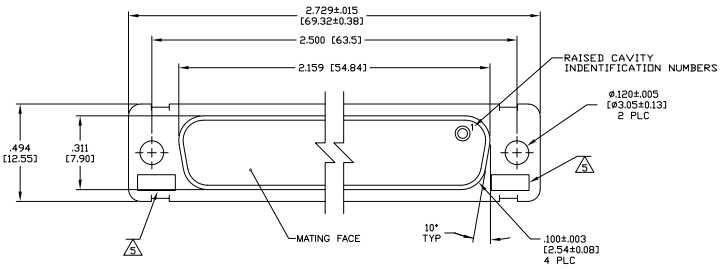


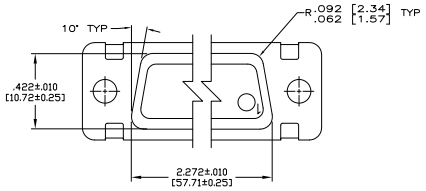


VIEW Z–Z

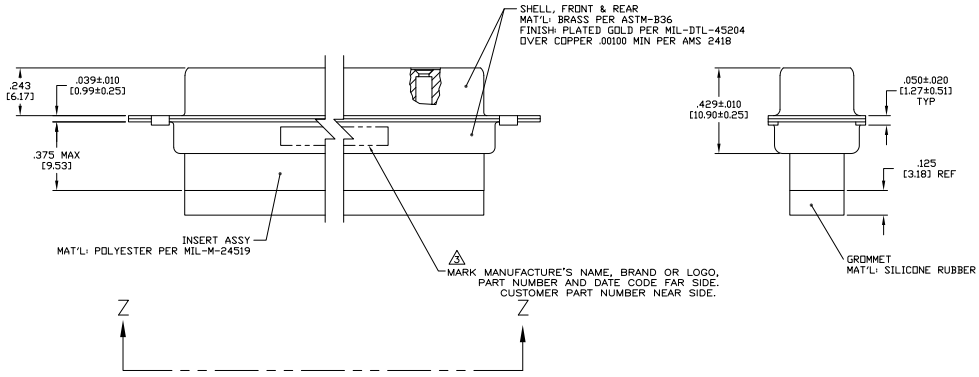


1. THIS CONNECTOR ASSEMBLY IS SUPPLIED WITH Be Cu CONTACT RETENTION CLIPS INSTALLED IN THE INSERT ASSEMBLY.
2. THIS CONNECTOR ASSEMBLY MATES WITH ANY PLUG CONNECTOR WITH THE SAME INSERT ARRANGEMENT AND DIMENSIONAL REQUIREMENTS PER MIL-C-24308.
3. MARKED WITH .047 [1.19]-.062 [1.57] HIGH CHARACTERS. FAR SIDE REFERS TO THE WIDE SIDE OF THE KEYSTONE. NEAR SIDE REFERS TO THE NARROW SIDE OF THE KEYSTONE.
4. MAXIMUM WIRE INSULATION TO BE USED WITH THIS CONNECTOR ASSEMBLY IS .068 [1.73] DIAMETER.

5. UL/CSA DESIGNATION MARKED IN THIS AREA.
6. SPECIAL REQUIREMENTS PER BOEING 1A01 DOCUMENT.
7. BUILT TO ORDER, NO INVENTORY OF THIS PART NUMBER IS TO BE KEPT. SINGLE LOT DATE CODE REQUIRED.

| REMARKS | CUSTOMER MARKING | PART NUMBER |
|---|---|---|
| 6 7 | 1A01–024RHW | 1–211636–1 |
| –– | ––– | 211636–4 |
| 6 7 | 1A01–024RHA | 211636–1 |

THIS DRAWING IS A CONTROLLED DOCUMENT.

DIMENSIONS: INCHES [mm]
TOLERANCE UNLESS OTHERWISE SPECIFIED:
0 PLC ± –
1 PLC ± –
2 PLC ± –.–
3 PLC ± .005 [0.13]
4 PLC ± ±.1°
ANGLES

MATERIAL: SEE CALLOUTS
FINISH: SEE CALLOUTS

| | | |
|---|---|---|
| DR | C.C.THOMAS | 3-26-07 |
| CHK | D.MILLER | 3-27-07 |
| APVD | D.MILLER | 3-27-07 |
| PRODUCT SPEC | – | |
| APPLICATION SPEC | – | |
| WEIGHT | – | |

CUSTOMER DRAWING

Tyco Electronics Corporation
Harrisburg, PA 17105-3608

NAME: RECEPTACLE ASSEMBLY,AMPLIMITE,37 POSITION, SIZE 4,SERIES 109,NON-MAGNETIC
–

| SIZE | CAGE CODE | DRAWING NO | RESTRICTED TO |
|---|---|---|---|
| A1 | 00779 | C-211636 | – |

SCALE 4:1 SHEET 1 OF 1 REV G

AMP 4805 REV 31MAR2000

Downloaded from Elcodis.com electronic components distributor