THIS DRAWING IS UNPUBLISHED. RELEASED FOR PUBLICATION -,- .
© COPYRIGHT 2010 BY TYCO ELECTRONICS CORPORATION. ALL RIGHTS RESERVED.

LOC	DIST
DW	—

REVISIONS

P	LTR	DESCRIPTION	DATE	DWN	APVD
	B	REVISED (ECR-12-006983)	03AUG'12	E.L.	W.K.

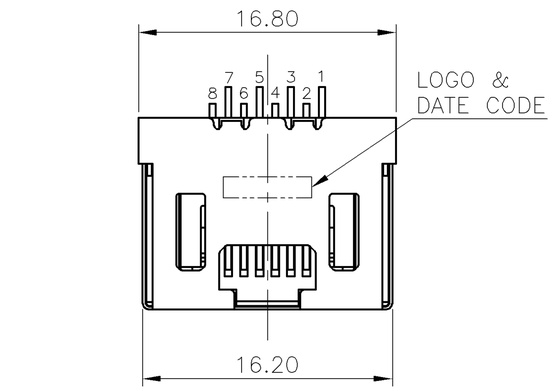

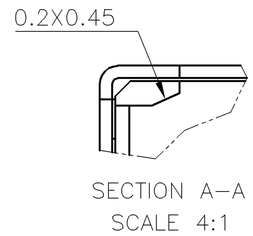

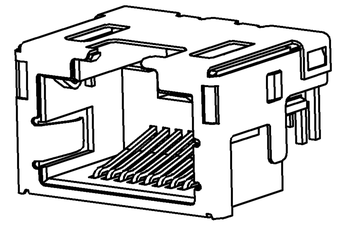

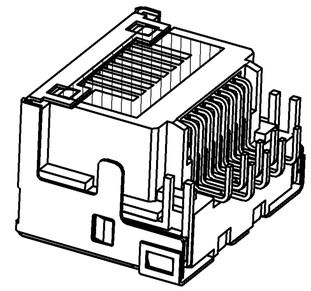

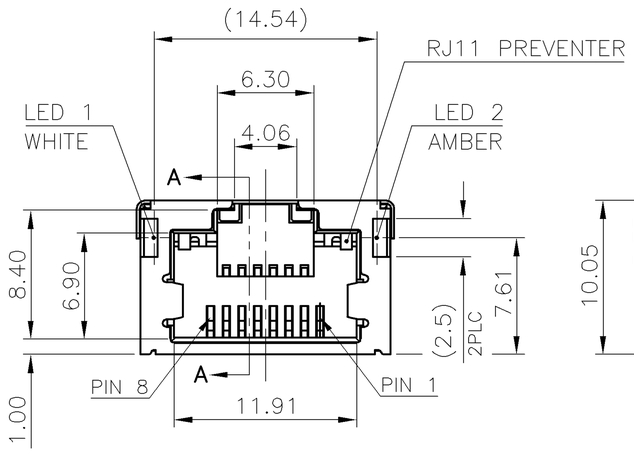

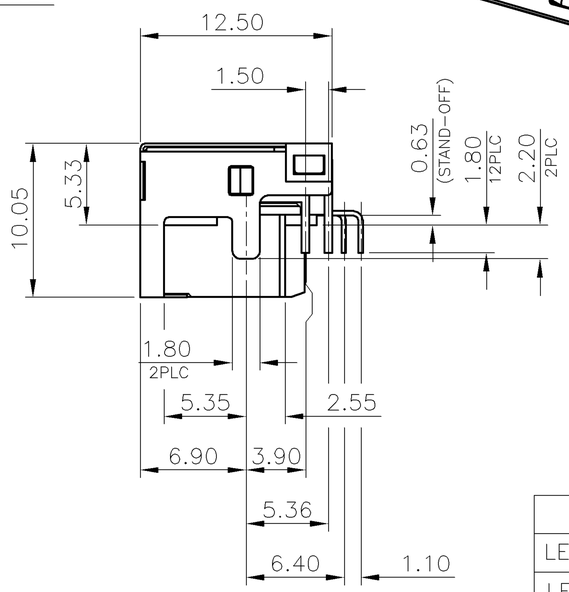

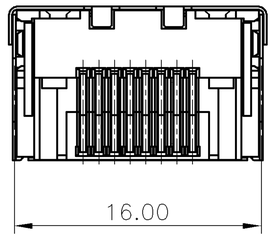

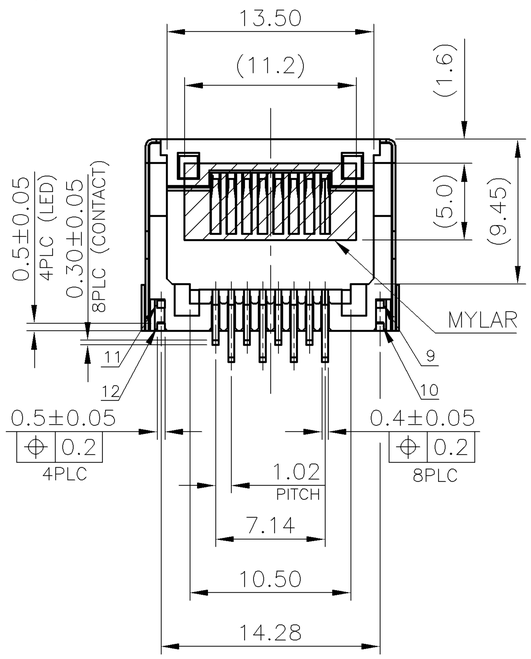

LED ELECTRICAL CHARACTERISTIC			
LED #	NODE	COLOR	SYMBOL
LED 1	12(+) 11(-)	WHITE	12 ▷| 11
LED 2	10(+) 9(-)	AMBER	10 ▷| 9

NOTES:

1. MATERIAL:
   - 1.1 HOUSING: HTN WITH 30% GF, UL94 V-0, BLACK COLOR.
   - 1.2 CONTACTS: PHOSPHOR BRONZE.
   - 1.3 SHELL: BRASS.
   - 1.4 RJ11 PREVENTER: STAINLESS STEEL
   - 1.5 LED MODULAR: EPOXY & STEEL.
   - 1.6 MYLAR: PI., YELLOW COLOR.
2. FINISH:
   - 2.1 CONTACTS: 0.127um [5u"] MIN. GOLD PLATED ON CONTACT AREA.
     2.032um [80u"] MIN. MATTE-TIN ON SOLDER TAIL.
     1.27um [50u"] MIN. NICKEL UNDERPLATED OVERALL.
   - 2.2 SHELL: 1.27um [50u"] MIN. NICKEL PLATED.
   - 2.3 LED: 1.27um [50u"] MIN. SILVER PLATED (TOP PLATED),
     0.127um [5u"] MIN. NICKEL PLATED (MIDDLE PLATED),
     0.508um [20u"] MIN. COPPER UNDERPLATED OVERALL.
3. REFLOW SOLDER CAPABLE TO 260°C PER TEC-109-201, CONDITION B.
4. LOW HALOGEN SPEC:
   - CHLORINE(Cl): 900ppm MAX.
   - BROMINE(Br): 900ppm MAX.
   - CHLORIN (Cl) + BROMINE (Br): 1500 ppm MAX.

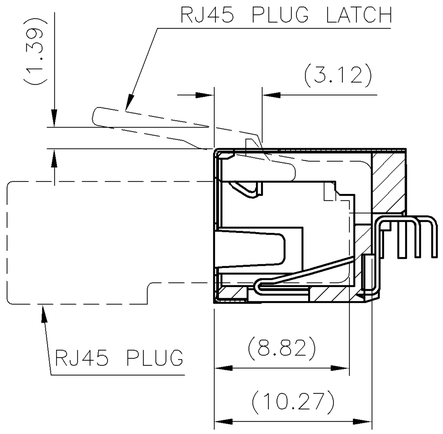

AT MATED RJ45 PLUG ASSY
(REFERENCE)

2041468-1
PART NUMBER

THIS DRAWING IS A CONTROLLED DOCUMENT.

DIMENSIONS: mm

TOLERANCES UNLESS OTHERWISE SPECIFIED:

0 PLC	± -
1 PLC	± 0.3
2 PLC	± 0.2
3 PLC	± 0.15
4 PLC	± -
ANGLES	± 3°

MATERIAL: SEE NOTE

FINISH: SEE NOTE

DWN	E. LIU	16APR2012
CHK	S. CHIEN	16APR2012
APVD	W. KODAMA	16APR2012
PRODUCT SPEC	108-57901	
APPLICATION SPEC	—	
WEIGHT	1.784 GRAMS	

TE Connectivity

NAME: MODULAR JACK CONNECTOR
RJ45 WITH LED, 8P8C, TAB UP, SHIELDED,
OFFSET, DIP TYPE, H=5.33mm

SIZE	CAGE CODE	DRAWING NO	RESTRICTED TO
A3	00779	C-2041468	—

CUSTOMER DRAWING | SCALE — | SHEET 1 OF 3 | REV B

THIS DRAWING IS UNPUBLISHED. RELEASED FOR PUBLICATION -,- .
© COPYRIGHT 2010 BY TYCO ELECTRONICS CORPORATION. ALL RIGHTS RESERVED.

LOC	DIST
DW	—

REVISIONS

P	LTR	DESCRIPTION	DATE	DWN	APVD
		SEE SHEET 1.			

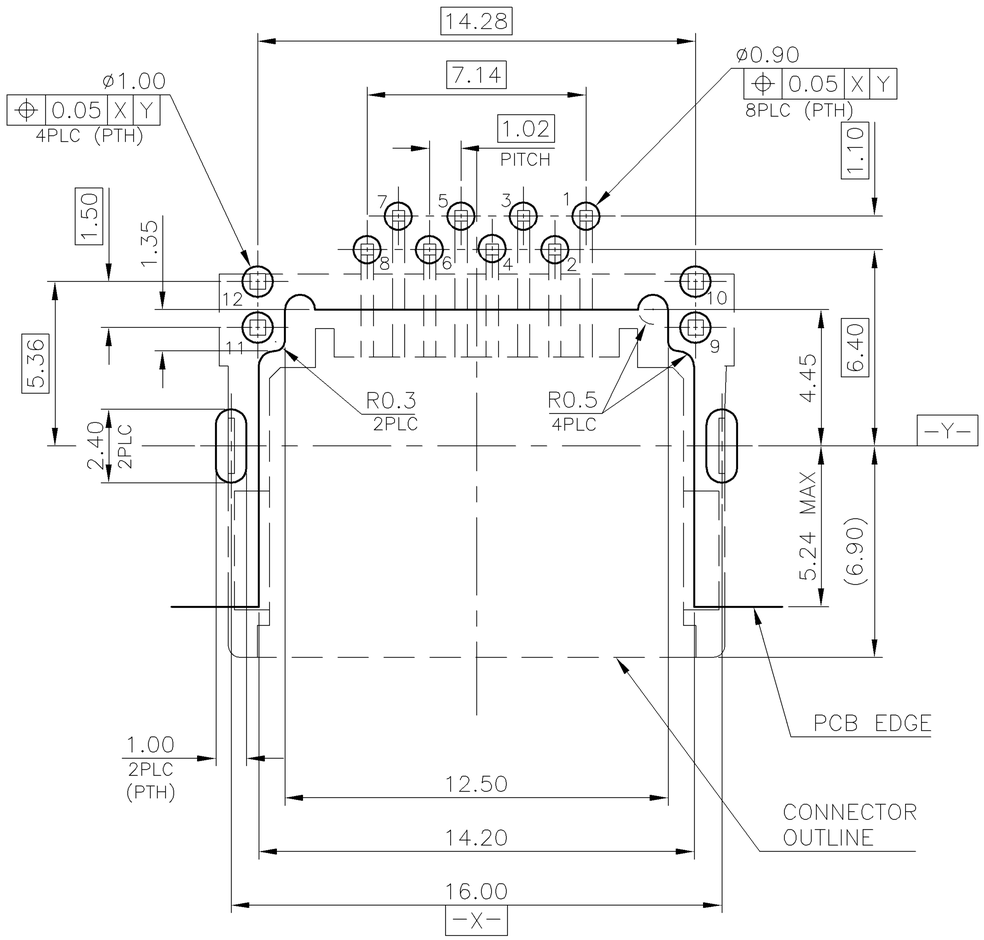

RECOMMENDED PCB LAYOUT (COMPONEND SIDE)
TOLERANCE: ±0.05, PCB THICKNESS: 1.2MM

THIS DRAWING IS A CONTROLLED DOCUMENT.

DIMENSIONS: mm

TOLERANCES UNLESS OTHERWISE SPECIFIED:

0 PLC	± –
1 PLC	± 0.3
2 PLC	± 0.2
3 PLC	± 0.15
4 PLC	± –
ANGLES	± 3°

MATERIAL –

FINISH –

DWN –
CHK –
APVD –
PRODUCT SPEC –
APPLICATION SPEC –
WEIGHT –

TE Connectivity

NAME
MODULAR JACK CONNECTOR
RJ45 WITH LED, 8P8C, TAB UP, SHIELDED,
OFFSET, DIP TYPE, H=5.33mm

SIZE	CAGE CODE	DRAWING NO	RESTRICTED TO
A3	00779	C-2041468	—

CUSTOMER DRAWING | SCALE — | SHEET 2 OF 3 | REV B

THIS DRAWING IS UNPUBLISHED. RELEASED FOR PUBLICATION -,- .
© COPYRIGHT 2010 BY TYCO ELECTRONICS CORPORATION. ALL RIGHTS RESERVED.

LOC	DIST
DW	—

REVISIONS

P	LTR	DESCRIPTION	DATE	DWN	APVD
		SEE SHEET 1.			

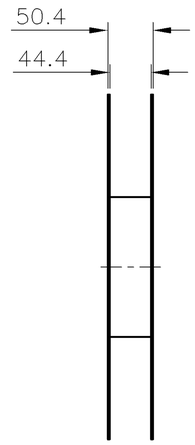

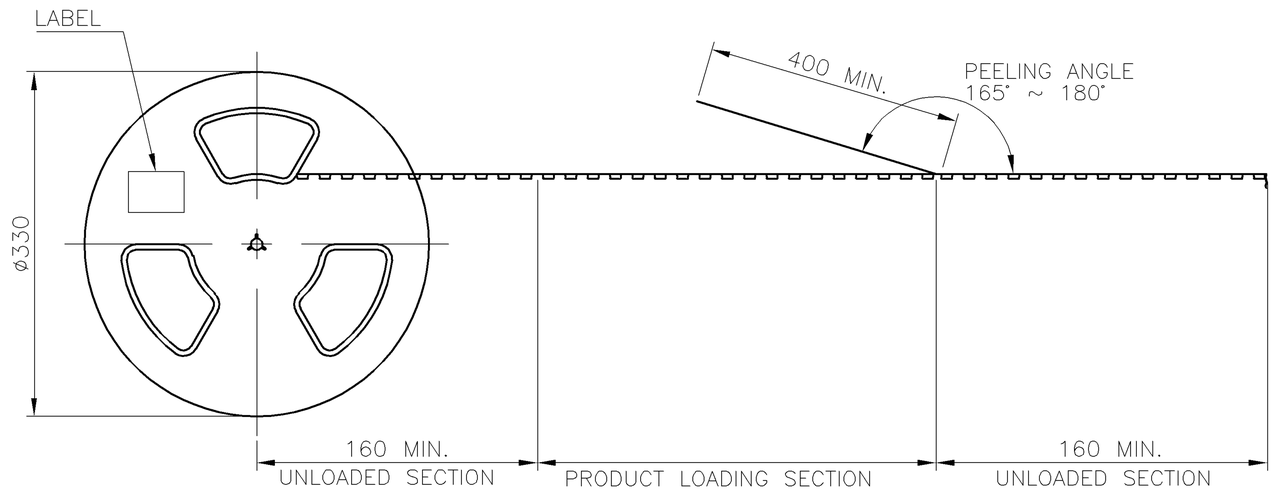

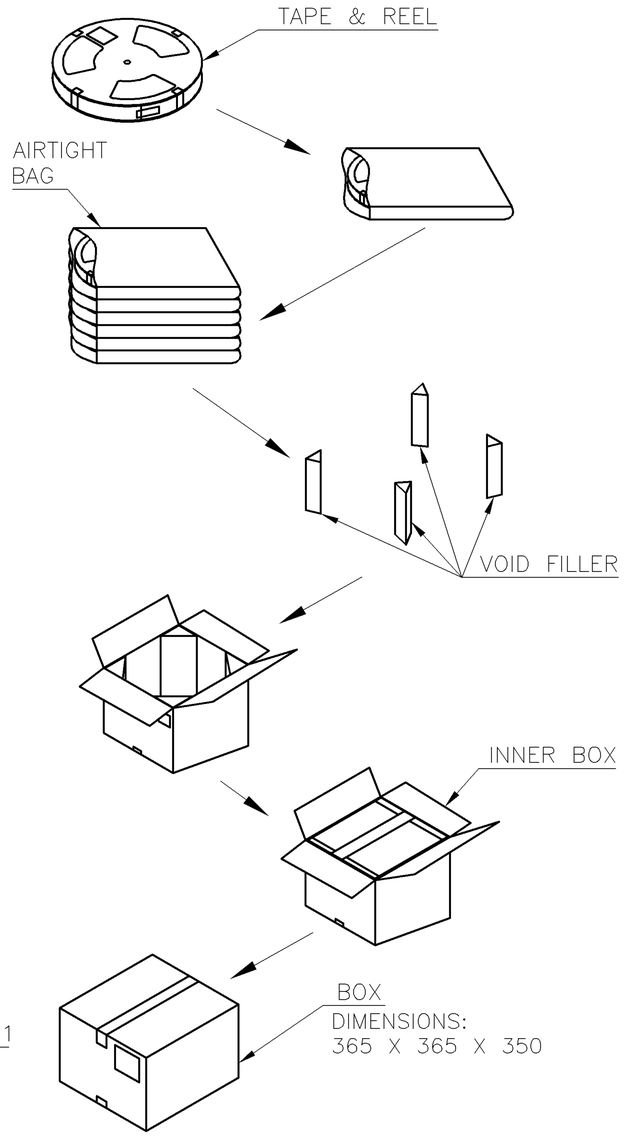

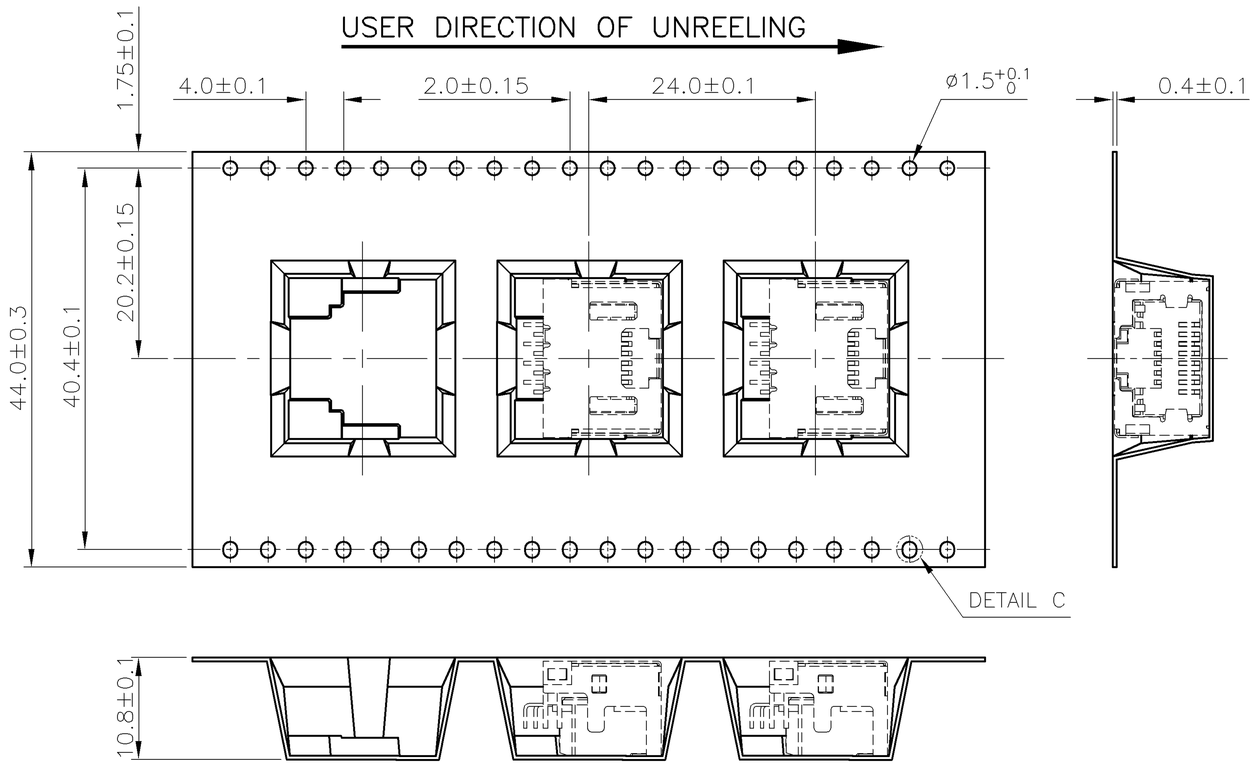

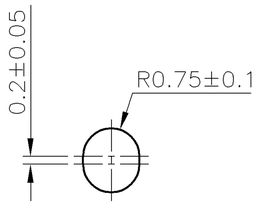

DETAIL C
4:1

7.18 KG	2.68 KG	250	6	1500
GROSS WEIGHT	NET WEIGHT	PCS/ REEL	REEL/ BOX	PCS/ BOX

NOTES:

1. MATERIAL:
   BOX: FIBREBOARD, CORRUGATED, DOUBLE WALL.
   TAPE: POLYSTYRENES, HEAT-RESISTANT TEMPERATURE: 120°C, BLACK COLOR.
   REEL: POLYSTYRENES, HEAT-RESISTANT TEMPERATURE: 70°C, BLUE COLOR.
   AIRTIGHT BAG: POLYETHYLENE, HEAT-RESISTANT TEMPERATURE: 100°C.
2. PEELING STRENGTH: 0.1 ~ 1.3 N (10 ~ 130 GRAMS)
3. PEELING SPEED: 300 mm/min.
4. EACH BAG SHALL BE INCLUDED DESICCANT.

THIS DRAWING IS A CONTROLLED DOCUMENT.

DIMENSIONS: mm

TOLERANCES UNLESS OTHERWISE SPECIFIED:

0 PLC	± –
1 PLC	± 0.3
2 PLC	± 0.2
3 PLC	± 0.15
4 PLC	± –
ANGLES	± 3°

MATERIAL –

FINISH –

DWN –
CHK –
APVD –
PRODUCT SPEC –
APPLICATION SPEC –
WEIGHT –

TE Connectivity

NAME
MODULAR JACK CONNECTOR
RJ45 WITH LED, 8P8C, TAB UP, SHIELDED,
OFFSET, DIP TYPE, H=5.33mm

SIZE	CAGE CODE	DRAWING NO	RESTRICTED TO
A3	00779	C-2041468	—

CUSTOMER DRAWING | SCALE — | SHEET 3 OF 3 | REV B