THIS DRAWING IS UNPUBLISHED. RELEASED FOR PUBLICATION 20
© COPYRIGHT 20 BY - ALL RIGHTS RESERVED.

LOC	DIST
HM	00

REVISIONS

P	LTR	DESCRIPTION	DATE	DWN	APVD
	A	INITIAL RELEASE; ECO-15-004457	25MAR2015	GG	LS

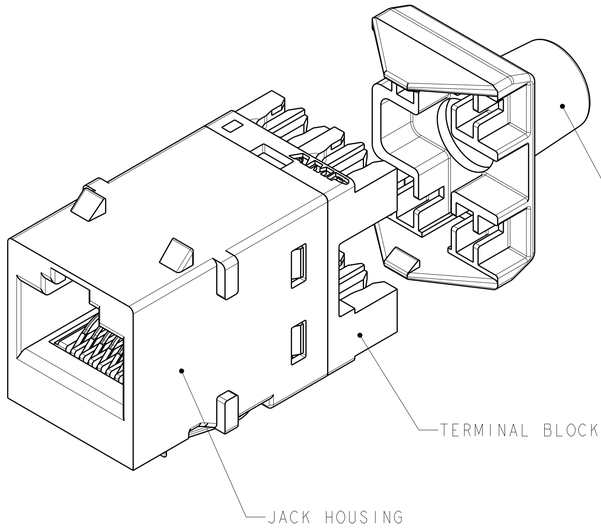

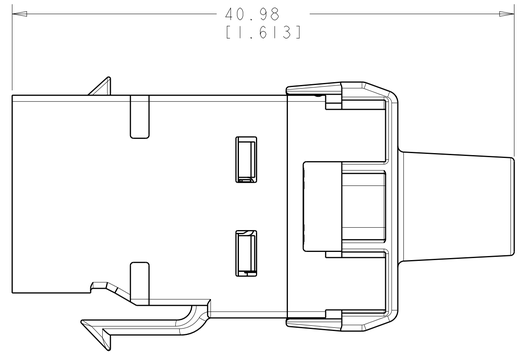

SHOWN WITH STRAIN RELIEF ASSEMBLED

1. MATERIAL: JACK HOUSING - POLYCARBONATE, 94V-0 RATED.
   110 BLOCK AND STRAIN RELIEF- POLYCARBONATE.
   ARRAY TRAY - PBT POLYESTER.
   JACK CONTACTS ARRAY - BERYLLIUM COPPER, PLATED WITH 1.27µm [.000050] MINIMUM THICK GOLD IN LOCALIZED AREA AND 3.81µm [.000150] MINIMUM THICK MATTE TIN IN BOARD INTERFACE AREA OVER 1.27µm [.000050] MINIMUM THICK NICKEL UNDERPLATE.
   IDC TERMINALS - PHOSPHOROUS BRONZE, PLATED WITH 3.81µm [.00015] MINIMUM THICK MATTE TIN OVER 1.27µm [.00005] MINIMUM THICK NICKEL UNDERPLATE.
2. KL 110 JACK WILL TERMINATE 22-24 AWG SOLID AND 24-26 AWG STRANDED CONDUCTORS, 1.27[.050] MAXIMUM INSULATION DIAMETER. JACK WILL ACCEPT CONDUCTORS UP TO 1.45 [.057] BUT REQUIRE THE USE OF A STRAIN RELIEF.
3. CAVITY CONFORMS TO FCC RULES AND REGULATIONS) PART 68 SUBPART F REQUIREMENTS.
4. MOUNTING PANEL THICKNESS 1.22 - 1.55 [.048 - .061].
5. THESE TWO SUGGESTED CUTOUT OPENINGS ARE USED IN TANDEM WITH DUAL FRONT AND BACK CUTOUTS.
6. ONE MODULAR JACK ASSEMBLY AND ONE STRAIN RELIEF PER POLYBAG.
7. USE OF STRAIN RELIEF IS OPTIONAL.
8. REFER TO 408-8858 FOR TERMINATION INSTRUCTIONS USING SL SERIES TOOL TERMINATION. REFER TO 408-8417 FOR TERMINATION INSTRUCTIONS USING 110 PUNCH DOWN TOOL.

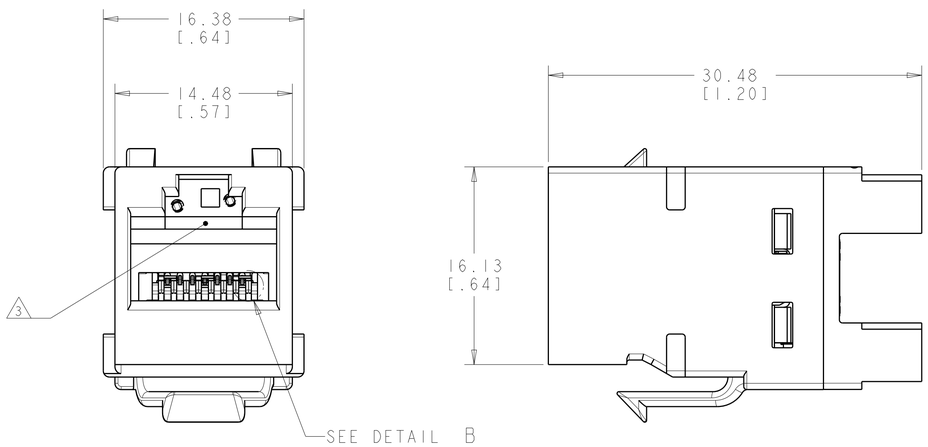

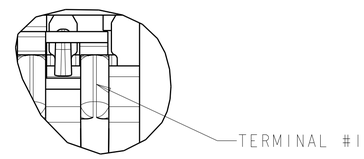

DETAIL B
SCALE 20:1

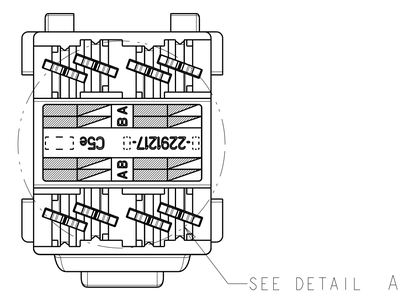

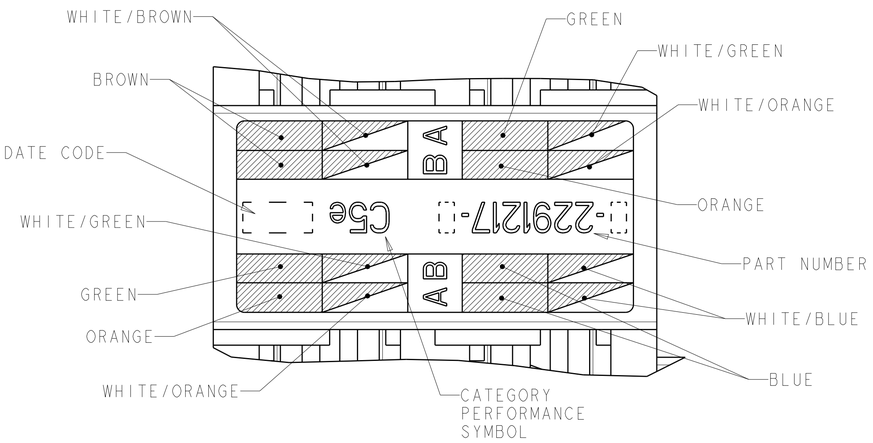

DETAIL A
SCALE 10:1

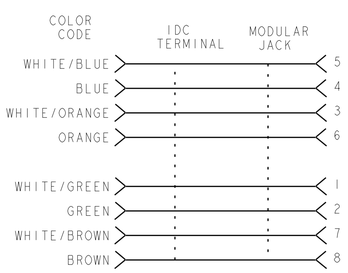

ELECTRICAL SCHEMATIC T568A

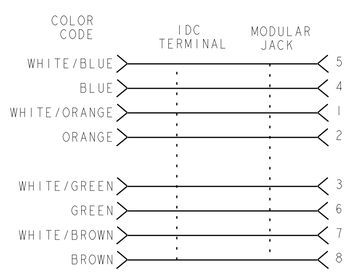

ELECTRICAL SCHEMATIC T568B

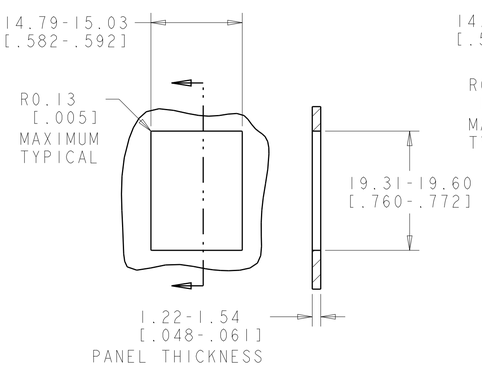

SINGLE PANEL CUTOUT 5

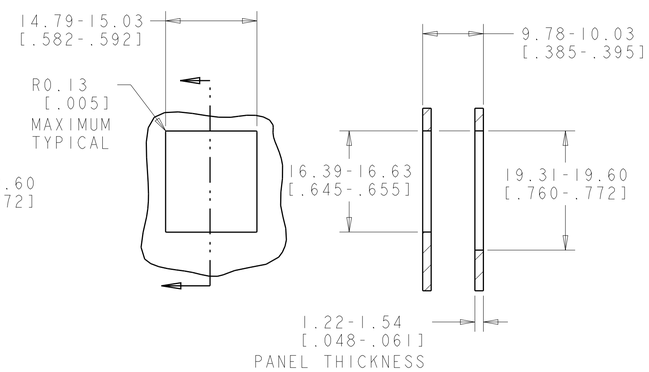

SUGGESTED FLUSH MOUNT PANEL APPLICATION CUTOUT 5

6

PACKAGE	HOUSING COLOR	PART NUMBER
	ALPINE WHITE	1-2291217-3
	ELECTRIC IVORY	1-2291217-1
	VIOLET	1-2291217-0
	GREEN	2291217-9
	YELLOW	2291217-8
	RED	2291217-7
	BLUE	2291217-6
	ORANGE	2291217-5
	NEMA GRAY	2291217-4
	WHITE	2291217-3
	BLACK	2291217-2
	LIGHT ALMOND	2291217-1

THIS DRAWING IS A CONTROLLED DOCUMENT.

DIMENSIONS: MM[INCHES]

TOLERANCES UNLESS OTHERWISE SPECIFIED:
0 PLC ±-
1 PLC ±-
2 PLC ±-
3 PLC ±-
4 PLC ±-
ANGLES ±-

MATERIAL - 1
FINISH - -

DWN G. GARRETT 17MAR2015
CHK L. SCHLOSS 17MAR2015
APVD L. SCHLOSS 17MAR2015

PRODUCT SPEC -
APPLICATION SPEC - 8
WEIGHT -

TE Connectivity

NAME ASSY, CAT 5E, UTP, KL SERIES JACK

SIZE	CAGE CODE	DRAWING NO	RESTRICTED TO
A1	00779	C-2291217	-

Customer Drawing

SCALE	SHEET	OF	REV
4:1	1	1	A