THIS DRAWING IS UNPUBLISHED. RELEASED FOR PUBLICATION -,- .
© COPYRIGHT 2010 BY TYCO ELECTRONICS CORPORATION. ALL RIGHTS RESERVED.

LOC	DIST
DW	—

REVISIONS

P	LTR	DESCRIPTION	DATE	DWN	APVD
	B	REVISED (ECR-12-008080) UPDATED PACKAGE PITCH & WIDTH	02MAY'12	E.L.	W.K.

NOTE:

1. MATERIAL:
   - 1.1 HOUSING: HTN WITH 30% GF, UL94 V-0, BLACK COLOR,
   - 1,2 CONTACTS: PHOSPHOR BRONZE.
   - 1.3 SHELL: BRASS.
   - 1.4 LED MODULAR: EPOXY & STEEL
2. FINISH:
   - 2.1 CONTACT: 0.127um [5u"] MIN. GOLD PLATED ON CONTACT AREA.
     2.032um [80u"] MIN. MATTE-TIN ON SOLDER TAIL.
     1.27um [50u"] MIN. NICKEL UNDERPLATED OVERALL.
   - 2.2 SHELL: 1.27um [50u"] MIN. NICKEL PLATED.
   - 2.3 LED LEADS: 1.27um [50u"] MIN. SILVER,
     0.127um [5u"] MIN. NICKEL,
     0.508um [20u"] MIN. COPPER UNDERPLATED OVERALL.
3. REFLOW SOLDER CAPABLE TO 260°C PER TE SPEC. TEC-109-201, CONDITION B.
4. LOW HALOGEN SPEC:
   - CHLORINE(Cl): 900ppm MAX.
   - BROMINE(Br): 900ppm MAX.
   - CHLORINE (Cl) + BROMINE (Br): 1500 ppm MAX

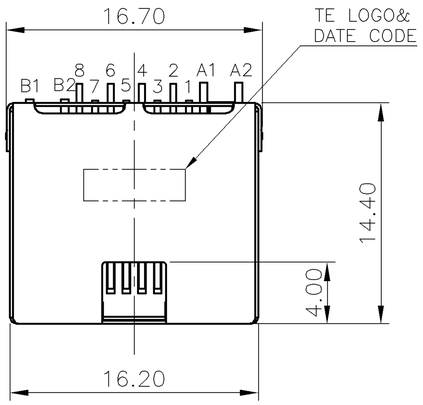

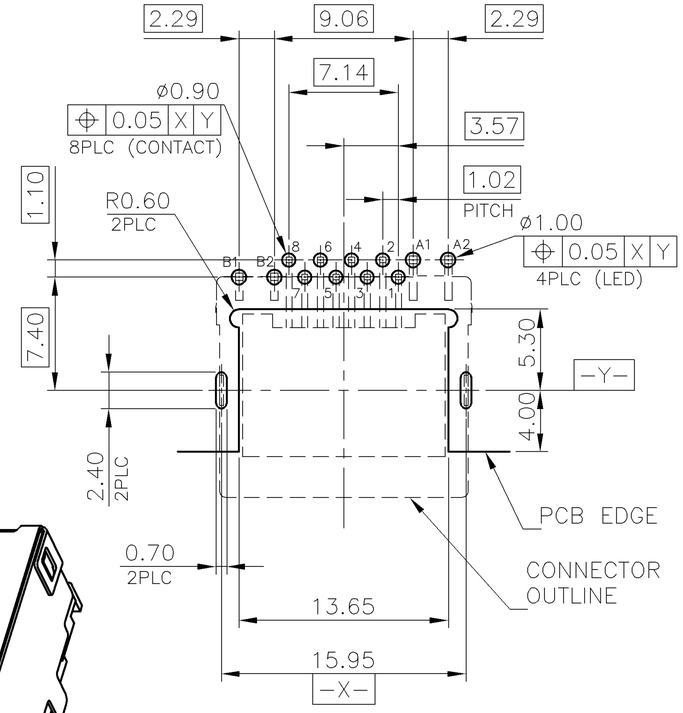

RECOMMENDED PCB LAYOUT (COMPONENT SIDE)
TOLERANCE: ±0.05, THICKNESS: 1.2mm

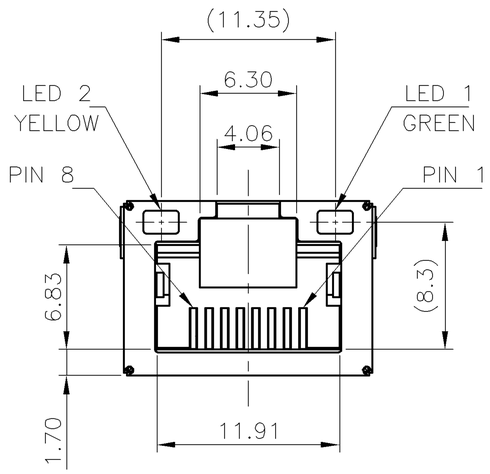

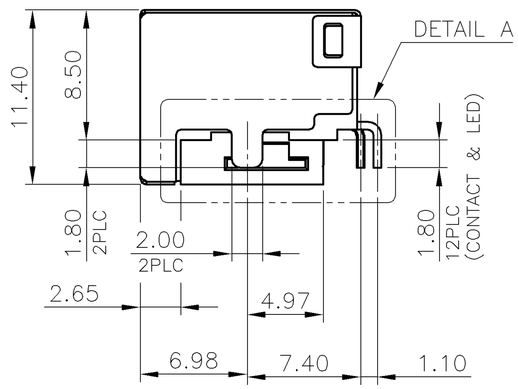

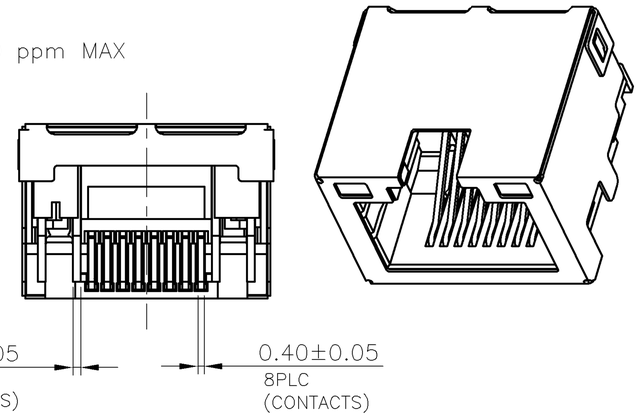

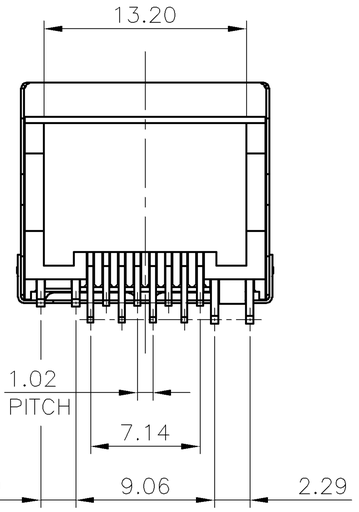

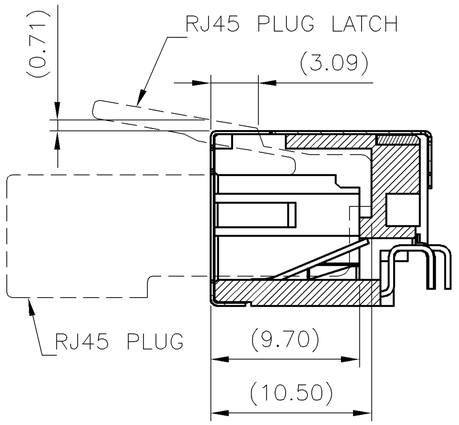

AT MATED RJ45 PLUG ASSY
(REFERENCE)

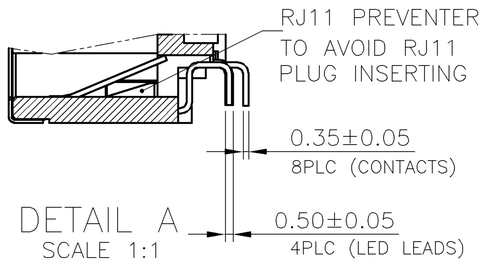

DETAIL A
SCALE 1:1

	LED ELECTRICAL CHARACTERISTIC		
LED #	NODE	COLOR	SYMBOL
LED 1	A1(+) A2(-)	GREEN	A1 ▷| A2
LED 2	B1(+) B2(-)	YELLOW	B1 ▷| B2

YELLOW	GREEN	2041377-1
LED 2	LED 1	PART NUMBER
INDICATOR COLOR		

THIS DRAWING IS A CONTROLLED DOCUMENT.

DIMENSIONS: mm

TOLERANCES UNLESS OTHERWISE SPECIFIED:

0 PLC	± -
1 PLC	± 0.3
2 PLC	± 0.2
3 PLC	± 0.15
4 PLC	± -
ANGLES	± 3°

MATERIAL: SEE NOTE
FINISH: SEE NOTE

DWN	E. LIU	11MAY2011
CHK	S. CHIEN	11MAY2011
APVD	W. KODAMA	11MAY2011
PRODUCT SPEC	108-57660	
APPLICATION SPEC	—	
WEIGHT	2.72 GRAMS	

TE Connectivity

NAME: MODULAR JACK CONNECTOR
RJ45, SIDE ENTRY, SHIELDED, TAB UP
OFFSET, DIP TYPE, H=8.5mm

SIZE	CAGE CODE	DRAWING NO	RESTRICTED TO
A3	00779	C-2041377	—

CUSTOMER DRAWING | SCALE — | SHEET 1 OF 3 | REV B

THIS DRAWING IS UNPUBLISHED. RELEASED FOR PUBLICATION -,- .
© COPYRIGHT 2010 BY TYCO ELECTRONICS CORPORATION. ALL RIGHTS RESERVED.

LOC	DIST
DW	—

REVISIONS

P	LTR	DESCRIPTION	DATE	DWN	APVD
		SEE SHEET 1.			

NOTE:
1. MATERIAL:
   1.1 HOUSING: HTN WITH 30% GF, UL94 V-0, BLACK COLOR,
   1,2 CONTACTS: PHOSPHOR BRONZE.
   1.3 SHELL: BRASS.
2. FINISH:
   2.1 CONTACT: 0.127um [5u"] MIN. GOLD PLATED ON CONTACT AREA.
   2.032um [80u"] MIN. MATTE-TIN ON SOLDER TAIL.
   1.27um [50u"] MIN. NICKEL UNDERPLATED OVERALL.
   2.2 SHELL: 1.27um [50u"] MIN. NICKEL PLATED.
3. REFLOW SOLDER CAPABLE TO 260°C PER TE SPEC. TEC-109-201, CONDITION B.
4. LOW HALOGEN SPEC:
   CHLORINE(Cl): 900ppm MAX.
   BROMINE(Br): 900ppm MAX.
   CHLORINE (Cl) + BROMINE (Br): 1500 ppm MAX

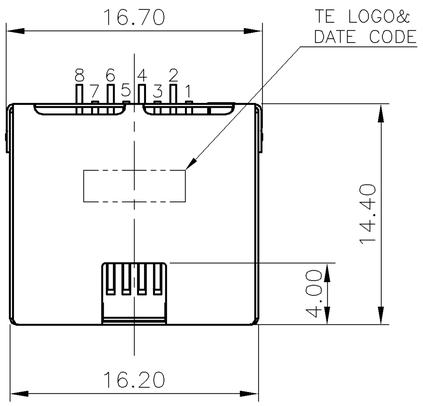

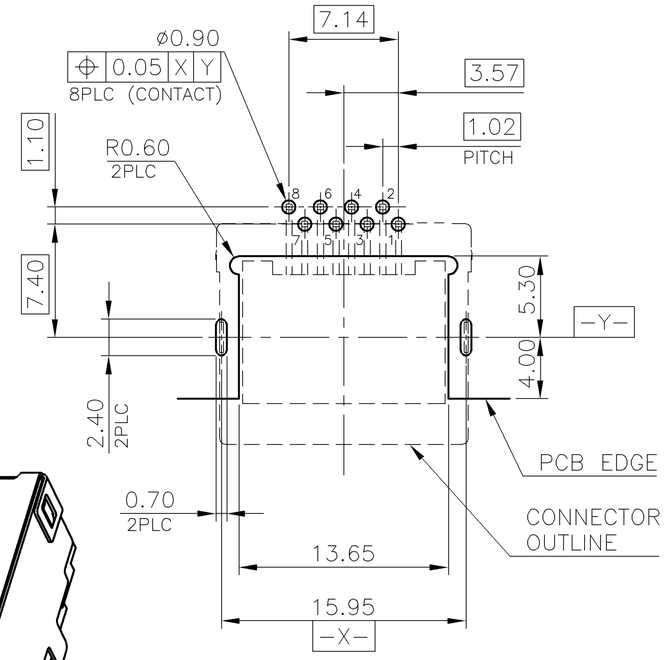

RECOMMENDED PCB LAYOUT (COMPONENT SIDE)
TOLERANCE: ±0.05, THICKNESS: 1.2mm

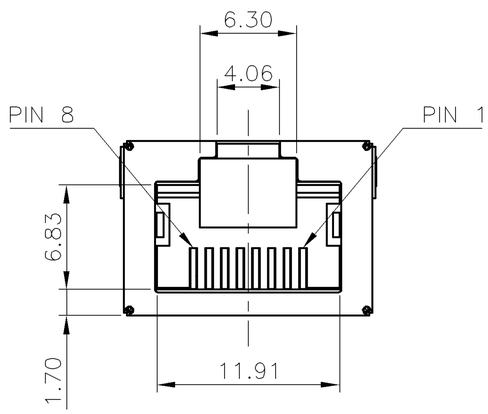

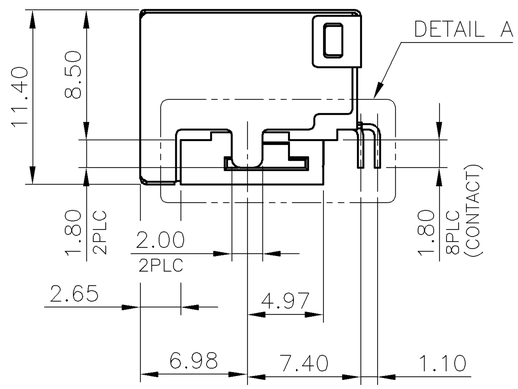

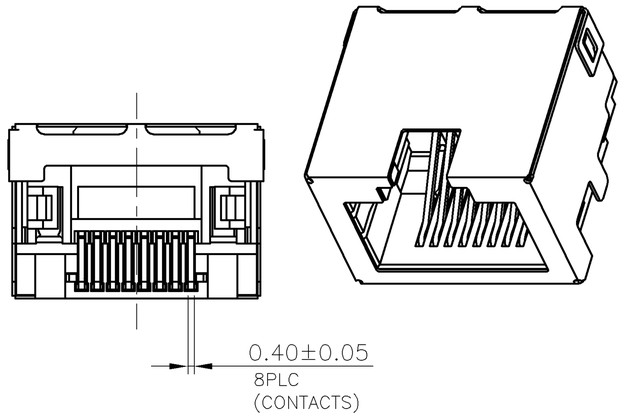

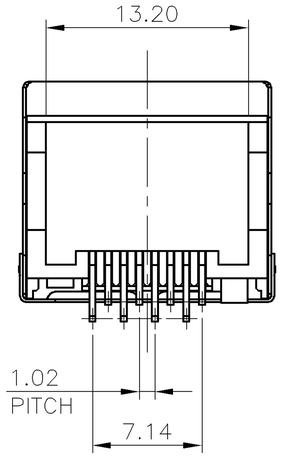

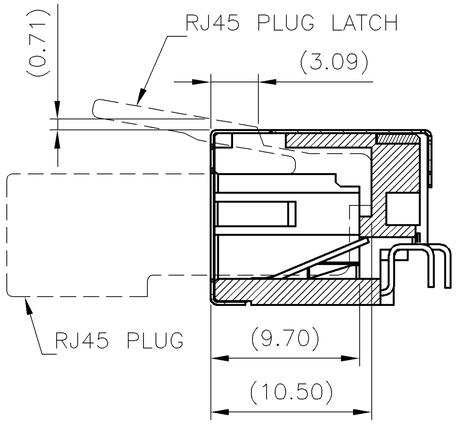

AT MATED RJ45 PLUG ASSY
(REFERENCE)

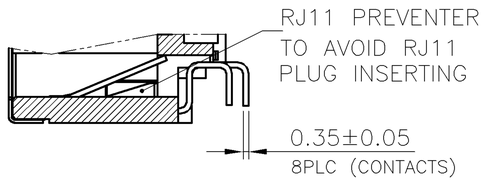

DETAIL A
SCALE 1:1

NA	NA	2041377-2
LED 2	LED 1	PART NUMBER
INDICATOR COLOR		

THIS DRAWING IS A CONTROLLED DOCUMENT.

DIMENSIONS: mm

TOLERANCES UNLESS OTHERWISE SPECIFIED:

0 PLC	± –
1 PLC	± 0.3
2 PLC	± 0.2
3 PLC	± 0.15
4 PLC	± –
ANGLES	± 3°

MATERIAL: SEE NOTE

FINISH: SEE NOTE

DWN –
CHK –
APVD –
PRODUCT SPEC –
APPLICATION SPEC –
WEIGHT 2.46 GRAMS

TE Connectivity

NAME
MODULAR JACK CONNECTOR
RJ45, SIDE ENTRY, SHIELDED, TAB UP
OFFSET, DIP TYPE, H=8.5mm

SIZE	CAGE CODE	DRAWING NO	RESTRICTED TO
A3	00779	C-2041377	—

CUSTOMER DRAWING | SCALE — | SHEET 2 OF 3 | REV B

THIS DRAWING IS UNPUBLISHED. RELEASED FOR PUBLICATION -,- .
© COPYRIGHT 2010 BY TYCO ELECTRONICS CORPORATION. ALL RIGHTS RESERVED.

LOC	DIST
DW	—

REVISIONS

P	LTR	DESCRIPTION	DATE	DWN	APVD
		SEE SHEET 1.			

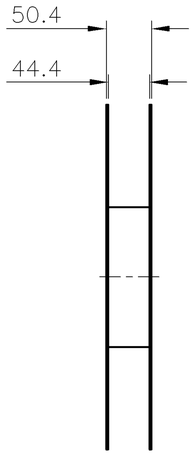

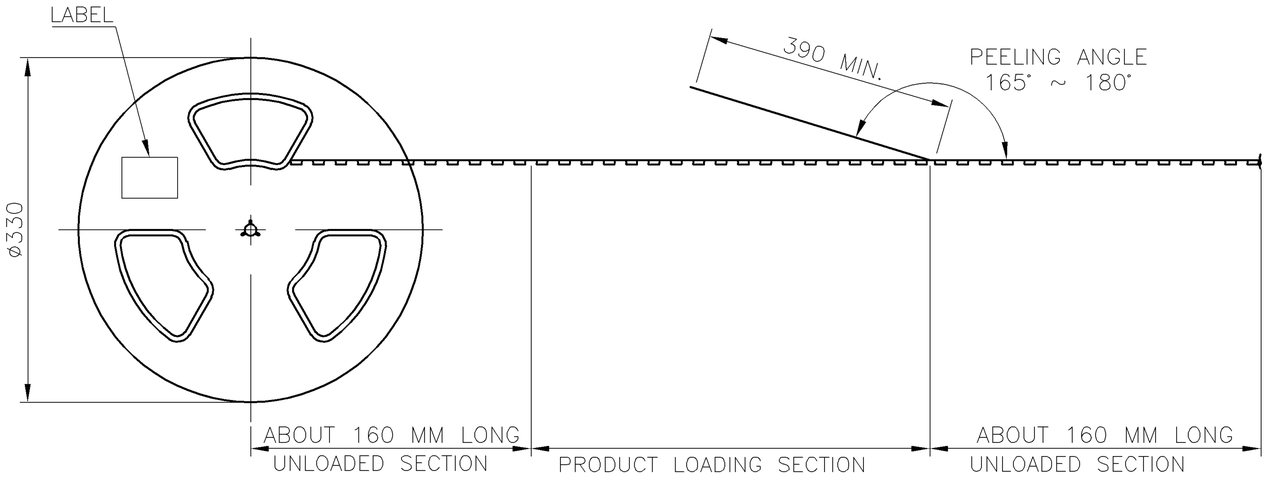

USER DIRECTION OF UNREELING

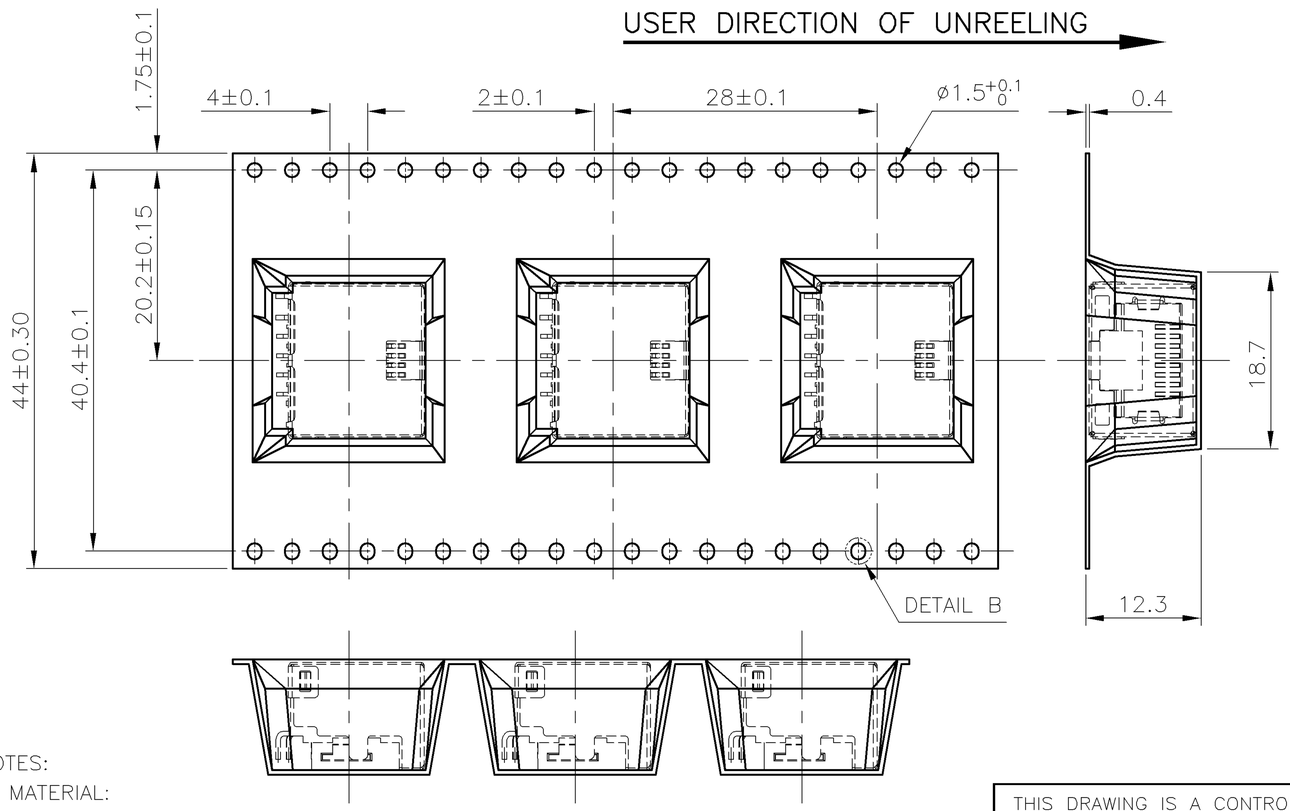

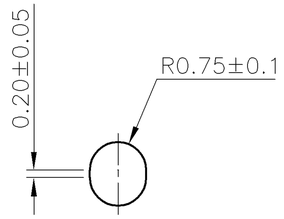

DETAIL B
SCALE 4:1

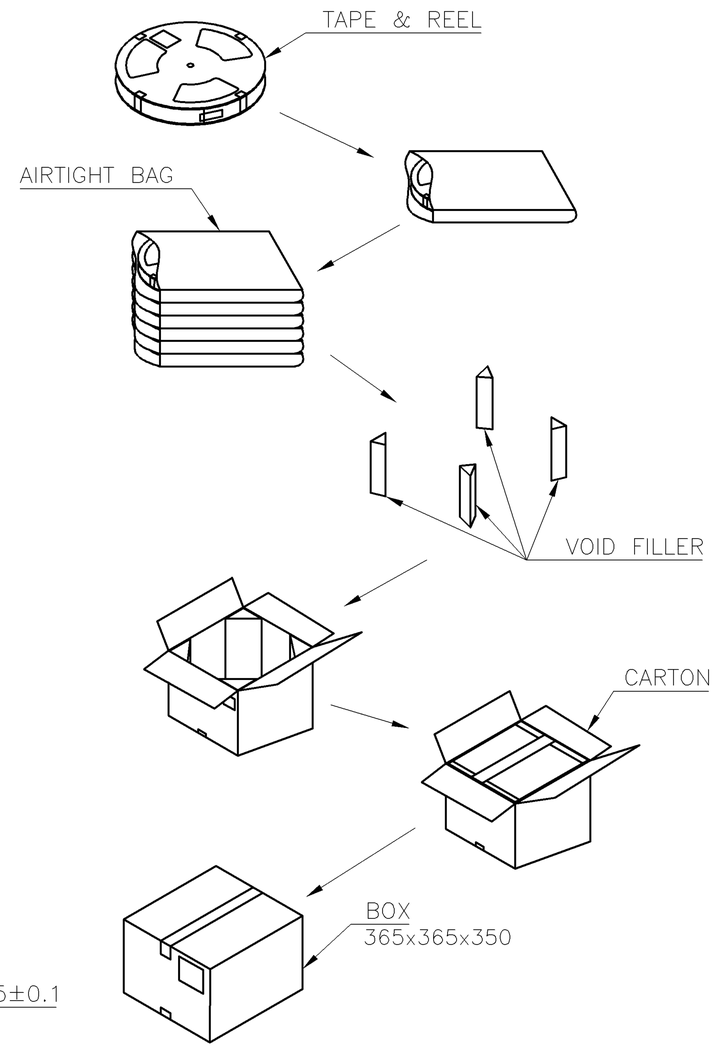

PCS /REEL	REELS /BOX	PCS /BOX	GROSS WEIGHT	NET WEIGHT	PART NUMBER
180	6	1080	7.3KG	2.67KG	2041377-2
			7.5KG	2.94KG	2041377-1

NOTES:
1. MATERIAL:
   BOX: FIBREBOARD, CORRUGATED, DOUBLE WALL.
   COVER TAPE: PET, HEAT-RESISTANT TEMPERATURE: 100°C, TRANSPARENT COLOR.
   CARRIER TAPE: POLYSTYRENES, HEAT-RESISTANT TEMPERATURE: 120°C, BLACK COLOR.
   REEL: POLYSTYRENES, HEAT-RESISTANT TEMPERATURE: 70°C, BLUE COLOR.
   AIRTIGHT BAG: POLYETHYLENE, HEAT-RESISTANT TEMPERATURE: 100°C.
2. PEELING STRENGTH: 0.1 ~ 1.3 N (10 ~ 130 GRAMS)
3. PEELING SPEED: 300 mm/min.
4. EACH BAG SHALL BE INCLUDED DESICCANT.

THIS DRAWING IS A CONTROLLED DOCUMENT.

DIMENSIONS: mm

TOLERANCES UNLESS OTHERWISE SPECIFIED:

0 PLC	± –
1 PLC	± 0.3
2 PLC	± 0.2
3 PLC	± 0.15
4 PLC	± –
ANGLES	± 3°

MATERIAL –

FINISH –

DWN –
CHK –
APVD –
PRODUCT SPEC –
APPLICATION SPEC –
WEIGHT –

TE Connectivity

NAME
MODULAR JACK CONNECTOR
RJ45, SIDE ENTRY, SHIELDED, TAB UP
OFFSET, DIP TYPE, H=8.5mm

SIZE	CAGE CODE	DRAWING NO	RESTRICTED TO
A3	00779	C-2041377	—

CUSTOMER DRAWING | SCALE — | SHEET 3 OF 3 | REV B