MICRO SWITCH
a Honeywell Division
FED. MFG. CODE 91929

SWITCH – TOGGLE ABOVE PANEL MOUNT

CATALOG LISTING
2TP118 SERIES
CHART 1

THIS DRAWING COVERS A PROPRIETARY ITEM AND IS THE PROPERTY OF MICRO SWITCH. A DIVISION OF HONEYWELL. THIS DRAWING IS NOT TO BE COPIED OR USED WITHOUT THE APPROVAL OF MICRO SWITCH

CATALOG LISTING	CIRCUIT MADE WITH BUTTON DEPRESSED ON △4			ELECTRICAL DATA
	LUG SIDE (1–2, 4–5)	CENTER (1–2, 4–5)	OPPOSITE LUG (2–3, 5–6)	
2TP118–1	ON	OFF	ON	L191 15A 125, 250, 277 VAC 1/2HP 125 VAC 1HP 250, 277 VAC 5A 125 VAC "L"
2TP118–2	OFF	NONE	ON	
2TP118–3	ON	NONE	ON	
2TP118–21	NONE	OFF	ON	
2TP118–31	NONE	ON	ON	
2TP118–4	MOM OFF	NONE	ON	L192 10A 125, 250, 277 VAC 1/4HP 125 VAC, 1/2HP 250, 277 VAC 3A 125 VAC "L"
2TP118–5	MOM ON	OFF	ON	
2TP118–6	MOM ON	NONE	OFF	
2TP118–7	MOM ON	OFF	MOM ON	
2TP118–8	MOM ON	NONE	ON	
2TP118–51	NONE	ON	MOM ON	
2TP118–61	MOM ON	OFF	NONE	

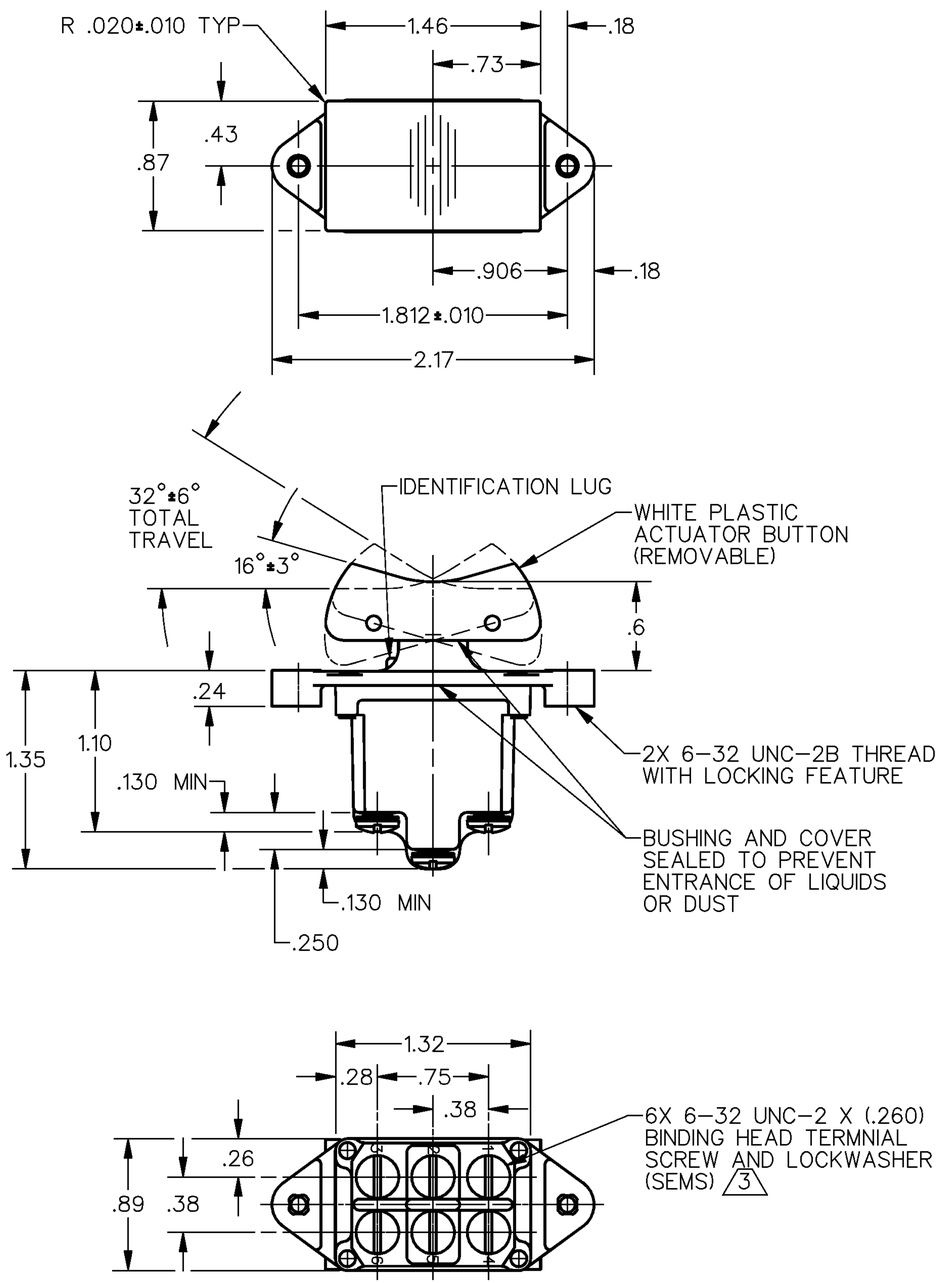

NOTES
1 – SWITCH WILL WITHSTAND TEMPERATURE OF 160°F
2 – MICRO SWITCH CAT. LIST. MARKED ON SIDE OF SWITCH
△3 SCREWS FURNISHED UNASSEMBLED
△4 APPLIES ONLY TO "ON" AND "MOMENTARY ON" POSITIONS

THIRD ANGLE PROJECTION
SCALE FULL
DO NOT SCALE PRINT

UNLESS OTHERWISE SPECIFIED TOLERANCES ARE		
ONE PLACE	(.0)	±.030
TWO PLACE	(.00)	±.015
THREE PLACE	(.000)	±.005
ANGLES		±

WEIGHT .13 LB EST

ANSI Y14.5M–1982 APPLIES

CATALOG LISTING
2TP118 SERIES CHART 1
PAGE 1 OF 1
ISSUE M 3
REPLACES
RELEASE NO. PR–22016

REVISIONS
A CO–82794 LJK JUL 96
B CO–94413 J J A 8 OCT 99

DRAWN	CHECK	CHECK	TSM	CHECK	CHECK
LJK	12 FEB 96		13 FEB 96		

FORMTEK