MICRO SWITCH
FREEPORT ILLINOIS U S A
A DIVISION OF HONEYWELL
FED. MFG. CODE 81929

SWITCH - ENCLOSED

CATALOG LISTING
21EN380-1B

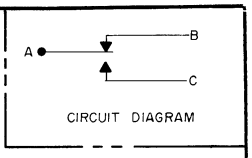

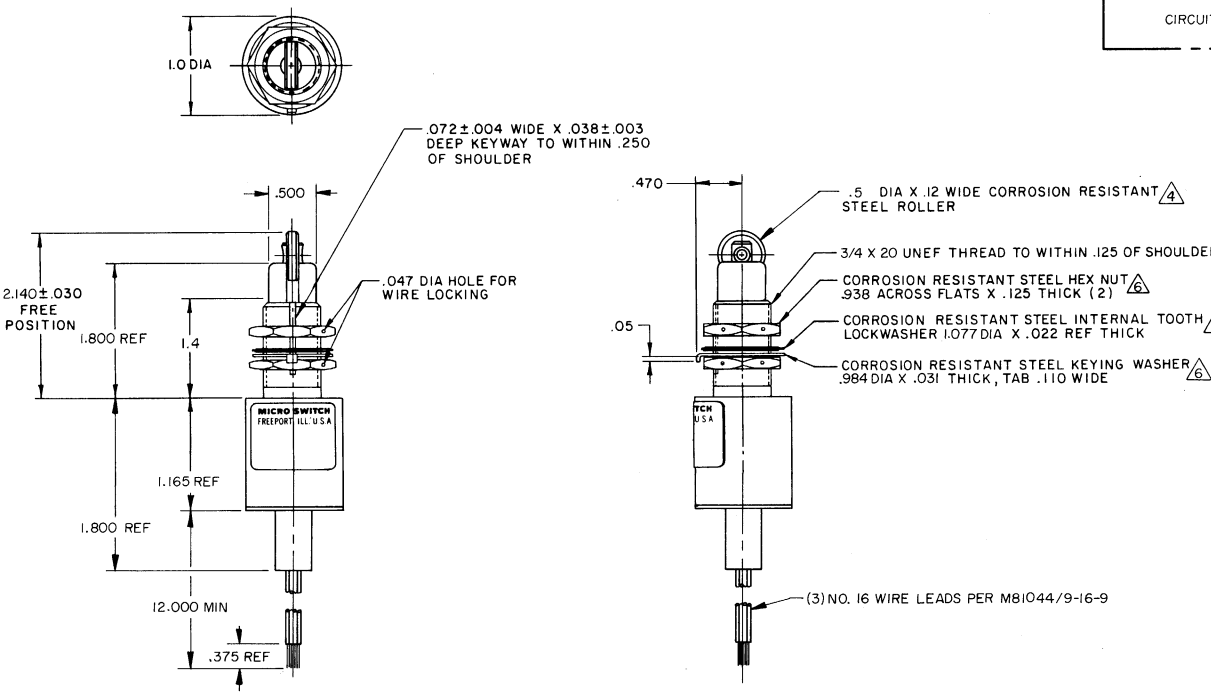

CHARACTERISTICS	ELECTRICAL DATA
OPERATING FORCE — — — — — — 6-12 LB	CONTACT ARRANGEMENT: S P N C
FULL OVERTRAVEL FORCE — — — 30 LB MAX	
RELEASE FORCE — — — — — — — 4 LB MIN	
PRETRAVEL — — — — — — — — .040 MAX	
DIFFERENTIAL TRAVEL — — — — .020 MAX	
OVERTRAVEL — — — — — — — — .250 MIN	

LOAD	28 VDC SEA LEVEL	28 VDC 50,000 FT.
RES	7	4
IND	4	2.5
MOTOR	4	
LAMP		

THIS DRAWING COVERS A PROPRIETARY ITEM AND IS THE PROPERTY OF MICRO SWITCH, A DIVISION OF HONEYWELL. THIS DRAWING IS NOT TO BE COPIED OR USED WITHOUT THE APPROVAL OF MICRO SWITCH.

SCALE FULL
DO NOT SCALE PRINT
TOLERANCES: APPLY TO DESIGN UNITS. CONVERSIONS ARE ONLY FOR REFERENCE. UNLESS NOTED, TOLERANCES ARE ±
DESIGN UNITS: BI METRIC / US CUSTOMARY
THIRD ANGLE PROJECTION
WEIGHT 13.0 OZ MAX

NOTES
1 - CORROSION RESISTANT STEEL ENCLOSURE
2 - SWITCH SEALED PER MIL-S-8805 SYMBOL 4
3 - CIRCUIT DIAGRAM, CATALOG LISTING AND DATE CODE ARE SHOWN ON NAMEPLATE
4 - FIXED ROLLER ORIENTATION IN LINE WITH KEYWAY AND CABLE
5 - COINCIDENCE OF OPERATE AND RELEASE POINT .010
6 - HARDWARE MAY BE PACKAGED UNASSEMBLED PER MIL-S-8805

DRAWING NUMBER: M 21EN380-1B
ISSUE: 2
RELEASE NO. PR-17173
REPLACES
REVISIONS: A PR17173 TSK 20 MAR 89
DRAWN: TSK 20 MAR 89
CHECK: DAW 21 MAR 89
FO-5281-B

Downloaded from Elcodis.com electronic components distributor