MICRO SWITCH
a Honeywell Division
FED.MFG.CODE 91929

SWITCH–BASIC

CATALOG LISTING
2MN1–L

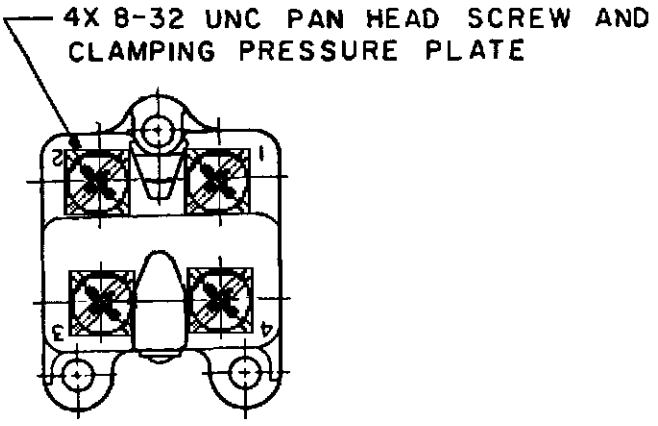

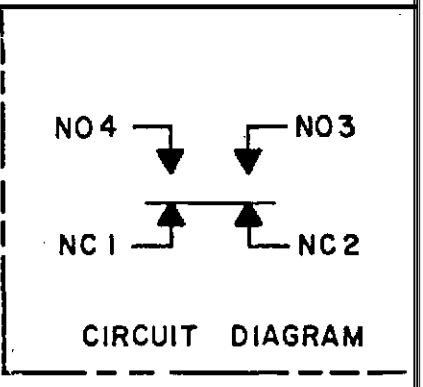

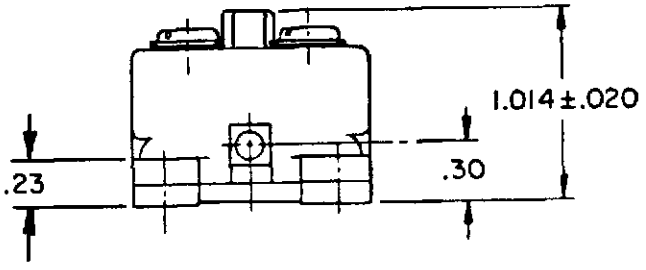

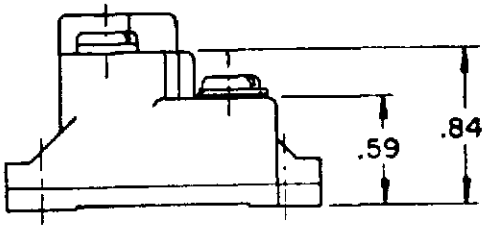

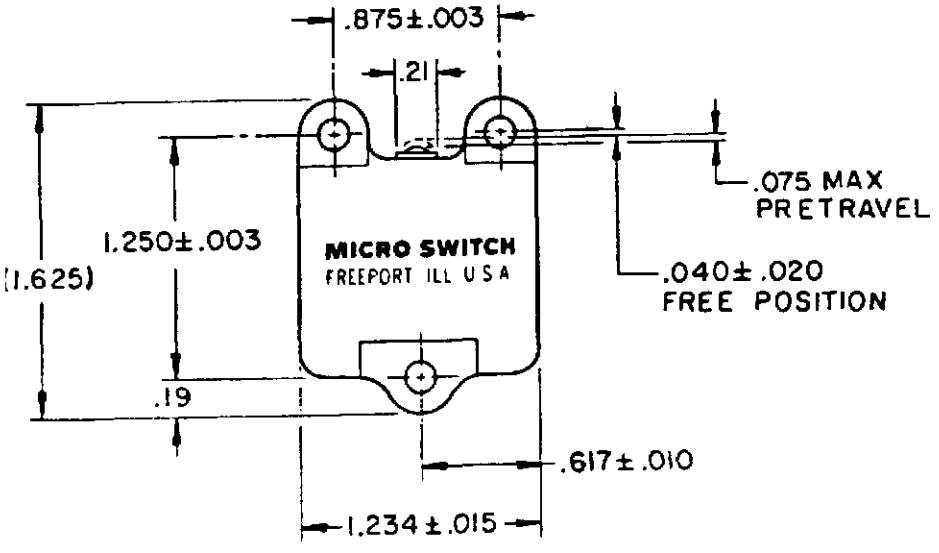

NOTE
1 - MOUNTING HOLES WILL ACCEPT NO. 4 SCREWS ON .875±.003 AND 1.250±.003 CENTERS

THIS DRAWING COVERS A PROPRIETARY ITEM AND IS THE PROPERTY OF MICRO SWITCH, A DIVISION OF HONEYWELL. THIS DRAWING IS NOT TO BE COPIED OR USED WITHOUT THE APPROVAL OF MICRO SWITCH.

THIRD ANGLE PROJECTION

CHARACTERISTICS	ELECTRICAL DATA	SCALE FULL — DO NOT SCALE PRINT
OPERATING FORCE ---------- 16-24 OZ	CONTACT ARRANGEMENT (SEE CIRCUIT DIAGRAM)	UNLESS OTHERWISE SPECIFIED TOLERANCES ARE
RELEASE FORCE ---------- 10 OZ MIN	L98 10A 125, 250 OR 480 VAC; 1/2HP 125 VAC, 1HP 250 VAC; 0.8A 125 VDC, 0.4A 250 VDC	ONE PLACE (.0) ±.030
DIFFERENTIAL TRAVEL ------- .011–.020		TWO PLACE (.00) ±.015
OVERTRAVEL ---------- .017 MIN		THREE PLACE (.000) ±.005
RELEASE TRAVEL ---------- .022 MIN		ANGLES ±
		WEIGHT

CATALOG LISTING 2MN1–L
PAGE 1 OF 1
ISSUE 10 M
REPLACES
RELEASE NO. PR-511
CHECK
REVISIONS
A C076997 GJW 20 APR 95
B C094359 DLT 20 APR 99
CHECK
8 MAY 95 JAF
CHECK
20 APR 95 GJW
DRAWN
FORMTEK