THIS DRAWING IS UNPUBLISHED. RELEASED FOR PUBLICATION -.-- -
© COPYRIGHT - BY TYCO ELECTRONICS CORPORATION. ALL RIGHTS RESERVED.

UOC	DIST
AD	14

REVISIONS

P	LTR	DESCRIPTION	DATE	DRN	APVD
	B	REV PER EC 0515-0044-05	27JUN05	RG	MP
	B1	REVISED PER ECO-10-000444	19JAN10	KK	HMR

1. FINISH: 1.27µm[.000050] MIN THICK NICKEL PLATE ALL OVER. 0.76µm [.000030]MIN THICK GOLD PLATE OVER NICKEL IN CONTACT AREA AND 2.54µm[.000100] MIN THICK TIN PLATE OVER NICKEL ON SOLDERTAIL.
2. THIS REQUIREMENT IS BASED ON A 0.82µm[.032] MAXIMUM EFFECTIVE DIAMETER (DIAGONAL) OF THE SOLDERTAILS.
3. DROP DOWNS(SKIRTS) RECOMMENDED TO MINIMIZE POTENTIAL OF IMPROPER MATING OF THE BOARD TO THE CONNECTOR.
4. FINISH: 1.27µm[.000050] MIN THICK TIN.
5. DETAILS OF LONGER METAL HOLD-DOWN MAY VARY FROM THOSE SHOWN.
6. ALTERNATE PATTERN APPLIES.
7. OBSOLETE PARTS: OBSOLETE CIS STREAMLINING PER D.RENAUD/D.SINISI

	RC	RB	RA	LC	LB	LA	W	V	U	T	S	L	NO.OF DUAL POSN	PART NUMBER
SUPERCEDED BY 3-5145090-7	58.496 [2.303]	57.28-57.53 [2.255-2.265]	40	47.320 [1.863]	46.10-46.36 [1.815-1.825]	31	108.36 [4.266]	57.58-57.73 [2.267-2.273]	46.41-46.56 [1.827-1.833]	46.482 [1.830]	4.44-4.95 [.175-.195]	2.92-3.43 [.115-.135]	73	~~3-5145090-8~~ (6)
												2.29-2.79 [.090-.110]		~~3-5145090-7~~ (6)
(7) OBSOLETE														
	97.866 [3.853]	96.65-96.90 [3.805-3.815]	71	80.340 [3.163]	79.12-79.38 [3.115-3.125]	57	180.75 [7.116]	96.95-97.10 [3.817-3.823]	79.43-79.58 [3.127-3.133]	79.502 [3.130]	4.44-4.95 [.175-.195]	3.68-4.19 [.145-.165]	130	3-5145090-5
(7) OBSOLETE												2.92-3.43 [.115-.135]		~~3-5145090-4~~
											4.44-4.95 [.175-.195]	2.29-2.79 [.090-.110]		3-5145090-3
	92.786 [3.653]	91.57-91.82 [3.605-3.615]	67	72.720 [2.863]	71.50-71.76 [2.815-2.825]	51	168.05 [6.616]	91.87-92.02 [3.617-3.623]	71.81-71.96 [2.827-2.833]	71.882 [2.830]	4.44-4.95 [.175-.195]	3.68-4.19 [.145-.165]	120	3-5145090-1
(7) OBSOLETE												2.92-3.43 [.115-.135]		~~3-5145090-0~~
(7) OBSOLETE											4.44-4.95 [.175-.195]	2.29-2.79 [.090-.110]		~~2-5145090-9~~
	85.166 [3.353]	83.95-84.20 [3.305-3.315]	61	67.640 [2.663]	66.42-66.68 [2.615-2.625]	47	155.35 [6.116]	84.25-84.40 [3.317-3.323]	66.73-66.88 [2.627-2.633]	66.802 [2.630]	4.44-4.95 [.175-.195]	4.57-5.08 [.180-.200]	110	2-5145090-8
												3.68-4.19 [.145-.165]		2-5145090-7
											4.44-4.95 [.175-.195]	2.92-3.43 [.115-.135]		2-5145090-6
(7) OBSOLETE												2.29-2.79 [.090-.110]		~~2-5145090-5~~
	77.546 [3.053]	76.33-76.58 [3.005-3.015]	55	62.560 [2.463]	61.34-61.60 [2.415-2.425]	43	142.65 [5.616]	76.63-76.78 [3.017-3.023]	61.65-61.80 [2.427-2.433]	61.722 [2.430]	4.44-4.95 [.175-.195]	2.92-3.43 [.115-.135]	100	2-5145090-2
SUPERCEDED BY 2-5145090-2												2.29-2.79 [.090-.110]		~~2-5145090-1~~
(7) OBSOLETE														
	69.926 [2.753]	68.71-68.96 [2.705-2.715]	49	57.480 [2.263]	56.26-56.52 [2.215-2.225]	39	129.95 [5.116]	69.01-69.16 [2.717-2.723]	56.57-56.72 [2.227-2.233]	56.642 [2.230]	4.44-4.95 [.175-.195]	3.68-4.19 [.145-.165]	90	~~1-5145090-9~~
(7) OBSOLETE												2.92-3.43 [.115-.135]		~~1-5145090-8~~
(7) OBSOLETE											4.44-4.95 [.175-.195]	2.29-2.79 [.090-.110]		~~1-5145090-7~~
(7) OBSOLETE														
	62.306 [2.453]	61.09-61.34 [2.405-2.415]	43	52.400 [2.063]	51.18-51.44 [2.015-2.025]	35	117.25 [4.616]	61.39-61.54 [2.417-2.423]	51.49-51.64 [2.027-2.033]	51.562 [2.030]	4.44-4.95 [.175-.195]	2.92-3.43 [.115-.135]	80	~~1-5145090-4~~
(7) OBSOLETE												2.29-2.79 [.090-.110]		~~1-5145090-3~~
SUPERCEDED BY 5145090-9														
	57.226 [2.253]	56.01-56.26 [2.205-2.215]	39	44.780 [1.763]	43.56-43.82 [1.715-1.725]	29	104.55 [4.116]	56.31-56.46 [2.217-2.223]	43.87-44.02 [1.727-1.733]	43.942 [1.730]	4.44-4.95 [.175-.195]	2.92-3.43 [.115-.135]	70	~~1-5145090-0~~
(7) OBSOLETE												2.29-2.79 [.090-.110]		~~5145090-9~~
(7) OBSOLETE												4.57-5.08 [.180-.200]		~~5145090-8~~
	49.606 [1.953]	48.39-48.64 [1.905-1.915]	33	39.700 [1.563]	38.48-38.74 [1.515-1.525]	25	91.85 [3.616]	48.69-48.84 [1.917-1.923]	38.79-38.94 [1.527-1.533]	38.862 [1.530]	4.44-4.95 [.175-.195]	2.92-3.43 [.115-.135]	60	5145090-6
												2.29-2.79 [.090-.110]		5145090-5
SUPERCEDED BY 5145090-1														
	41.986 [1.653]	40.77-41.02 [1.605-1.615]	27	34.620 [1.363]	33.40-33.66 [1.315-1.325]	21	79.15 [3.116]	41.07-41.22 [1.617-1.623]	33.71-33.86 [1.327-1.333]	33.782 [1.330]	4.44-4.95 [.175-.195]	2.92-3.43 [.115-.135]	50	~~5145090-2~~
												2.29-2.79 [.090-.110]		5145090-1

THIS DRAWING IS A CONTROLLED DOCUMENT.

DIMENSIONS: INCHES

TOLERANCE UNLESS OTHERWISE SPECIFIED: 0 PLC ± - ; 1 PLC ± - ; 2 PLC ± - ; 3 PLC ± .13 [.005] ; 4 PLC ± - ; ANGLES ± 2°

MATERIAL -

FINISH (1) (4)

DRN A. FERNANDEZ-DOCKS 12-20-04
CHK M. PERCHERKE 12-20-04
APVD M. PERCHERKE 12-20-04
PRODUCT SPEC 108-1406
APPLICATION SPEC 114-11007
WEIGHT -
CUSTOMER DRAWING

Tyco Electronics Corporation
Harrisburg, Pa 17105-3608

NAME CONNECTOR ASSEMBLY, DUAL POSN, HIGH SPEED, STANDARD EDGE

SIZE A1 CAGE CODE 00779 DRAWING NO C-5145090 RESTRICTED TO -

SCALE 1:1 SHEET 1 OF 3 REV B1

Downloaded from Elcodis.com electronic components distributor

THIS DRAWING IS UNPUBLISHED. RELEASED FOR PUBLICATION -.-.-
© COPYRIGHT - BY TYCO ELECTRONICS CORPORATION. ALL RIGHTS RESERVED.

UOC	DIST
AD	14

REVISIONS

P	LTR	DESCRIPTION	DATE	DWN	APVD
—		SEE SHEET 1	—	—	—

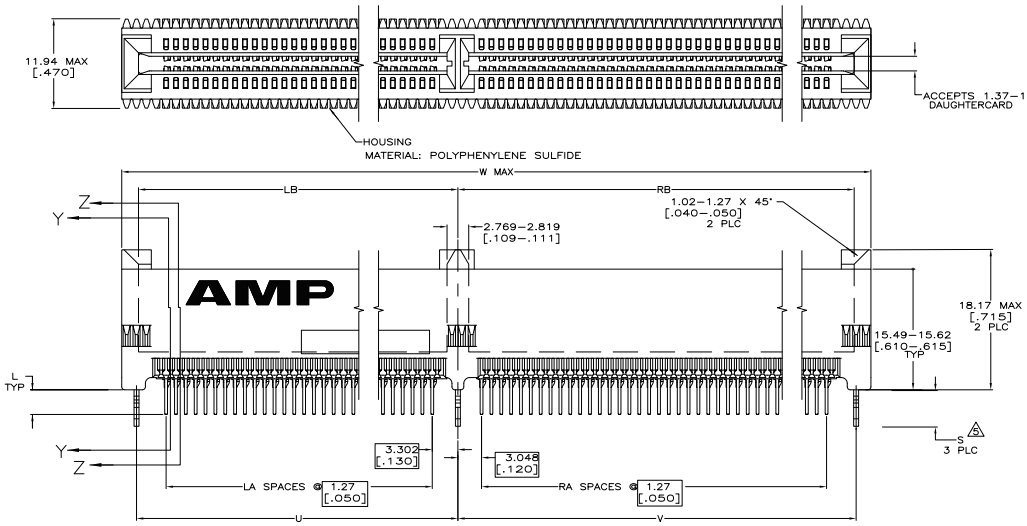

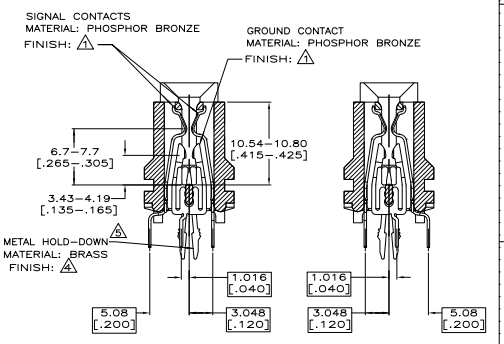

SECTION Y–Y
ONLY CONTACTS AT SECTION SHOWN FOR CLARITY
TYP

SECTION Z–Z
ONLY CONTACTS AT SECTION SHOWN FOR CLARITY
TYP

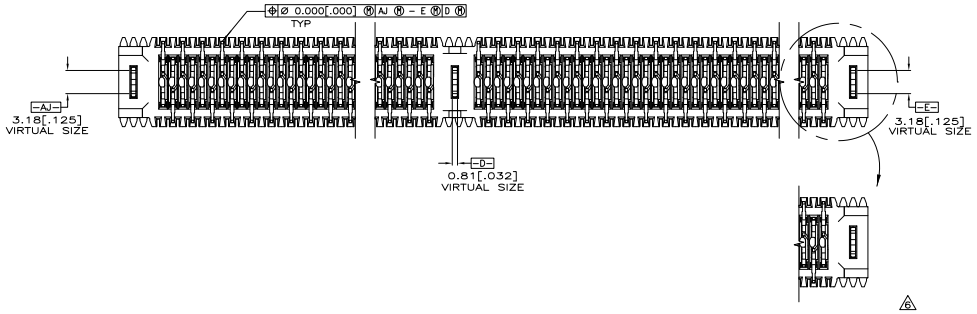

ALTERNATIVE PATTERN

THIS DRAWING IS A CONTROLLED DOCUMENT.

DIMENSIONS: INCHES

TOLERANCE UNLESS OTHERWISE SPECIFIED: 0 PLC ± – ; 1 PLC ± – ; 2 PLC ± .13 [.005] ; 3 PLC ± – ; 4 PLC ± – ; ANGLES ± 2°

MATERIAL –

FINISH –

DWN 12-20-04 A. FERNANDEZ-DOCKS
CHK 12-20-04 M. PERCHERKE
APVD 12-20-04 M. PERCHERKE
PRODUCT SPEC –
APPLICATION SPEC –
WEIGHT –

Tyco Electronics Corporation
Harrisburg, Pa 17105-3608

NAME CONNECTOR ASSEMBLY, DUAL POSN, HIGH SPEED, STANDARD EDGE

SIZE A1 | CAGE CODE 00779 | DRAWING NO C-5145090 | RESTRICTED TO –

CUSTOMER DRAWING | SCALE 1:1 | SHEET 2 OF 3 | REV B1

AMP 4805 REV 31MR2000

27JUN05 11:20am us021428 H:\autocad\5145090_2c_B.dwg

Downloaded from Elcodis.com electronic components distributor

THIS DRAWING IS UNPUBLISHED. RELEASED FOR PUBLICATION -.-.-
© COPYRIGHT - BY TYCO ELECTRONICS CORPORATION. ALL RIGHTS RESERVED.

UOC	DIST
AD	14

REVISIONS

P	LTR	DESCRIPTION	DATE	DWN	APVD
	—	SEE SHEET 1	—	—	—

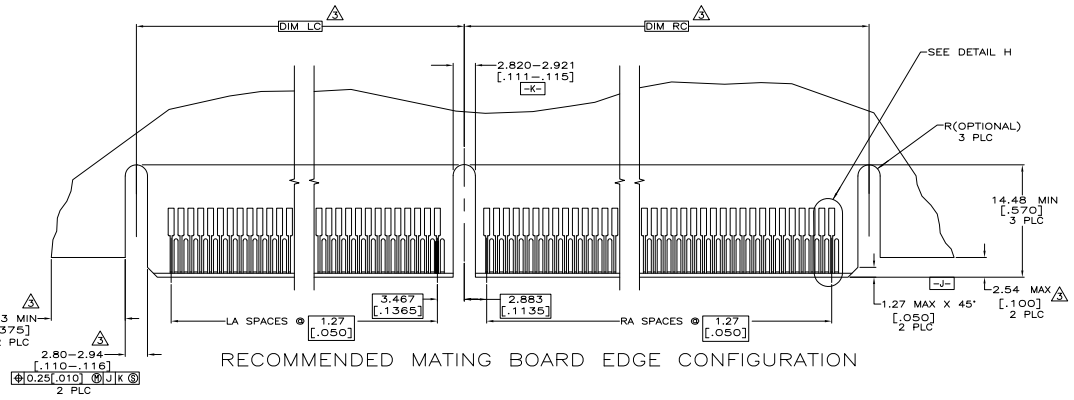

RECOMMENDED MATING BOARD EDGE CONFIGURATION

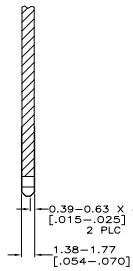

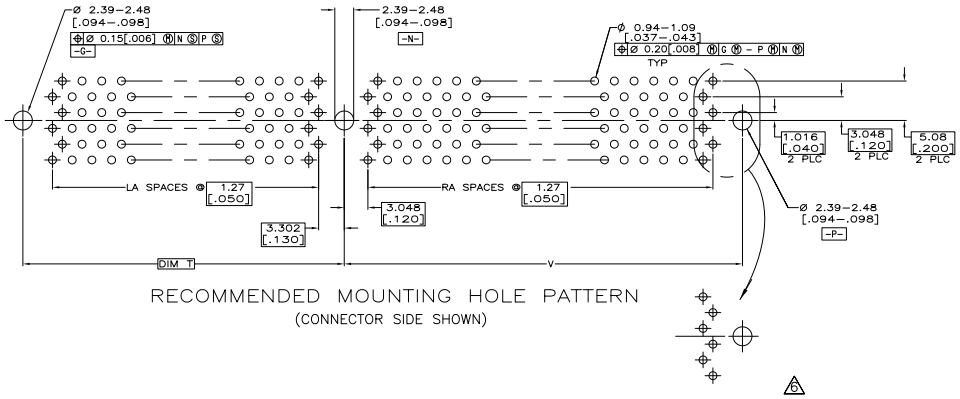

RECOMMENDED MOUNTING HOLE PATTERN
(CONNECTOR SIDE SHOWN)

ALTERNATIVE MOUNTING
HOLE PATTERN

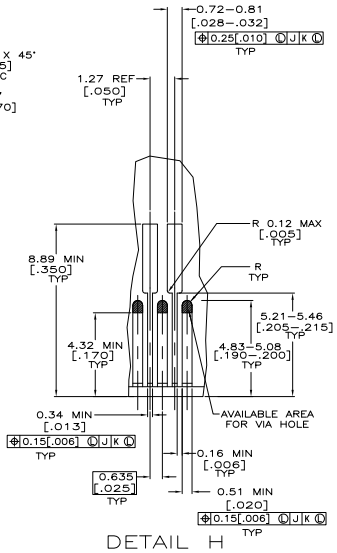

DETAIL H
SCALE 10:1

THIS DRAWING IS A CONTROLLED DOCUMENT.

DIMENSIONS: INCHES

TOLERANCE UNLESS OTHERWISE SPECIFIED:
0 PLC ± –
1 PLC ± –
2 PLC ± .13 [.005]
3 PLC ± –
4 PLC ± –
ANGLES ± 2°

MATERIAL –
FINISH –

TBR 12-20-04 A. FERNANDEZ-DOCKS
DSG 12-20-04 M. PERCHERKE
APVD 12-20-04 M. PERCHERKE
PRODUCT SPEC –
APPLICATION SPEC –
WEIGHT –

Tyco Electronics Corporation
Harrisburg, Pa 17105-3608

NAME: CONNECTOR ASSEMBLY, DUAL POSN, HIGH SPEED, STANDARD EDGE

SIZE A1 | CAGE CODE 00779 | DRAWING NO C-5145090 | RESTRICTED TO –

CUSTOMER DRAWING | SCALE 1:1 | SHEET 3 OF 3 | REV B1

AMP 4805 REV 31MR2000

27JUN05 11:26am us021428 H:\autocad\5145090_3c_B.dwg

Downloaded from Elcodis.com electronic components distributor