THIS DRAWING IS UNPUBLISHED. RELEASED FOR PUBLICATION - ,- .
© COPYRIGHT - By - ALL RIGHTS RESERVED.

REVISIONS

P	LTR	DESCRIPTION	DATE	DWN	APVD
	A	REVISED PER ECO-16-016569	23JAN2017	SY	SY

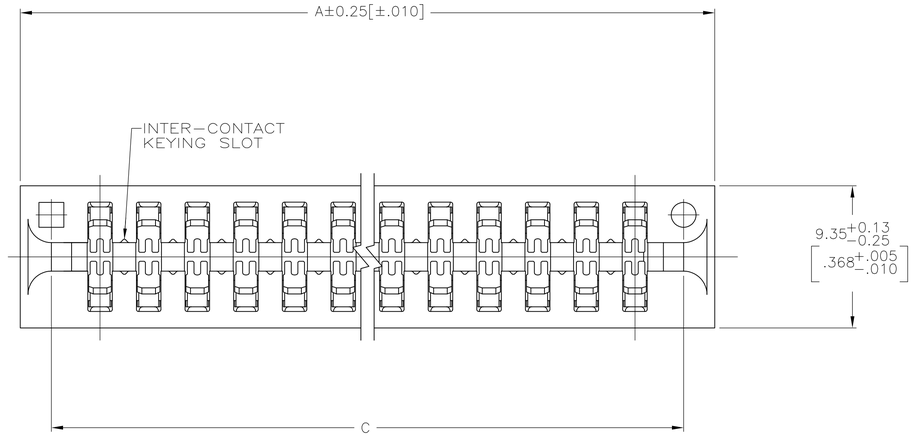

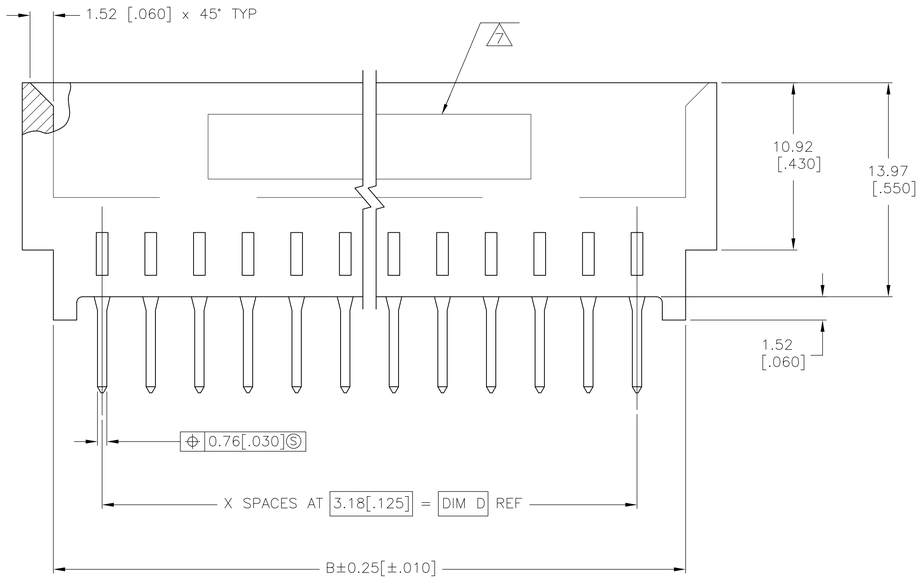

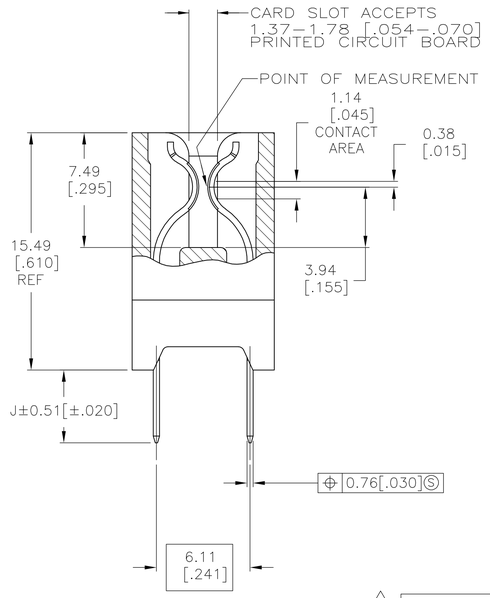

1. HOUSING: GLASS FILLED POLYESTER; COLOR: BLACK.
2. CONTACT: PHOSPHOR BRONZE.
3. CONTACT: 0.00127 [.000050] MIN NICKEL ALL OVER.
4. CONTACT: 0.00254 [.000100] MIN MATTE TIN ON SOLDER POSTS.
5. CONTACT: 0.00076 [.000030] MIN GOLD IN CONTACT AREA.
6. CONTACT: NICKEL PLATE PER MIL-G-45204. GOLD PLATE PER QQ-N-290.
7. AMP PART NUMBER AND DATE CODE ARE MARKED IN APPROXIMATE AREA SHOWN, EITHER SIDE.
8. RECOMMENDED PCB FINISHED HOLE DIA: 1.02±0.08 [.040±.003].
9. OBSOLETE PARTS: OBSOLETE CIS STREAMLINING PER D.RENAUD/D.SINISI

	J	D	C	B	A	X	NO OF POSN	PART NUMBER
9 OBSOLETE	4.75 [.187]	41.28 [1.625]	47.62 [1.875]	47.62 [1.875]	51.69 [2.035]	13	14	~~5-5530844-8~~
OBSOLETE	4.75 [.187]	155.98 [6.125]	161.92 [6.375]	161.92 [6.375]	165.99 [6.535]	~~49~~	~~50~~	~~2-5530844-2~~
	4.75 [.187]	123.82 [4.875]	130.18 [5.125]	130.18 [5.125]	134.24 [5.285]	39	40	2-5530844-0
9 OBSOLETE	4.75 [.187]	111.12 [4.375]	117.48 [4.625]	117.48 [4.625]	121.54 [4.785]	35	36	~~1-5530844-9~~
9 OBSOLETE	4.75 [.187]	92.08 [3.625]	98.42 [3.875]	98.42 [3.875]	102.49 [4.035]	29	30	~~1-5530844-8~~
	4.75 [.187]	85.72 [3.375]	92.08 [3.625]	92.08 [3.625]	96.14 [3.785]	27	28	1-5530844-7
	4.75 [.187]	66.68 [2.625]	73.02 [2.875]	73.02 [2.875]	77.09 [3.035]	21	22	1-5530844-6
OBSOLETE	4.75 [.187]	53.98 [2.125]	60.32 [2.375]	60.32 [2.375]	64.39 [2.535]	~~17~~	~~18~~	~~1-5530844-5~~
	3.18 [.125]	155.58 [6.125]	161.92 [6.375]	161.92 [6.375]	165.99 [6.535]	49	50	1-5530844-1
9 OBSOLETE	3.18 [.125]	133.35 [5.250]	139.70 [5.500]	139.70 [5.500]	143.76 [5.660]	42	43	~~1-5530844-0~~

THIS DRAWING IS A CONTROLLED DOCUMENT.

DIMENSIONS: mm [INCHES]

TOLERANCES UNLESS OTHERWISE SPECIFIED:
0 PLC ± -
1 PLC ± -
2 PLC ± -
3 PLC ± 0.13 [.005]
4 PLC ± -
ANGLES ± -

MATERIAL 1 2
FINISH 3 4 5 6

DWN R BROWN 02MAR2006
CHK M MILLER 02MAR2006
APVD M MILLER 02MAR2006
PRODUCT SPEC 108-9039
APPLICATION SPEC —
WEIGHT 0.000000
CUSTOMER DRAWING

TE Connectivity

NAME: CONNECTOR ASSEMBLY, STANDARD EDGE II, 3.18 [.125] CL

SIZE	CAGE CODE	DRAWING NO	RESTRICTED TO
A1	00779	C-5530844	—

SCALE 5:1 SHEET 1 OF 1 REV A

4805 (1/15)