Part Number: 1210230238

Status: Active

Overview: mPm® DIN Valve Connectors

Description: mPm® DIN Valve Connector, Gray, Form A, PG9 Internal Threads, 2 Pole Plus Ground Terminal, 250V AC/300V DC, Black Nitrile Gasket and Screw, Bulk Pack Mounted

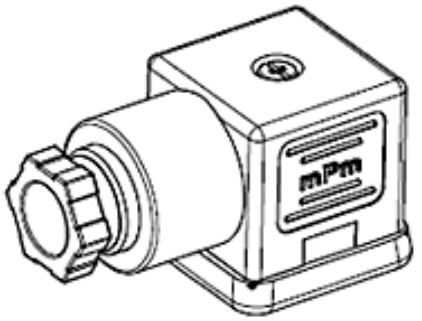

Series image - Reference only

Documents:

Drawing (PDF)
Product Specification STR-1552-001 (PDF)
Packaging Specification PK-121023-C18-001 (PDF)
RoHS Certificate of Compliance (PDF)

General

Product Family	Field Attachable / Accessories
Series	121023
Form	A
IP Rating	IP65, IP67
Overview	mPm® DIN Valve Connectors
Product Name	mPm®
Type	Field Attachable Connector
UPC	883906248925

Physical

Cable Diameter	N/A
Coupling Type	Internal Thread
Diagnostics / LEDs	No
Diagnostics Port	No
Gender	N/A
Keyway	None
Material - Connector Body	Polypropylene
Material - Contact	Brass
Material - Coupling Nut	N/A
Material - Plating Mating	Silver
Net Weight	24.040/g
Orientation	90° Angle
Pitch - Mating Interface	18.00mm
Poles	2
Temperature Range - Operating	-40°C to +90°C
Wire Size AWG	N/A

Electrical

Current - Maximum per Contact	16.0A
Voltage - Maximum	250V AC / 300V DC

Material Info

Engineering Number	C18209N21

Reference - Drawing Numbers

Packaging Specification	PK-121023-C18-001
Product Specification	STR-1552-001
Sales Drawing	SD-121023-001

EU ELV
Not Relevant

EU RoHS
Compliant with Exemption 6(c)

China RoHS

REACH SVHC
Not Contained Per -ED/01/2017 (12 January 2017)

Halogen-Free Status
Low-Halogen

Need more information on product environmental compliance?

Email productcompliance@molex.com
Please visit the Contact Us section for any non-product compliance questions.

China ROHS	50 Image
ELV	Not Relevant
RoHS Phthalates	Not Contained

Search Parts in this Series
121023 Series