REV.	DATE	DESCRIPTION
NC	01/09/05	INITIAL RELEASE

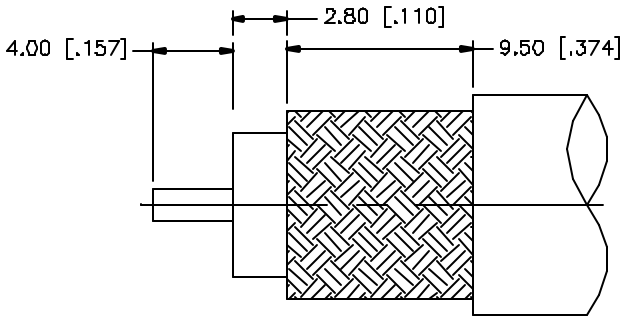

RECOMMENDED
CABLE STRIPPING DIM'S

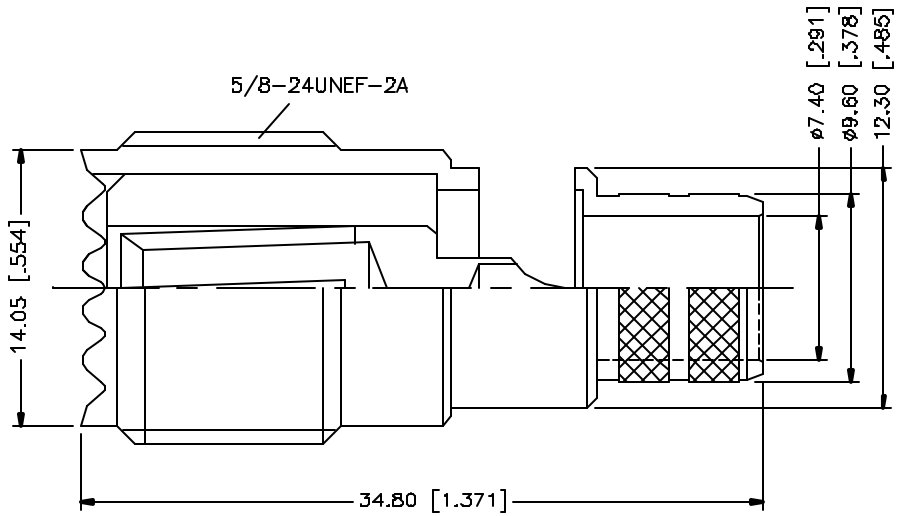

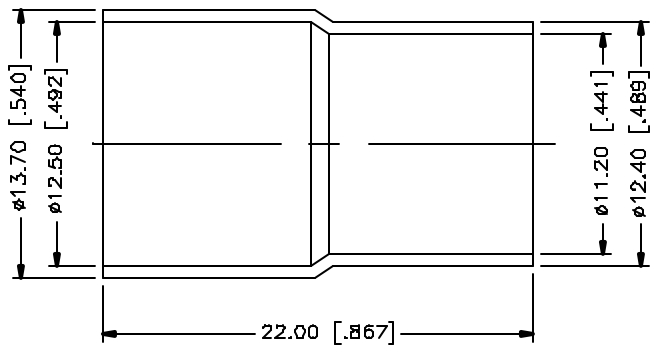

NOTE:

1. CRIMPED FERRULE
   HEX CRIMP SIZE .429"
2. CONTACT PIN TO SOLDER

8				
7				
6				
5				
4	FERRULE	COPPER	NICKEL	1
3	CONTACT PIN	BRASS	GOLD	1
2	INSULATOR	DELRIN	NATURAL	1
1	BODY	BRASS	NICKEL	1
	DESCRIPTION	MATERIAL	FINISH	QTY

UNLESS OTHERWISE SPECIFIED DIMENSIONS ARE IN MILLIMETERS. DIMENSIONS IN [ ] ARE IN INCHES AND FOR CUSTOMER REFERANCE ONLY.

UNLESS OTHERWISE SPECIFIED TOLERANCES FOR MILLIMETERS ARE:
0.5 – 6mm ± 0.20mm
6 – 30mm ± 0.40mm
30 – 120mm ± 0.50mm

UNLESS OTHERWISE SPECIFIED TOLERANCES FOR INCHES ARE:
.020 – .315 = ± 0.007"
.315 – 1.180 = ± 0.015"
1.180 – 4.724 = ± 0.020"

DO NOT SCALE DRAWING

APPROVALS		DATE
DRAWN	G.R.S.	01/09/05
CHECKED		
ISSUED		
SHEET	1 OF 1	

CAD FILE C:/182/182335.DWG

Amphenol Connex

PART DESCRIPTION
UHF CRIMP JACK
(FOR RG-8/U CABLE)

PART NO. 182335

DWG. NO.	NC	SIZE	SCALE
182335.DWG	NC	A	NA

Downloaded from Elcodis.com electronic components distributor