Distributed by:

JAMECO® ELECTRONICS

www.Jameco.com ✦ 1-800-831-4242

The content and copyrights of the attached material are the property of its owner.

Jameco Part Number 738478

THIS DRAWING IS UNPUBLISHED. RELEASED FOR PUBLICATION -,- .
© COPYRIGHT - BY TYCO ELECTRONICS CORPORATION. ALL RIGHTS RESERVED.

| LOC | DIST |
|---|---|
| AD | 00 |

REVISIONS

| P | LTR | DESCRIPTION | DATE | DWN | APVD |
|---|---|---|---|---|---|
| | P | EC 0G3C 0789 04 | 01-02-05 | BSV | JLG |

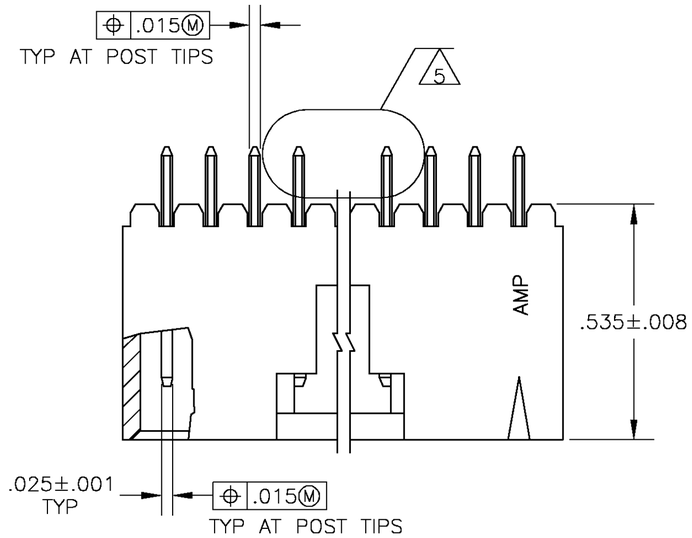


1. .000030 GOLD IN THE CONTACT AREA, .000100–.000200 MATTE TIN–LEAD ON THE SOLDER TAIL, ALL OVER .000050 NICKEL
2. POINT OF MEASUREMENT FOR PLATING THICKNESS
3. THESE DIMENSIONS APPLY WHERE THE POST INTERSECTS THE HOUSING
4. ON ASSEMBLIES WITH FOUR OR MORE POSITIONS, TWO POLARIZATION SLOTS. ON ASSEMBLIES WITH TWO OR THREE POSITIONS, ONE POLARIZATION SLOT.
5. SELECT POST TAILS FORMED TO PROVIDE CONNECTOR HOLD DOWN UNTIL SOLDERED. CONFIGURATION ACCEPTS .027–.080 THICK PRINTED CIRCUIT BOARD. (SEE DETAIL Z)
6. .000030 GOLD IN THE CONTACT AREA, .000100–.000200 MATTE TIN ON THE SOLDER TAIL, ALL OVER .000050 NICKEL
7. HIGH TEMPERATURE CONFIGURATION
8. STANDOFFS NOT PRESENT ON UNDERSIDE OF ASSEMBLY

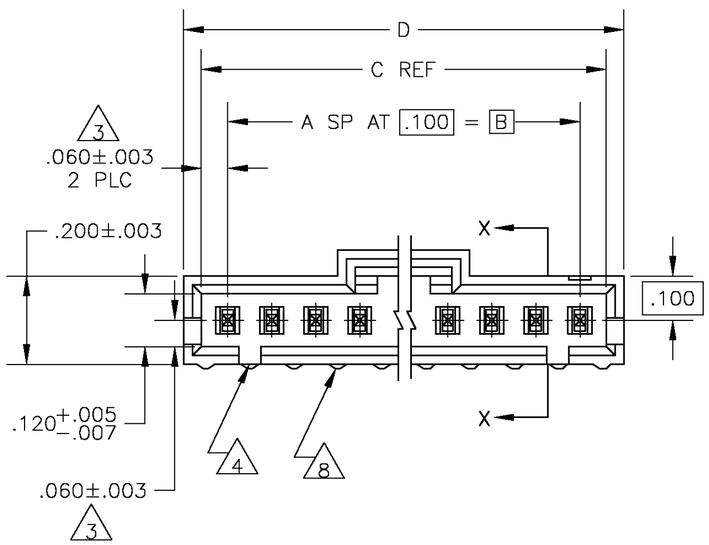


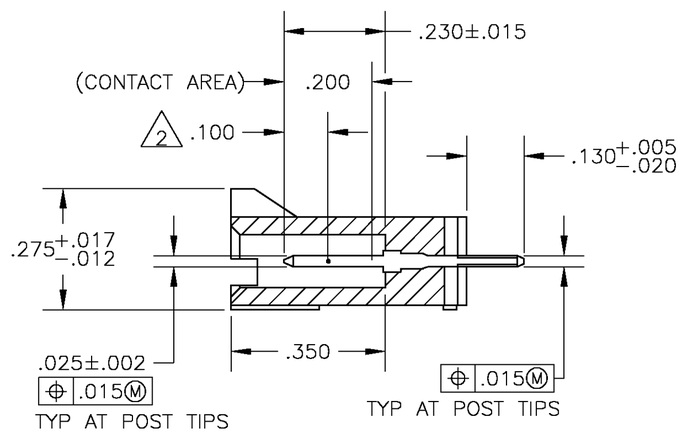


SECTION X–X

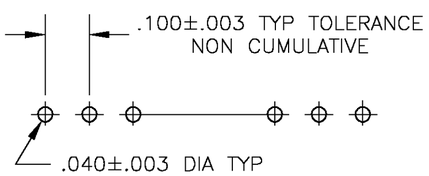


RECOMMENDED HOLE LAYOUT

DETAIL Z
POST DETAIL TYP
2 POST MINIMUM

| REMARKS | PLATING | D | C | B | A | NO OF POSN | ASSEMBLY PART NUMBER |
|---|---|---|---|---|---|---|---|
| 7 8 | 6 | 2.600 | 2.520 | 2.400 | 24 | 25 | 7–103908–4 |
| 7 8 | 6 | 2.500 | 2.420 | 2.300 | 23 | 24 | 7–103908–3 |
| 7 8 | 6 | 2.400 | 2.320 | 2.200 | 22 | 23 | 7–103908–2 |
| 7 8 | 6 | 2.300 | 2.220 | 2.100 | 21 | 22 | 7–103908–1 |
| 7 8 | 6 | 2.200 | 2.120 | 2.000 | 20 | 21 | 7–103908–0 |
| 7 8 | 6 | 2.100 | 2.020 | 1.900 | 19 | 20 | 6–103908–9 |
| 7 8 | 6 | 2.000 | 1.920 | 1.800 | 18 | 19 | 6–103908–8 |
| 7 8 | 6 | 1.900 | 1.820 | 1.700 | 17 | 18 | 6–103908–7 |
| 7 8 | 6 | 1.800 | 1.720 | 1.600 | 16 | 17 | 6–103908–6 |
| 7 8 | 6 | 1.700 | 1.620 | 1.500 | 15 | 16 | 6–103908–5 |
| 7 8 | 6 | 1.600 | 1.520 | 1.400 | 14 | 15 | 6–103908–4 |
| 7 8 | 6 | 1.500 | 1.420 | 1.300 | 13 | 14 | 6–103908–3 |
| 7 8 | 6 | 1.400 | 1.320 | 1.200 | 12 | 13 | 6–103908–2 |
| 7 8 | 6 | 1.300 | 1.220 | 1.100 | 11 | 12 | 6–103908–1 |
| 7 8 | 6 | 1.200 | 1.120 | 1.000 | 10 | 11 | 6–103908–0 |
| 7 8 | 6 | 1.100 | 1.020 | .900 | 9 | 10 | 5–103908–9 |
| 7 8 | 6 | 1.000 | .920 | .800 | 8 | 9 | 5–103908–8 |
| 7 8 | 6 | .900 | .820 | .700 | 7 | 8 | 5–103908–7 |
| 7 8 | 6 | .800 | .720 | .600 | 6 | 7 | 5–103908–6 |
| 7 8 | 6 | .700 | .620 | .500 | 5 | 6 | 5–103908–5 |
| 7 8 | 6 | .600 | .520 | .400 | 4 | 5 | 5–103908–4 |
| 7 8 | 6 | .500 | .420 | .300 | 3 | 4 | 5–103908–3 |
| 7 8 | 6 | .400 | .320 | .200 | 2 | 3 | 5–103908–2 |
| 7 8 | 6 | .300 | .220 | .100 | 1 | 2 | 5–103908–1 |
| | 1 | 2.600 | 2.520 | 2.400 | 24 | 25 | 2–103908–4 |
| | 1 | 2.500 | 2.420 | 2.300 | 23 | 24 | 2–103908–3 |
| | 1 | 2.400 | 2.320 | 2.200 | 22 | 23 | 2–103908–2 |
| | 1 | 2.300 | 2.220 | 2.100 | 21 | 22 | 2–103908–1 |
| | 1 | 2.200 | 2.120 | 2.000 | 20 | 21 | 2–103908–0 |
| | 1 | 2.100 | 2.020 | 1.900 | 19 | 20 | 1–103908–9 |
| | 1 | 2.000 | 1.920 | 1.800 | 18 | 19 | 1–103908–8 |
| | 1 | 1.900 | 1.820 | 1.700 | 17 | 18 | 1–103908–7 |
| | 1 | 1.800 | 1.720 | 1.600 | 16 | 17 | 1–103908–6 |
| | 1 | 1.700 | 1.620 | 1.500 | 15 | 16 | 1–103908–5 |
| | 1 | 1.600 | 1.520 | 1.400 | 14 | 15 | 1–103908–4 |
| | 1 | 1.500 | 1.420 | 1.300 | 13 | 14 | 1–103908–3 |
| | 1 | 1.400 | 1.320 | 1.200 | 12 | 13 | 1–103908–2 |
| | 1 | 1.300 | 1.220 | 1.100 | 11 | 12 | 1–103908–1 |
| | 1 | 1.200 | 1.120 | 1.000 | 10 | 11 | 1–103908–0 |
| | 1 | 1.100 | 1.020 | .900 | 9 | 10 | 103908–9 |
| | 1 | 1.000 | .920 | .800 | 8 | 9 | 103908–8 |
| | 1 | .900 | .820 | .700 | 7 | 8 | 103908–7 |
| | 1 | .800 | .720 | .600 | 6 | 7 | 103908–6 |
| | 1 | .700 | .620 | .500 | 5 | 6 | 103908–5 |
| | 1 | .600 | .520 | .400 | 4 | 5 | 103908–4 |
| | 1 | .500 | .420 | .300 | 3 | 4 | 103908–3 |
| | 1 | .400 | .320 | .200 | 2 | 3 | 103908–2 |
| | 1 | .300 | .220 | .100 | 1 | 2 | 103908–1 |

THIS DRAWING IS A CONTROLLED DOCUMENT.

DIMENSIONS: INCHES

TOLERANCES UNLESS OTHERWISE SPECIFIED:
0 PLC ± –
1 PLC ± –
2 PLC ± –
3 PLC ± .005
4 PLC ± –
ANGLES ± –

MATERIAL HOUSING: FLAME RETARDENT THERMOPLASTIC COLOR–BLACK
CONTACTS–BRASS

FINISH: SEE TABLE

DWN H MOLL 7-28-86
CHK PC deJONG 7-28-86
APVD PC deJONG 7-28-86
PRODUCT SPEC –
APPLICATION SPEC –
WEIGHT –

tyco Electronics
Tyco Electronics Corporation
Harrisburg, Pa 17105–3608

NAME: HEADER ASSY, AMPMODU MTE, VERTICAL, SINGLE ROW, .100 ℄, .025 SQ POSTS WITH LATCH & RETENTIVE POSTS

| SIZE | CAGE CODE | DRAWING NO | RESTRICTED TO |
|---|---|---|---|
| A2 | 00779 | C–103908 | – |

CUSTOMER DRAWING | SCALE 4:1 | SHEET 1 OF 1 | REV P

103908

AMP 1471–9 REV 31MAR2000

21MAR05 2:35pm us034723