THIS DRAWING IS UNPUBLISHED. RELEASED FOR PUBLICATION 20
© COPYRIGHT 20 BY - ALL RIGHTS RESERVED.

REVISIONS

P	LTR	DESCRIPTION	DATE	DWN	APVD
	M	ECO-13-012991	14AUG2013	JM	TE

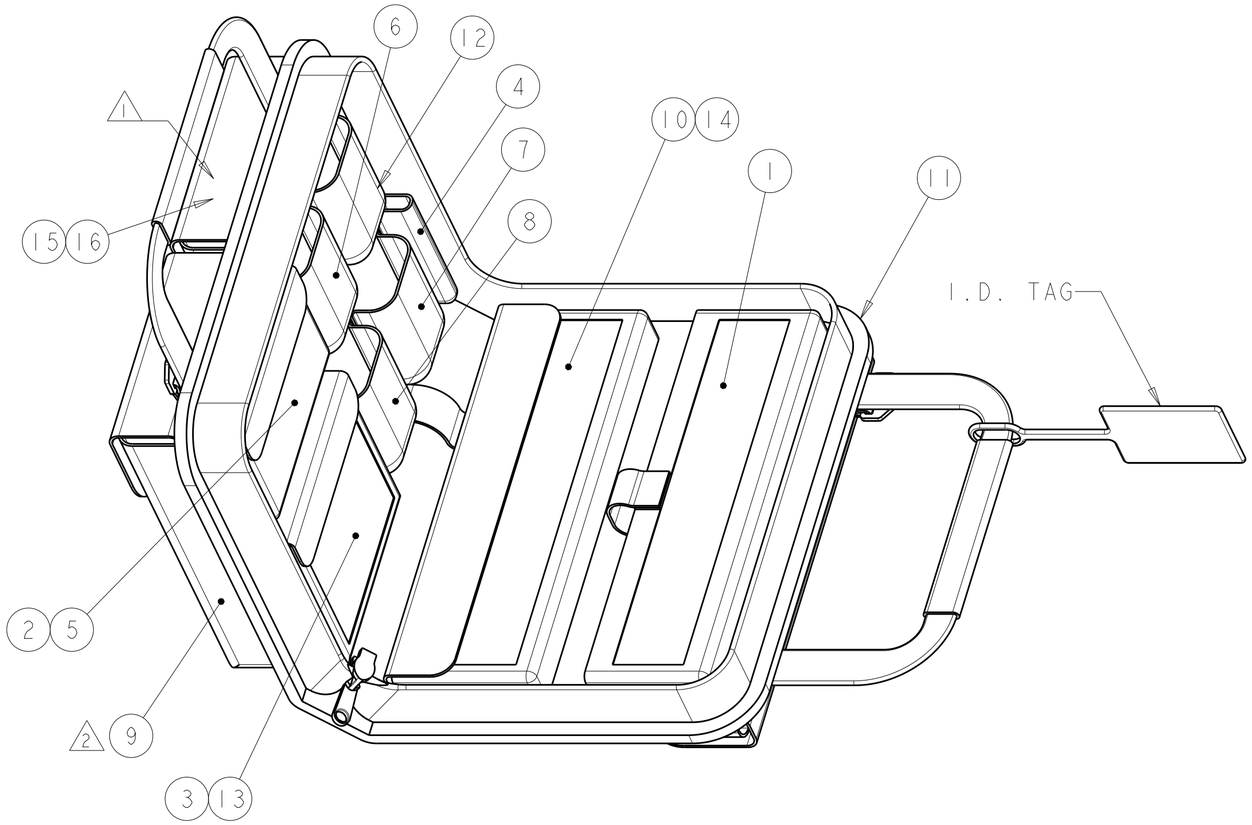

1 MANUFACTURER'S INSTRUCTION SHEETS.

2 OPTIONAL SHOULDER STRAP.

3. INSTRUCTION SHEETS 408-4020, 408-8925, 408-4471 AND 408-10103 EXPLAIN THE LightCrimp Plus TERMINATION TECHNIQUE AND ARE AVAILABLE FOR DOWNLOAD AT www.tycoelectronics.com/documents OR www.ampnetconnect.com/foguide

-2	-1	PART NUMBER	DESCRIPTION	ITEM NO.
1	1	2064710-1	FIBER OPTICS CLEANING & INSPECTION GUIDE	16
1	1	1374503-1	CD ROM, TERMINATION TRAINING	15
1	-	1754765-1	MICROSCOPE ADAPTER, 1.25mm	14
1	1	1278625-1	CABLE CLAMP	13
1	1	1553661-1	SLITTER TOOL, 2mm & 3mm	12
1	1	1278540-1	PREMIUM SOFT CASE	11
1	-	1754767-1	200x MICROSCOPE KIT	10
1	1	1871696-1	FIBER CLEAVER, SLIDE CUTTER	9
1	1	1278637-1	ARAMID YARN SHEARS	8
1	1	1754708-1	FIBER STRIP TOOL, COMBINATION	7
1	1	492109-2	MICRO STRIP TOOL MT-RJ (.008IN)	6
14	14	501857-2	ALCOHOL WIPES	5
2	2	1278422-1	OPEN END WRENCH, 1/4IN	4
1	1	2064540-1	CABLE HOLDER, LightCrimp Plus/LC/SC	3
1	1	1985766-1	DIESET, LightCrimp Plus/LC/SC/SPLICE	2
1	1	1976850-2	HANDTOOL FRAME, BLACK	1

THIS DRAWING IS A CONTROLLED DOCUMENT.

DIMENSIONS: mm

TOLERANCES UNLESS OTHERWISE SPECIFIED:
0 PLC ±-
1 PLC ±-
2 PLC ±-
3 PLC ±-
4 PLC ±-
ANGLES ±-

MATERIAL - -
FINISH - -

DWN B.BRIGGS 17MAY2006
CHK D.KIRSCH 17MAY2006
APVD S.BUCHTER 17MAY2006
PRODUCT SPEC -
APPLICATION SPEC -
WEIGHT -

TE Connectivity

NAME TERMINATION KIT, LightCrimp Plus, AMP SC/LC -

SIZE	CAGE CODE	DRAWING NO	RESTRICTED TO
A2	-	C-1754845	-

CUSTOMER DRAWING

SCALE NTS SHEET 1 OF 1 REV M