THIS DRAWING IS UNPUBLISHED. RELEASED FOR PUBLICATION 20
© COPYRIGHT 20 BY - ALL RIGHTS RESERVED.

LOC	DIST
CM	00

REVISIONS

P	LTR	DESCRIPTION	DATE	DWN	APVD
	J	REVISED PER ECO-15-003291	27JULY2015	SC	DZ

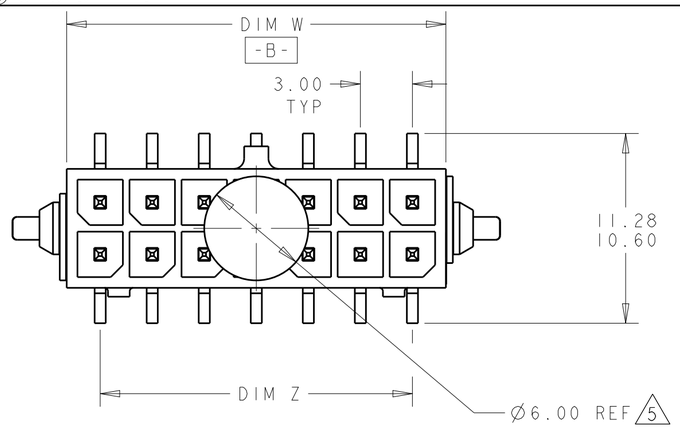

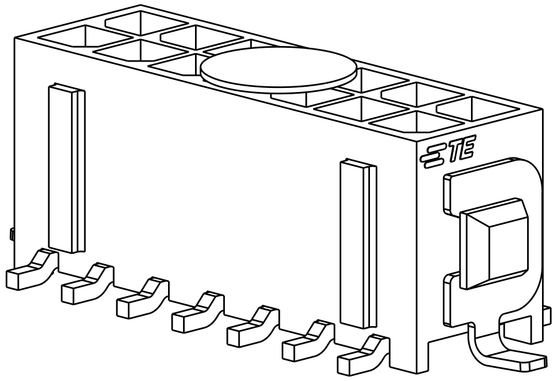

SCALE 6:1

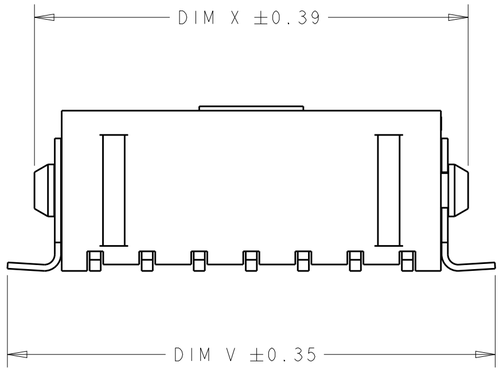

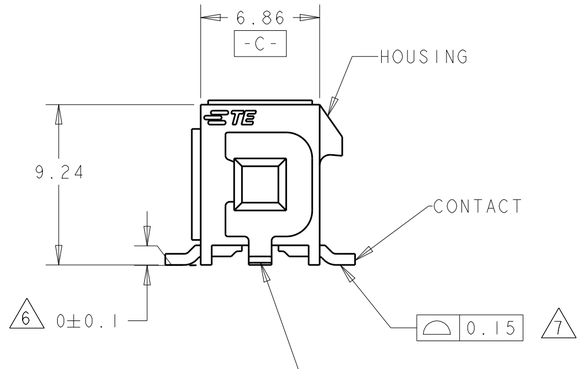

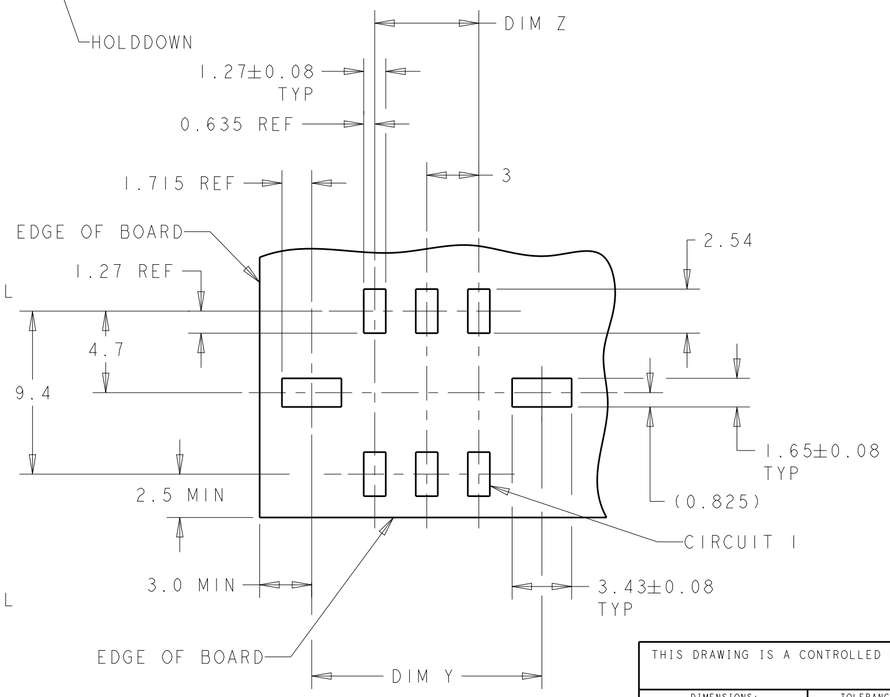

RECOMMENDED PCB LAYOUT 4
(COMPONENT SIDE)

1 MATERIAL;
CONTACTS - BRASS.
HOUSING - UL 94V-0 RATED HIGH TEMP NYLON, COLOR; BLACK.
HOLDDOWNS - PHOSPHOR BRONZE.

2 PLATING;
CONTACTS - 0.38µm MINIMUM GOLD OVER 2.54µm MINIMUM NICKEL ON MATING AREA. 2.54µm TIN-LEAD MINIMUM OVER 2.54µm NICKEL MINIMUM ON SOLDER TAILS.
HOLDOWNS - 2.54µm TIN LEAD.

4 RECOMMENDED PC BOARD THICKNESS OF 1.57.

5 KAPTON VACUUM PICK UP BUTTON.

6 DIMENSION APPLIES TO SOLDERTAIL SURFACES AND STANDOFF SURFACES.

7 ALL SOLDERTAILS AND HOLDDOWNS.

8 PLATING;
CONTACTS - 0.38µm MINIMUM GOLD OVER 2.54µm MINIMUM NICKEL ON MATING AREA. 2.54µm MATTE TIN MINIMUM OVER 2.54µm NICKEL MINIMUM ON SOLDER TAILS.
HOLDOWNS - 2.54µm MATTE TIN.

FINISH	DIM V	DIM W	DIM Y	DIM Z	DIM X	NO. OF POSN.	PART NUMBER
8	43.04	36.86	40.27	33.00	40.00	24	5-794637-4
8	40.04	33.86	37.27	30.00	37.00	22	5-794637-2
8	37.04	30.86	34.27	27.00	34.00	20	5-794637-0
8	34.04	27.86	31.27	24.00	31.00	18	4-794637-8
8	31.04	24.86	28.27	21.00	28.00	16	4-794637-6
8	28.04	21.86	25.27	18.00	25.00	14	4-794637-4
8	25.04	18.86	22.27	15.00	22.00	12	4-794637-2
8	22.04	15.86	19.27	12.00	19.00	10	4-794637-0
8	19.04	12.86	16.27	9.00	16.00	8	3-794637-8
8	16.04	9.86	13.27	6.00	13.00	6	3-794637-6
8	13.04	6.86	10.27	3.00	10.00	4	3-794637-4
8	10.04	3.86	7.27	-	7.00	2	3-794637-2
2	43.04	36.86	40.27	33.00	40.00	24	2-794637-4
2	40.04	33.86	37.27	30.00	37.00	22	2-794637-2
2	37.04	30.86	34.27	27.00	34.00	20	2-794637-0
2	34.04	27.86	31.27	24.00	31.00	18	1-794637-8
2	31.04	24.86	28.27	21.00	28.00	16	1-794637-6
2	28.04	21.86	25.27	18.00	25.00	14	1-794637-4
2	25.04	18.86	22.27	15.00	22.00	12	1-794637-2
2	22.04	15.86	19.27	12.00	19.00	10	1-794637-0
2	19.04	12.86	16.27	9.00	16.00	8	794637-8
2	16.04	9.86	13.27	6.00	13.00	6	794637-6
2	13.04	6.86	10.27	3.00	10.00	4	794637-4
2	10.04	3.86	7.27	-	7.00	2	794637-2

794637

THIS DRAWING IS A CONTROLLED DOCUMENT.

DIMENSIONS: mm

TOLERANCES UNLESS OTHERWISE SPECIFIED:
0 PLC ±-
1 PLC ±-
2 PLC ±0.13
3 PLC ±-
4 PLC ±-
ANGLES ±-
FINISH SEE TABLE

MATERIAL 1

METRIC

DWN 19-MAR-2003 K. WHITAKER
CHK 19-MAR-2003 C. JONES
APVD 19-MAR-2003 C. JONES
PRODUCT SPEC -
APPLICATION SPEC -
WEIGHT -

TE Connectivity

NAME SURFACE MOUNT, VERTICAL, MECHANICAL HOLDDOWN, ASSEMBLY, 15 GOLD HEADER DUAL ROW, MICRO MATE-N-LOK TM

SIZE A2 | CAGE CODE 00779 | DRAWING NO C-794637 | RESTRICTED TO -

CUSTOMER DRAWING | SCALE 4:1 | SHEET 1 OF 1 | REV J

1471-9 (3/11)