THIS DRAWING IS UNPUBLISHED. RELEASED FOR PUBLICATION -,- .
© COPYRIGHT 2011 BY TYCO ELECTRONICS CORPORATION. ALL RIGHTS RESERVED.

LOC	DIST
DW	—

REVISIONS

P	LTR	DESCRIPTION	DATE	DWN	APVD
	D	REVISED (ECR-13-002453) DRAWING REDRAW & HOUSING STRUCTURE CHANGED	02JUL'13	E.L.	W.K.

NOTES:
1. MATERIAL:
   1.1 HOUSING: LCP WITH 30% GF, UL94 V-0, WHITE COLOR
   1.2 EJECTOR: LCP WITH 30% GF, UL94 V-0, BLACK COLOR
   1.3 PICKPAD: LCP WITH 30% GF, UL94 V-0, BLACK COLOR
   1.4 CONTACTS: BRASS.
   1.5 BOARDLOCKS: BRASS.
   1.6 PIVOT SHELL: STEEL.
2. FINISH:
   2.1 CONTACT: 0.381um [15u"] MIN. GOLD PLATED ON CONTACT AREA, 2.54um [100u"] MIN MATTE-TIN ON SOLDER TAIL,CONTACT 1.27um [50u"] MIN. NICKEL UNDERPLATED OVERALL.
   2.2 BOARDLOCK: 2.54um [100u"] MIN MATTE-TIN PLATED OVERALL. 1.27um [50u"] MIN. NICKEL UNDERPLATED OVERALL.
3. REFLOW SOLDER CAPABLE TO 260°C PER TE SPEC. TEC-109-201, CONDITION B.
4. MEET COMPACT FLASH INDUSTRY STANDARD.
5. "Q" CTQ DIMENSION FOR SPECIAL CONTROL.
6. APPLY TO WORKMANSHIP SPEC: 101-708.

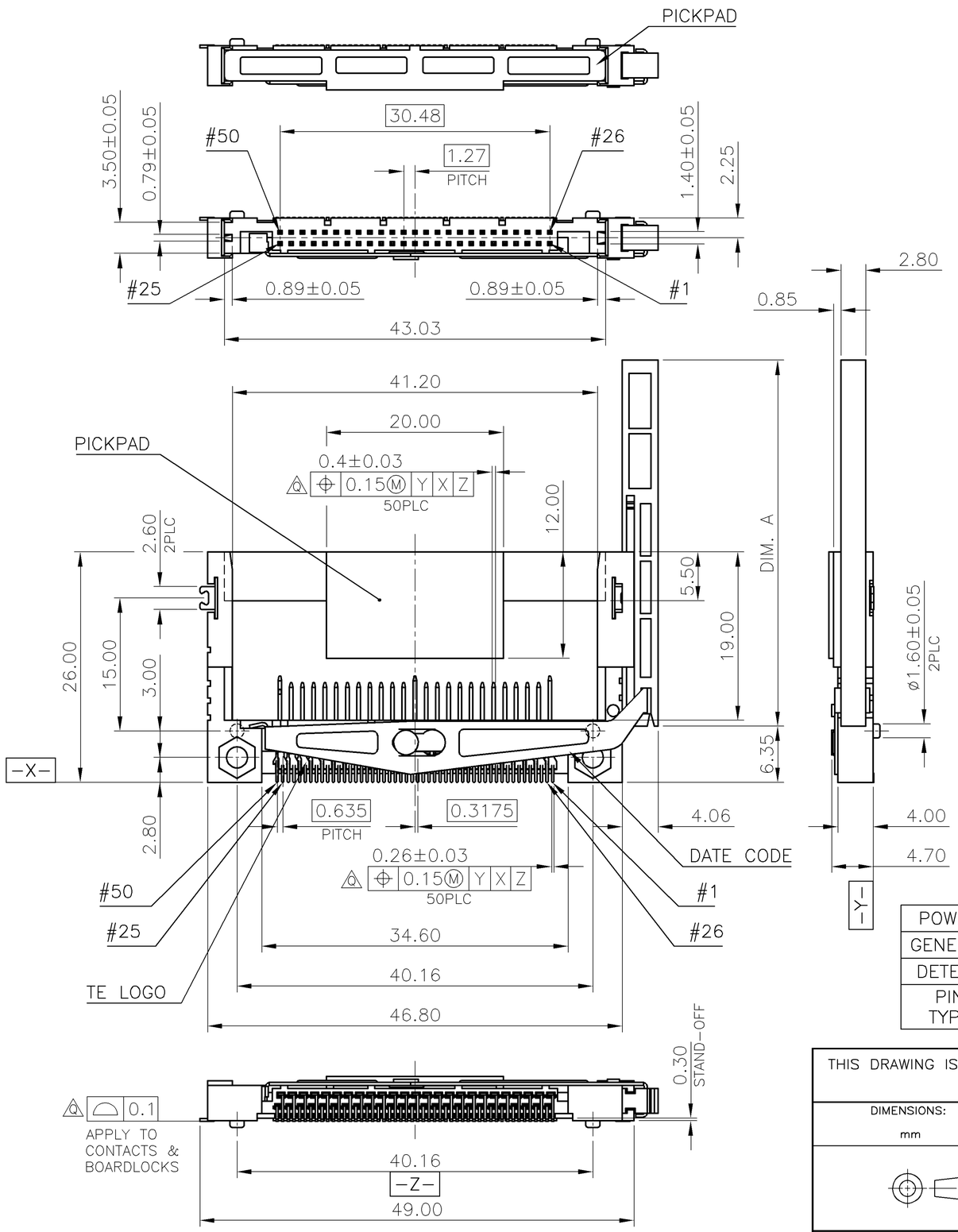

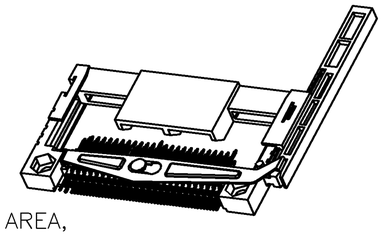

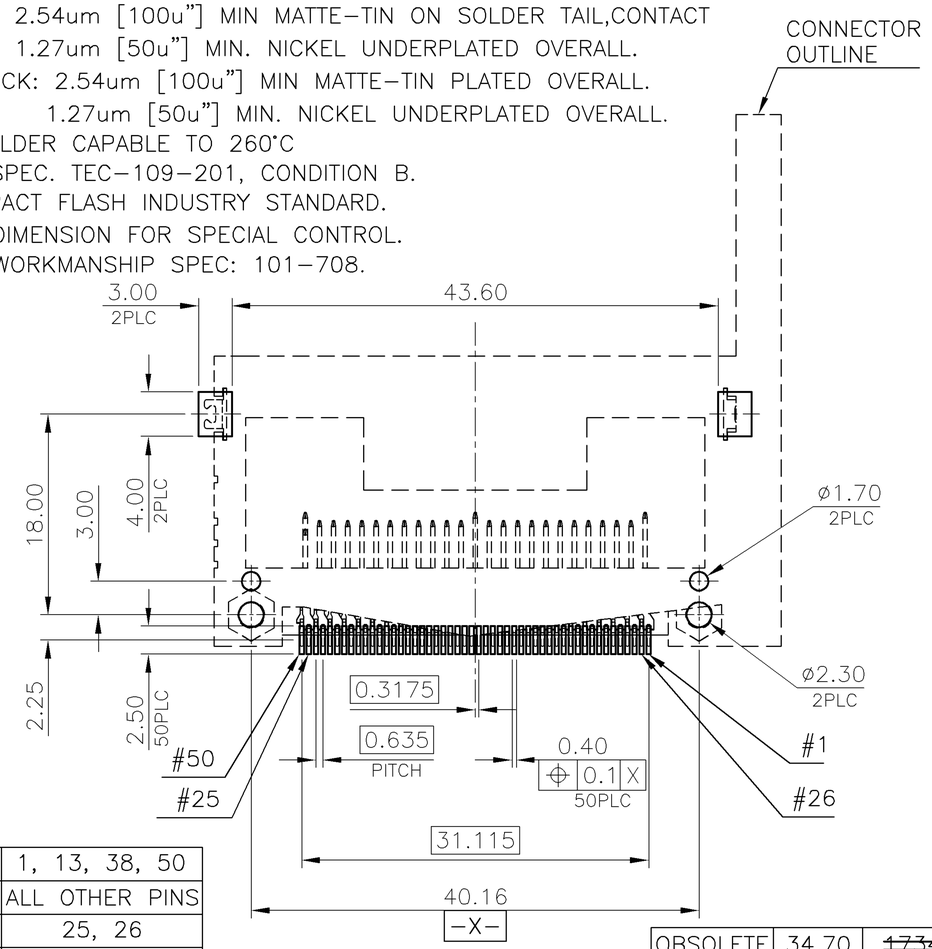

RECOMMENDED PCB LAYOUT
(TOLERANCE:±0.05)

POWER	5.00mm	1, 13, 38, 50
GENERAL	4.25mm	ALL OTHER PINS
DETECT	3.50mm	25, 26
PIN TYPE	INTERFACE DIM. L	PIN NO.

OBSOLETE	34.70	~~1734909-2~~
	41.30	1734909-1
	DIM. A	PART NUMBER

THIS DRAWING IS A CONTROLLED DOCUMENT.

DIMENSIONS: mm

TOLERANCES UNLESS OTHERWISE SPECIFIED:
0 PLC ± –
1 PLC ± 0.3
2 PLC ± 0.2
3 PLC ± 0.15
4 PLC ± –
ANGLES ± 3°

MATERIAL: SEE NOTE
FINISH: SEE NOTE

DWN	S. CHIEN	16JUL2008
CHK	S. CHIEN	16JUL2008
APVD	W. KODAMA	16JUL2008
PRODUCT SPEC	108-57134	
APPLICATION SPEC	—	
WEIGHT	3.72 GRAMS	

TE Connectivity

NAME: COMPACT FLASH CARD CONNECTOR PIN HEADER, 50 POS, SMT TYPE, WITH EJECTOR

SIZE	CAGE CODE	DRAWING NO	RESTRICTED TO
A3	00779	C-1734909	—

CUSTOMER DRAWING | SCALE — | SHEET 1 OF 2 | REV D

THIS DRAWING IS UNPUBLISHED. RELEASED FOR PUBLICATION -,- .
© COPYRIGHT 2011 BY TYCO ELECTRONICS CORPORATION. ALL RIGHTS RESERVED.

LOC	DIST
DW	—

REVISIONS

P	LTR	DESCRIPTION	DATE	DWN	APVD
		SEE SHEET 1.			

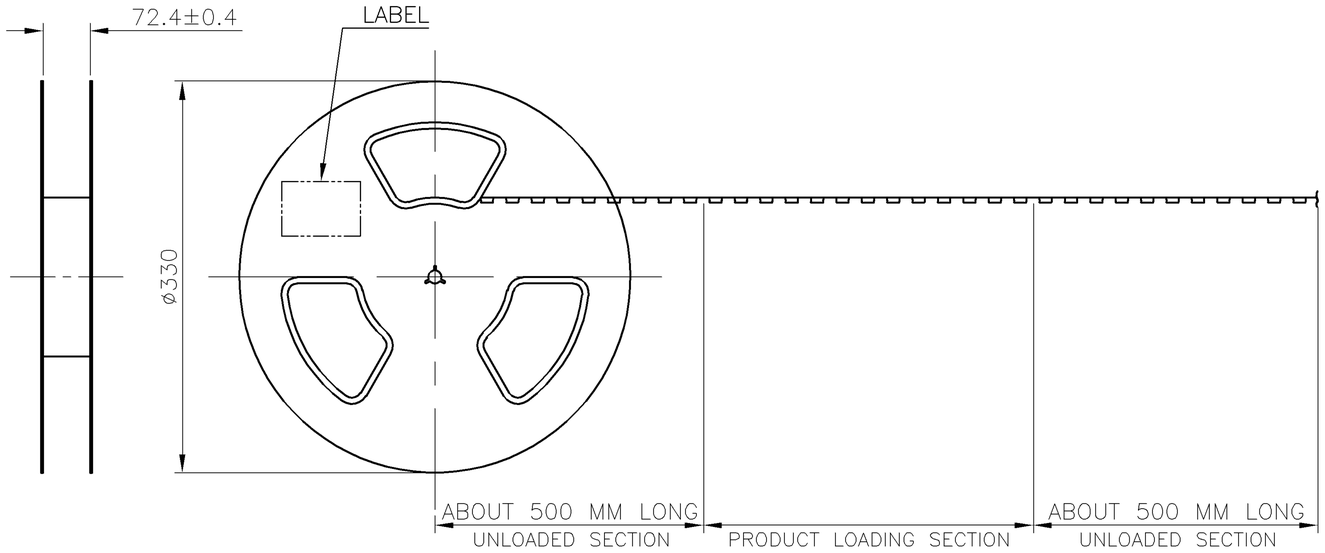

USER DIRECTION OF UNREELING

NOTES:
1. MATERIAL:
   REEL: PS.
   SHIPPING BOX: CORRUGATED FIBERBOARD
2. DIMENSION:
   REEL: ø330*72
   SHIPPING BOX: L=350mm, W=350mm, H=360mm
3. QUANTITY: SEE TABLE
4. WEIGHT: SEE TABLE
5. EACH BAG SHALL BE INCLUDED:
   * DESICCANT

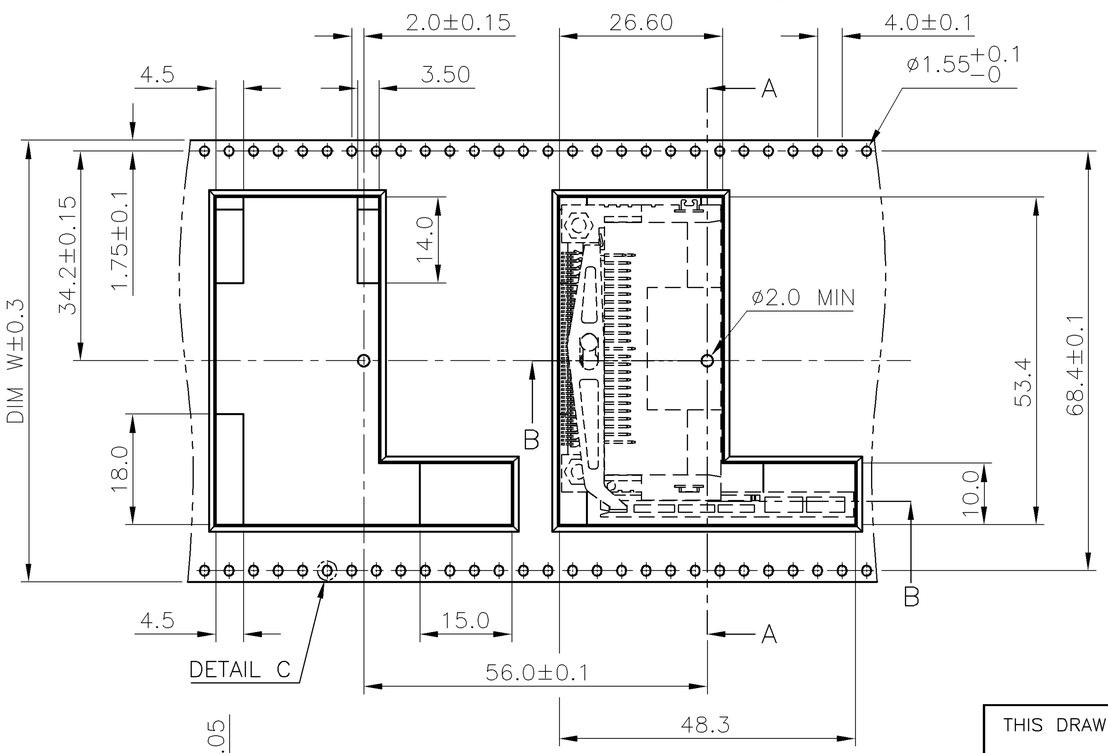

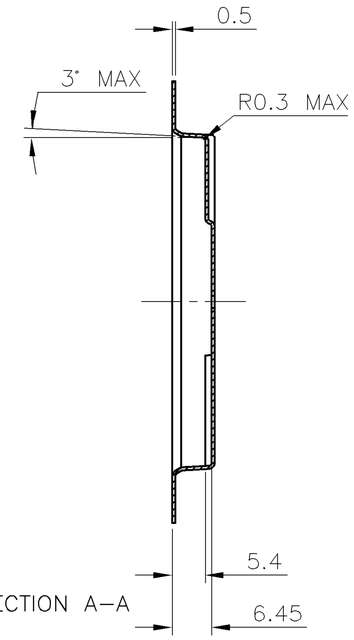

SECTION A–A

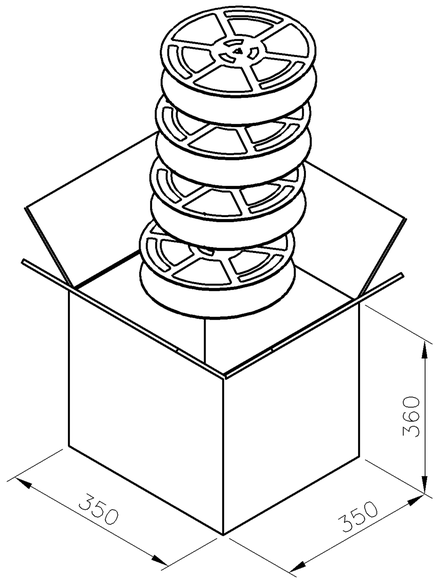

72	6.24 KG	2.31 KG	110	4	440
DIM W	GROSS WEIGHT	NET WEIGHT	PCS/ REEL	REEL/ BOX	PCS/ BOX

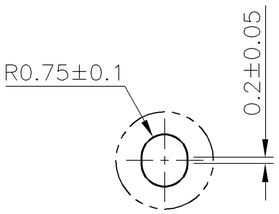

DETAIL C
SCALE 5:1

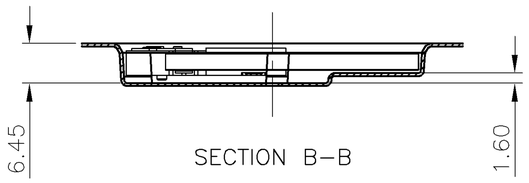

SECTION B–B

THIS DRAWING IS A CONTROLLED DOCUMENT.

DIMENSIONS: mm

TOLERANCES UNLESS OTHERWISE SPECIFIED:

0 PLC	± –
1 PLC	± 0.3
2 PLC	± 0.2
3 PLC	± 0.15
4 PLC	± –
ANGLES	± 3°

MATERIAL –

FINISH –

DWN –
CHK –
APVD –
PRODUCT SPEC —
APPLICATION SPEC —
WEIGHT —

TE Connectivity

NAME
COMPACT FLASH CARD CONNECTOR
PIN HEADER, 50 POS, SMT TYPE, WITH EJECTOR

SIZE	CAGE CODE	DRAWING NO	RESTRICTED TO
A3	00779	C-1734909	—

CUSTOMER DRAWING | SCALE — | SHEET 2 OF 2 | REV D

1470-19 (1/08)