THIS DRAWING IS UNPUBLISHED. RELEASED FOR PUBLICATION 20
© COPYRIGHT 20 BY TYCO ELECTRONICS CORPORATION. ALL RIGHTS RESERVED.

| PART NUMBER | REV | FIRST USED | POWER UNIT | FEED TYPE | DESCRIPTION |
|---|---|---|---|---|---|
| 1852169-1 | A | 122500-1 | LEADMAKER | POST FEED | CUTS CARRIER |
| 1852169-2 | A | 565435-5 | BENCH MODEL K | PRE FEED | CUTS CARRIER |
| 1852169-3 | A | 354500-1 | BENCH MODEL G | PRE FEED | CUTS CARRIER |
| 1852169-6 | A | 122500-1 | LEADMAKER | POST FEED | CONTINIOUS CARRIER |
| 7-1852169-7 | A | - | - | - | SPARE PARTS |

1. RECOMMENDED SPARE PARTS
2. GREASE LIGHTLY
3. GUARD MUST BE IN PLACE WHEN OPERATING APPLICATOR IN A BENCH MACHINE

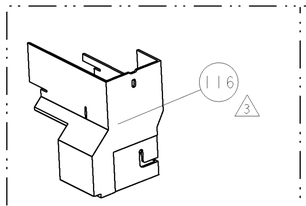


AMP-O-LECTRIC TERM GUARD

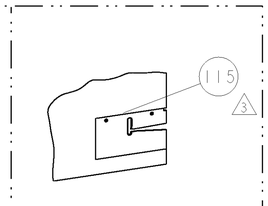


G TERMINATOR GUARD

TERMINAL NAME: W TYPE MALE TERMINAL

| TYCO PN | CUST PN | YAZAKI TERMINAL - AMP CRIMP SPECS | | | |
|---|---|---|---|---|---|
| 1572876 | 7114-1232 | | | | |
| - | - | PAD LTR | CRIMP HEIGHT | | WIRE SIZE |
| - | - | A | .059±.002[1.50±0.05mm] | | 18 AWG |
| - | - | B | .055±.002[1.40±0.05mm] | | 20 AWG |
| - | - | C | .052±.002[1.32±0.05mm] | | 22 AWG |
| - | - | D | - | | - |
| - | - | CRIMP | SIZE | TYPE | RANGE |
| SEAL PN. | - | | | | |
| 1572877 | 7158-3112-70 | WIRE | .090 [2.29mm] | F | 22-18 AWG |
| - | - | INSUL | .190 [4.83mm] | O | - |
| WIRE STRIP LENGTH | TERM APPL SPEC | FEED | APPL INSTRUCTIONS | SET UP GAGE | |
| .191 -.206 | NONE | .594 | 408-8040 | 458637-1 | |

| LOC | DIST |
|---|---|
| A | 66 |

REVISIONS

| P | LTR | DESCRIPTION | DATE | DWN | APVD |
|---|---|---|---|---|---|
| | A | RELEASED | 06DEC2005 | LG | TE |

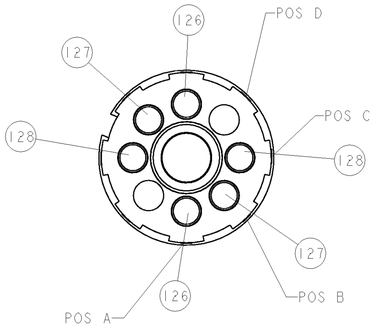


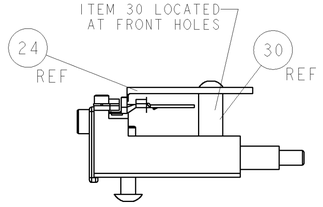


FEED TRACK POSITION

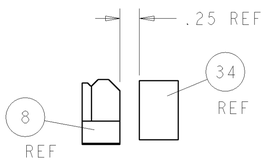


TERMINAL SUPPORT LOCATION

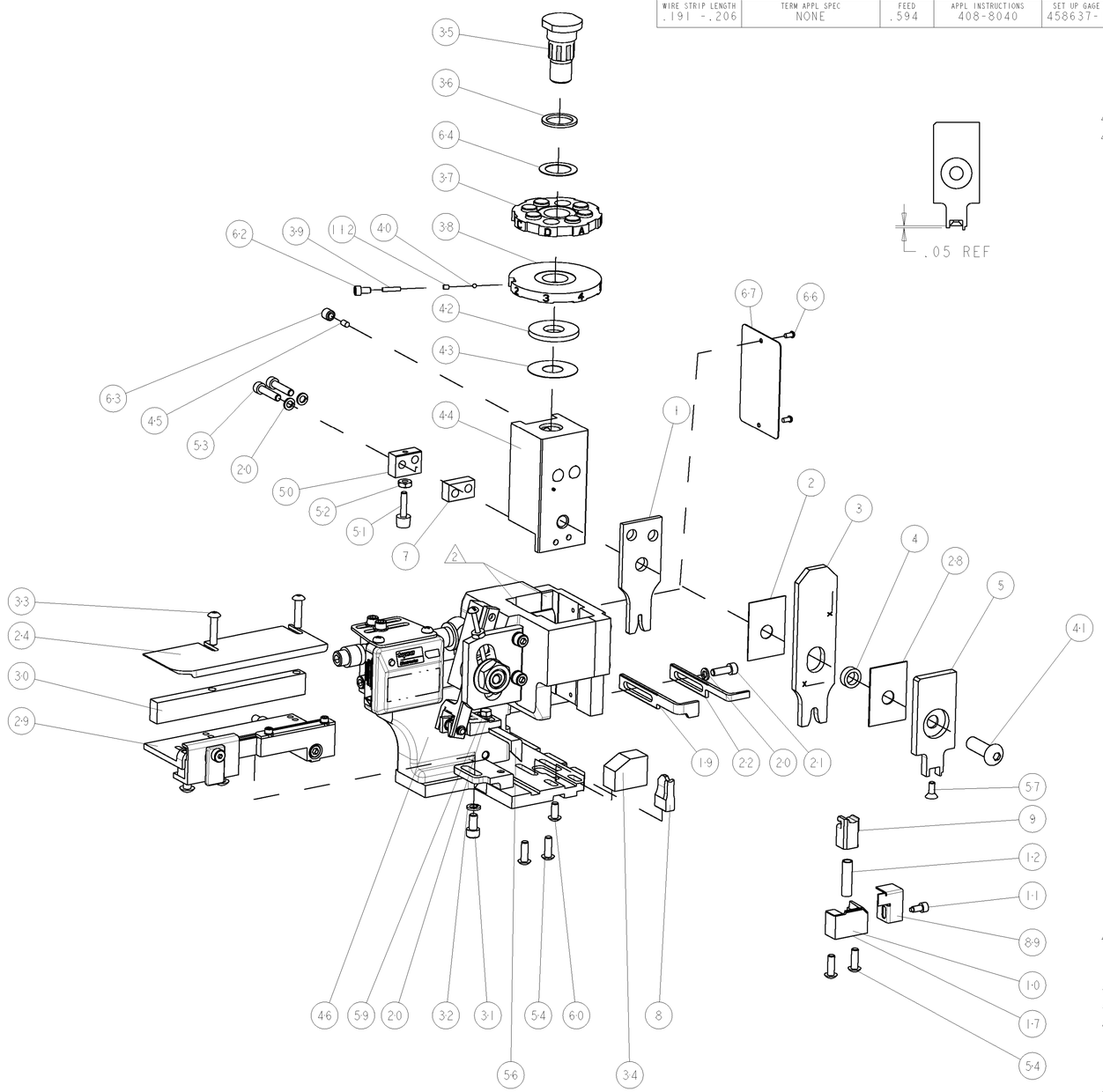


| | | | | | | | | |
|---|---|---|---|---|---|---|---|---|
| - | 2 | 2 | 2 | 2 | - | 3-354779-4 | PIN, WIRE DISC, .3160 | 128 |
| - | 2 | 2 | 2 | 2 | - | 2-354779-8 | PIN, WIRE DISC, .3130 | 127 |
| - | 2 | 2 | 2 | 2 | - | 1-354779-8 | PIN, WIRE DISC, .3080 | 126 |
| 3 | - | - | REF | - | .. | 455749-1 | GUARD WINDOW | 116 |
| 3 | - | REF | - | - | .. | 679532-1 | INSERT, GUARD | 115 |
| - | 1 | 1 | 1 | 1 | - | 690603-1 | SPRING ASSIST AMP-O-MATOR APPLICATOR | 112 |
| - | 1 | 1 | 1 | 1 | - | 1-21002-7 | SCR, BTN SKT HD CAP 6-32 X .375 | 91 |
| - | 1 | 1 | 1 | 1 | - | 318563-1 | GUARD, FRONT CHIP | 89 |
| - | 1 | 1 | 1 | 1 | - | 4088040 | SF APPL INST 408-8040 | 72 |
| - | 1 | 1 | 1 | 1 | - | 217238-1 | GENERAL INSTRUCTION PKG | 71 |
| - | 1 | 1 | 1 | 1 | - | 461264-1 | PLATE, IDENTIFICATION | 67 |
| - | 2 | 2 | 2 | 2 | - | 21017-2 | SCREW, DRIVE | 66 |
| - | 1 | 1 | 1 | 1 | - | 986950-1 | WASHER, FLAT PRECISION | 64 |
| - | 1 | 1 | 1 | 1 | - | 21009-2 | SCR, SET, SELF LOCKING 1/4-20 X .250 | 63 |
| - | 1 | 1 | 1 | 1 | - | 23030-1 | SCR, SKT HD CAP 6-32 x .25 | 62 |
| - | 1 | 1 | 1 | 1 | - | 22733-8 | SCR, BHSC, SELF-LOCKING, 8-32 X .375 | 60 |
| - | 1 | 1 | 1 | 1 | - | 2-22603-0 | SCR, HEX HD CAP 8-32 X .312 | 59 |
| - | 1 | 1 | 1 | 1 | - | 1-21003-9 | SCR, FLT SKT HD CAP 6-32 X .375 | 57 |
| - | 1 | 1 | 1 | 1 | - | 458537-2 | PAWL, FEED | 56 |
| - | 4 | 4 | 4 | 4 | - | 2-21002-2 | SCR, BTN SKT HD CAP 8-32 X .500 | 54 |
| - | 2 | 2 | 2 | 2 | - | 2-21000-9 | SCR, SKT HD CAP 8-32 X .750 | 53 |
| - | 1 | 1 | 1 | 1 | - | 21018-5 | NUT, HEX, REG 6-32 | 52 |
| - | 1 | 1 | 1 | 1 | - | 811242-2 | BUMPER, HOLD DOWN | 51 |
| - | 1 | 1 | 1 | 1 | - | 690753-1 | SPACER, TONKER | 50 |
| - | - | 1 | - | - | .. | 690602-6 | CAM, PRE FEED, 1 5/8 | 49 |
| - | - | - | 1 | - | .. | 690602-5 | CAM, PRE FEED, 1 1/8 | 48 |
| - | 1 | - | - | 1 | - | 690501-4 | CAM, POST FEED, 1 5/8 | 47 |
| - | 1 | 1 | 1 | 1 | - | 459456-1 | APPL. BASIC SUB ASSY (SIDE WISE MQCA) | 46 |
| - | 1 | 1 | 1 | 1 | - | 690191-1 | PLUG,NYLON | 45 |
| - | 1 | 1 | 1 | 1 | - | 455673-1 | RAM, SIDE FEED | 44 |
| - | 1 | 1 | 1 | 1 | - | 690125-1 | SHIM SUB-ASSY | 43 |
| - | 1 | 1 | 1 | 1 | - | 690124-1 | WASHER, RAM (.115) | 42 |
| - | 1 | 1 | 1 | 1 | - | 7-21002-9 | SCR, BTN SKT HD CAP 5/16-24 X 1.00 | 41 |
| - | 1 | 1 | 1 | 1 | - | 23241-6 | BALL, STEEL | 40 |
| - | 1 | 1 | 1 | 1 | - | 690170-1 | SPRING, COMPRESSION | 39 |
| - | 1 | 1 | 1 | 1 | - | 1-690142-3 | DISC, INSULATION | 38 |
| - | 1 | 1 | 1 | 1 | - | 354777-1 | WIRE DISC, ASSEMBLY | 37 |
| - | 1 | 1 | 1 | 1 | - | 22480-5 | SPRING, COMPRESSION | 36 |
| - | 1 | 1 | 1 | 1 | - | 690212-1 | POST, RAM | 35 |
| - | 1 | 1 | 1 | 1 | - | 690786-3 | TERMINAL SUPPORT | 34 |
| - | 2 | 2 | 2 | 2 | - | 2-21002-4 | SCR, BTN SKT HD CAP 8-32 X .750 | 33 |
| - | 1 | 1 | 1 | 1 | - | 21024-5 | WASHER, SPRG LOCK, REG NO 10 | 32 |
| - | 1 | 1 | 1 | 1 | - | 3-21000-4 | SCR, SKT HD CAP 10-32 X .375 | 31 |
| - | 1 | 1 | 1 | 1 | - | 1320908-6 | SPACER, STRIP GUIDE | 30 |
| - | 1 | 1 | 1 | 1 | - | 1633091-1 | SUB-ASSEMBLY, FEEDTRACK | 29 |
| - | 1 | 1 | 1 | 1 | - | 455888-7 | SPACER, CRIMPER | 28 |
| - | 1 | 1 | 1 | 1 | - | 1320928-3 | PLATE, STRIP GUIDE | 24 |
| - | 1 | - | - | 1 | - | 690472-2 | STRIPPER | 22 |
| - | 1 | 1 | 1 | 1 | - | 2-21000-7 | SCR, SKT HD CAP 8-32 X .500 | 21 |
| - | 4 | 4 | 4 | 4 | - | 21024-4 | WASHER, SPRG LOCK, REG NO 8 | 20 |
| - | - | 1 | 1 | - | - | 691353-1 | STRIPPER | 19 |
| 1 | - | 1 | - | - | - | 679625-2 | SHEAR HOLDER, FRONT (NO CUT) | 17 |
| - | 1 | 1 | 1 | 1 | - | 3-22280-3 | SPRING, COMPRESSION | 12 |
| - | 1 | 1 | 1 | 1 | - | 690461-2 | STOP, SHEAR | 11 |
| 1 | - | 1 | 1 | 1 | - | 1-690459-0 | SHEAR HOLDER, FRONT | 10 |
| 1 | - | 1 | 1 | 1 | - | 318707-1 | FLOATING SHEAR, FRONT | 9 |
| 1 | 1 | 1 | 1 | 1 | - | 1633110-7 | ANVIL, COMBINATION .090 | 8 |
| - | 1 | 1 | 1 | 1 | - | 1-240641-5 | SPACER | 7 |
| - | 1 | 1 | 1 | 1 | - | 318701-1 | DEPRESSOR, SHEAR | 5 |
| - | 1 | 1 | 1 | 1 | - | 2-238011-7 | BLOCK, CRIMPER SPACER | 4 |
| 1 | 1 | 1 | 1 | 1 | - | 7-683454-5 | CRIMPER, INSULATION 0 | 3 |
| - | 1 | 1 | 1 | 1 | - | 455888-4 | SPACER, CRIMPER | 2 |
| 1 | 1 | 1 | 1 | 1 | - | 2-456406-2 | CRIMPER, WIRE PREMIUM | 1 |
| -77 | -6 | -3 | -2 | -1 | U/M | PART NO | DESCRIPTION | ITEM NO |

POST-FEED 1 5/8 STROKE | PRE-FEED 1 1/8 STROKE | PRE-FEED 1 5/8 STROKE

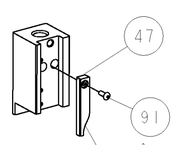


-1 & -6

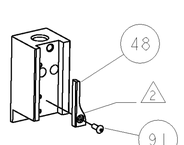


-2

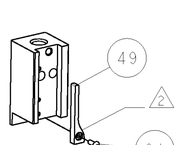


-3

THIS DRAWING IS A CONTROLLED DOCUMENT FOR TYCO ELECTRONICS CORPORATION. IT IS SUBJECT TO CHANGE AND THE CONTROLLING ENGINEERING ORGANIZATION SHOULD BE CONTACTED FOR THE LATEST REVISION.

DIMENSIONS: INCHES

TOLERANCES UNLESS OTHERWISE SPECIFIED:
0 PLC ±
1 PLC ±0.1
2 PLC ±0.01
3 PLC ±0.001
4 PLC ±0.0001
ANGLES ±

MATERIAL - -
FINISH - -

| | | |
|---|---|---|
| DWN | B.HIGMAN | NOV2005 |
| CHK | B.HIGMAN | NOV2005 |
| APVD | T.ELBIN | NOV2005 |

PRODUCT SPEC -
APPLICATION SPEC -
WEIGHT -

tyco Electronics — Tyco Electronics, Harrisburg, PA 17105-3608

NAME: SIDE FEED HDM APPLICATOR - -

| SIZE | CAGE CODE | DRAWING NO | RESTRICTED TO |
|---|---|---|---|
| A1 | 00779 | C-1852169 | - |

CUSTOMER DRAWING | SCALE 3:5 | SHEET 1 OF 1 | REV A

CUSTOMER VIEWABLE ASSEMBLY

# Mouser Electronics

Authorized Distributor

Click to View Pricing, Inventory, Delivery & Lifecycle Information:

TE Connectivity:

1852169-2