DRAWING MADE IN THIRD ANGLE PROJECTION

/home/us024474/newdesign

PART NUMBER	REV	FIRST USED
1852236-1	A	122500-1
1852236-2	A	565435-5
1852236-3	A	354500-1

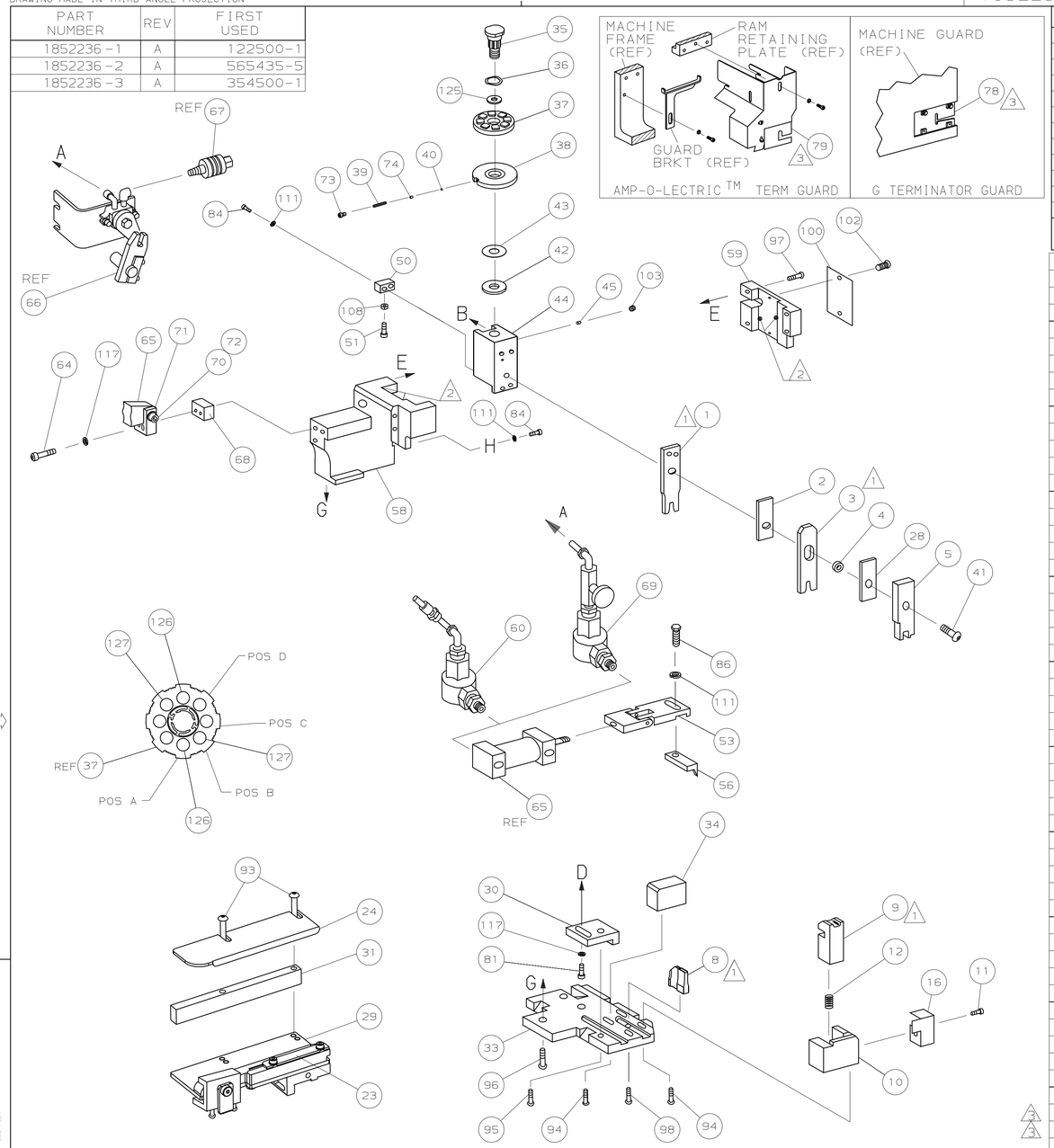

TERMINAL NAME: FASTON

AMP TERM PN	MFR TERM PN
1949012	F65B-14474-1-HA

FORD TERMINAL FORD CRIMP SPECS		
PAD LTR	CRIMP HEIGHT	WIRE SIZE
A	.082 ±.002 [2.08 ±0.05mm]	14
B	.075 ±.002 [1.91 ±0.05mm]	16
C	NOT	USED
D	NOT	USED

CRIMP	SIZE	TYPE	RANGE
WIRE	.140 [3.56mm]	F	14-16 AWG
INSUL	.150 [3.81mm]	O	Ø.140 MAX

WIRE STRIP LENGTH	TERM APPL SPEC	FEED	APPL INSTRUCTION	SET UP GAGE	LAYOUT
.188-.203	NONE	1.180	408-8040	458637-1	L1852236

-1	-2	-3	U/M	DWG SIZE	PART NO	DESCRIPTION	ITEM NO
							129
							128
2	2	2	-	C	8-354778-8	PIN, WIRE DISC (.2935)B	127
2	2	2	-	C	7-354778-2	PIN, WIRE DISC (.2855)A	126
1	1	1	-	A	986950-1	WASHER, FLAT PRECISION	125
1	1	1	-	A	217238-1	GENERAL INSTRUCTION PACKAGE	124
1	1	1	-	-	4088040	SF APPL INST 408-8040	123
							122
							121
							120
							119
							118
3	3	3	-	A	21024-5	WASHER, LOCK(#10)ADJ BLOCK	117
							116
							115
							114
							113
							112
4	4	4	-	A	21024-4	WASHER,LOCK(#8)STRIPPER	111
							110
							109
1	1	1	-	A	21018-5	NUT,HEX(NO.6)HOLDDOWN	108
							107
							106
							105
							104
1	1	1	-	A	21009-2	SCR,SKT SET(1/4-20x.25 LW)RAM	103
2	2	2	-	A	21017-2	SCR,DRIVE(#2x.19)ID PLATE	102
							101
1	1	1	-	B	461264-1	PLATE, IDENTIFICATION	100
							99
1	1	1	-	A	22733-8	SCR,BHC(8-32x.38 LW)ANVIL	98
4	4	4	-	A	2-21002-9	SCR,BHC(10-32x.75)CAP	97
3	3	3	-	A	2-22733-8	SCR,BHC(1/4-20x.62)HSG	96
1	1	1	-	A	2-21002-7	SCR,BHC(10-32x.50)SG ADJ BLK	95
4	4	4	-	A	2-21002-2	SCR,BHC(8-32x.50)TERM H DWN	94
2	2	2	-	A	2-21002-4	SCR,BHC(8-32x.75)R STP GDE	93
							92
							91
							90
							89
							88
							87
1	1	1	-	A	2-22603-0	SCR,HEX HD(8-32x.25)FEED FINGER	86
							85
3	3	3	-	A	2-21000-7	SCR,SHC(8-32x.50)STRIPPER	84
							83
							82
1	1	1	-	A	3-21000-4	SCR,SHC(10-32x.38)SG ADJ BL	81
							80
-	1	-	-	B	462992-7	GUARD ASSY	79
REF	-	-	-	B	679532-1	INSERT, GUARD	78
							77
							76
							75
1	1	1	-	A	690603-1	SPRING, ASSIST	74
1	1	1	-	A	23030-1	SCR,SHC(6-32x.25 SL)INS DISC	73
1	1	1	-	A	3-21001-5	SCR,SHC(3/8-16X1.00)AIR FEED	72
1	1	1	-	B	459610-1	MOUNT, FEED BRACKET	71
-3	-2	-1	U/M	DWG SIZE	PART NO	DESCRIPTION	ITEM NO

QTY REQD PER ASSY — PARTS LIST

-1	-2	-3	U/M	DWG SIZE	PART NO	DESCRIPTION	ITEM NO
LEADMAKER	BENCH MODEL K	BENCH MODEL G			AIRFEED	AIRFEED	AIRFEED
1	1	1	-	A	21024-8	WASHER, LOCK 3/8	70
-	1	-	-	C	692655-5	AIR FEED VALVE ASSY	69
1	1	1	-	A	461690-1	SPACER, AIR FEED	68
-	REF	-	-	A	24042-2	VALVE, SHUT OFF	67
-	REF	-	-	C	692655-6	AIR FEED VALVE ASSY	66
1	1	1	-	B	461065-2	AIR FEED ASSY (2 INCH)	65
2	2	2	-	A	4-21000-3	SCR,SHC(10-32x2.00)AIR ASSY	64
1	-	1	-	A	980285-2	ELBOW, SWIVEL 1/8 NPT - 1/4 T	63
							62
							61
1	-	1	-	C	692655-7	AIR FEED VALVE ASSY	60
1	1	1	-	C	454220-1	CAP, RAM	59
1	1	1	-	D	454485-1	HOUSING	58
							57
1	1	1	-	B	458537-2	PAWL, FEED	56
							55
							54
1	1	1	-	B	461062-1	FEED FINGER ASSY	53
							52
1	1	1	-	A	811242-2	BUMPER, HOLDDOWN	51
1	1	1	-	A	690753-1	SPACER, TONKER	50
							49
							48
							47
							46
1	1	1	-	A	690191-1	PLUG, NYLON	45
1	1	1	-	C	455673-1	RAM	44
1	1	1	-	A	690125-1	WASHER, LAMINATED	43
1	1	1	-	A	690124-1	WASHER, RAM	42
1	1	1	-	A	7-21002-9	BOLT, CRIMPER(5/16x1.00)	41
1	1	1	-	A	23241-6	BALL, STEEL	40
1	1	1	-	A	690170-1	SPRING, COMPRESSION	39
1	1	1	-	C	690142-1	DISC, INSULATION	38
1	1	1	-	D	354777-1	DISC, WIRE	37
1	1	1	-	A	22480-5	WASHER, SPRING	36
1	1	1	-	B	690212-1	POST, RAM	35
1	1	1	-	B	690786-6	SUPPORT, TERMINAL	34
1	1	1	-	D	455675-1	PLATE, BASE	33
							32
1	1	1	-	D	1320908-3	GUIDE, STRIP (REAR)	31
1	1	1	-	B	455689-1	BLOCK, STRIP GUIDE ADJ	30
1	1	1	-	C	1633091-2	PLATE, STRIP GUIDE	29
1	1	1	-	C	1-455888-0	SPACER, FRONT SHEAR DEP	28
							27
							26
							25
1	1	1	-	D	1320928-2	GUIDE, STRIP (REAR)	24
1	1	1	-	B	1-690438-0	GUIDE, STRIP (FRONT)	23
-	-	1	-	B	690472-2	STRIPPER	22
							21
							20
1	1	-	-	B	691353-1	STRIPPER	19
							18
							17
1	1	1	-	B	318563-1	GUARD, CHIP, FRONT	16
							15
							14
							13
1	1	1	-	A	3-22280-3	SPRING, SHEAR	12
1	1	1	-	B	690461-1	STOP, SHEAR	11
1	1	1	-	C	690459-1	HOLDER, SHEAR (FRONT)	10
1	1	1	-	C	1-454276-9	SHEAR, FLOAT (FRONT)	9
1	1	1	-	C	1633115-5	ANVIL	8
							7
							6
1	1	1	-	C	1-455889-4	DEPRESSOR, SHEAR (FRONT)	5
1	1	1	-	B	238011-2	SPACER, BLOCK CRIMPER	4
1	1	1	-	C	1-904741-3	CRIMPER, INSULATION	3
1	1	1	-	C	455888-5	SPACER, CRIMPER	2
1	1	1	-	C	2-456411-2	CRIMPER, WIRE	1
-3	-2	-1	U/M	DWG SIZE	PART NO	DESCRIPTION	ITEM NO

REVISION OF EACH ASSY NO (WHEN BLANK, USE DWG REVISION)

QTY REQD PER ASSY — PARTS LIST

1. RECOMMENDED SPARE PARTS.
2. GREASE LIGHTLY.
3. GUARD MUST BE IN PLACE WHEN OPERATING APPLICATOR IN A BENCH MACHINE.
4. SEE DRAWING FOR COMPONENTS

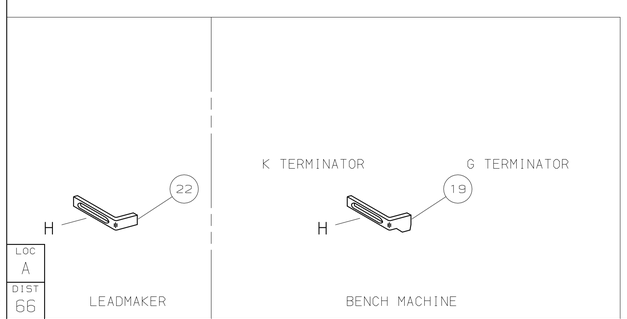

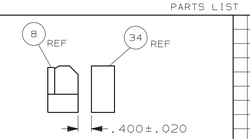

ITEM 34 LOCATION

P	F	LTR	REVISION RECORD	APP	DATE
		A	RELEASED	RK	APR06

DIMENSIONS IN INCHES. DO NOT SCALE PRINT. TOLERANCES UNLESS OTHERWISE SPECIFIED: 2 PLC DEC ±.25, 3 PLC DEC ±-, 4 PLC DEC ±-, ANGLES ±-, SURF TEXTURE, √. REMOVE BURRS, BREAK SHARP EDGES R.015 MAX

MATL –	HT TR –	FIN –	
DR 06APR06 C.REICHELDERFER	APP 06APR06 T.ELBIN	AMP Tyco Electronics Harrisburg, PA 17105-3608	
CHK 28APR06 G.BAILEY	REL 28APR06 R.KNEPPER		
NAME SIDE FEED HDM APPLICATOR		MACHINE REF MINI APPL	
SCALE –	D	DWG NO 1852236	SHEET 1 OF 1 REV A
CAGE CODE 00779	CUSTOMER AND ASSEMBLY DRAWING		RESTRICTED TO –

THIS DRAWING IS A CONTROLLED DOCUMENT.
RELEASED FOR PUBLICATION APRIL 28, 2006
© COPYRIGHT 2006 BY AMP INCORPORATED. ALL RIGHTS RESERVED.

Mouser Electronics

Authorized Distributor

Click to View Pricing, Inventory, Delivery & Lifecycle Information:

TE Connectivity:

1852236-2