THIS DRAWING IS UNPUBLISHED. RELEASED FOR PUBLICATION – ,– .
© COPYRIGHT – By – ALL RIGHTS RESERVED.

LOC	DIST
FT	0

REVISIONS

P	LTR	DESCRIPTION	DATE	DWN	APVD
	D1	REVISED PER ECO–11–004820	11MAR11	RK	HMR

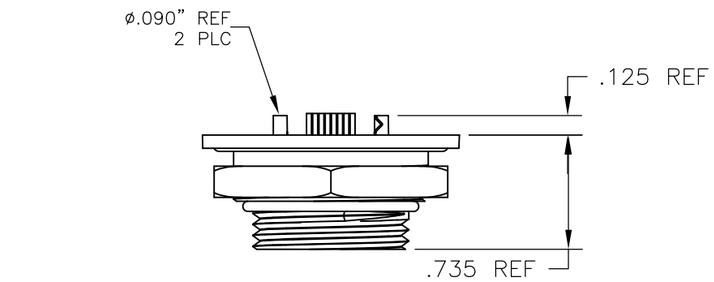

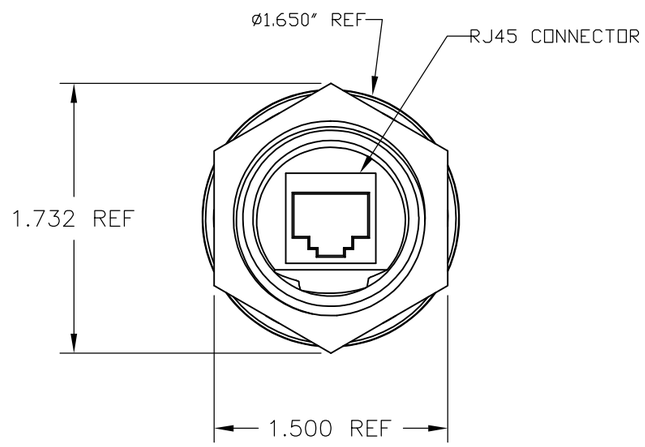

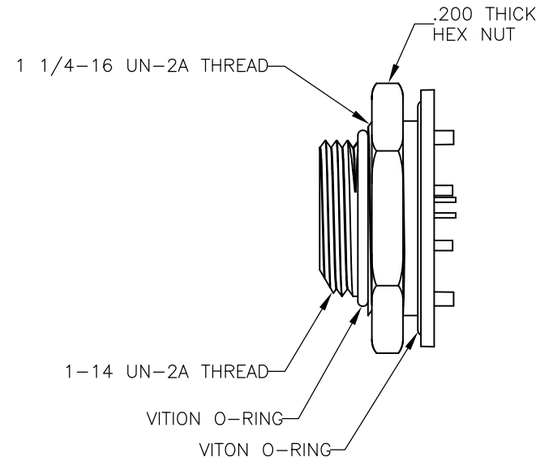

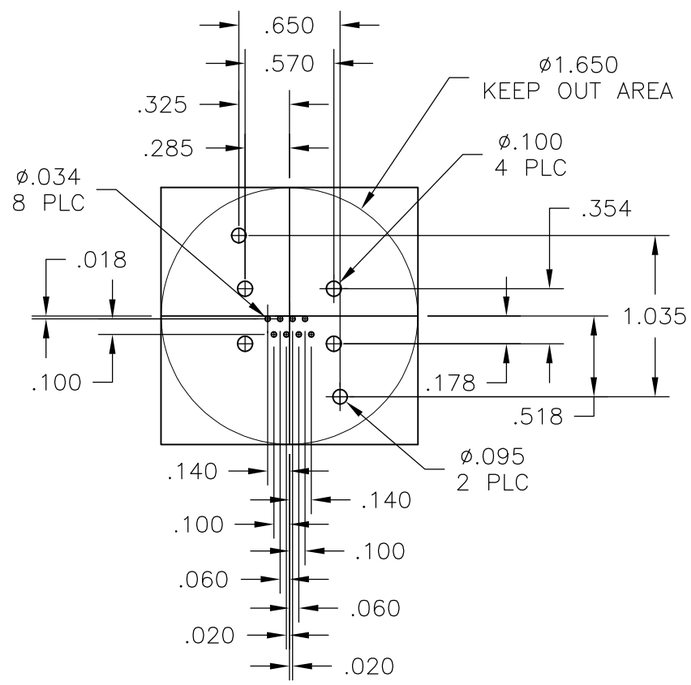

RECOMMENDED PCB LAYOUT

SUPERSEDED	1–1546405–1
	1546405–1
	PART NO.

THIS DRAWING IS A CONTROLLED DOCUMENT.

DIMENSIONS: INCHES

TOLERANCES UNLESS OTHERWISE SPECIFIED:

0 PLC	± –
1 PLC	± –
2 PLC	± .02
3 PLC	± .005
4 PLC	± –
ANGLES	± 2°

MATERIAL –

FINISH –

DWN	S SCHLEGEL 09OCT2002
CHK	H WAKEEM 10/9/02
APVD	H WAKEEM 10/9/02
PRODUCT SPEC	—
APPLICATION SPEC	—
WEIGHT	—

TE Connectivity

NAME

DIRECT PCB MOUNT 8 PIN THROUGH HOLE RECEPTACLE, FRONT COUPLING NUT

–

SIZE	CAGE CODE	DRAWING NO	RESTRICTED TO
A3	00779	C–1546405	—

CUSTOMER DRAWING

SCALE	SHEET	REV
NTS	1 OF 1	D1