THIS DRAWING IS UNPUBLISHED. RELEASED FOR PUBLICATION -,- .
© COPYRIGHT - BY TYCO ELECTRONICS CORPORATION. ALL RIGHTS RESERVED.

LOC	DIST
DW	—

REVISIONS

P	LTR	DESCRIPTION	DATE	DWN	APVD
	A	RELEASED	21JAN08	AW	WK

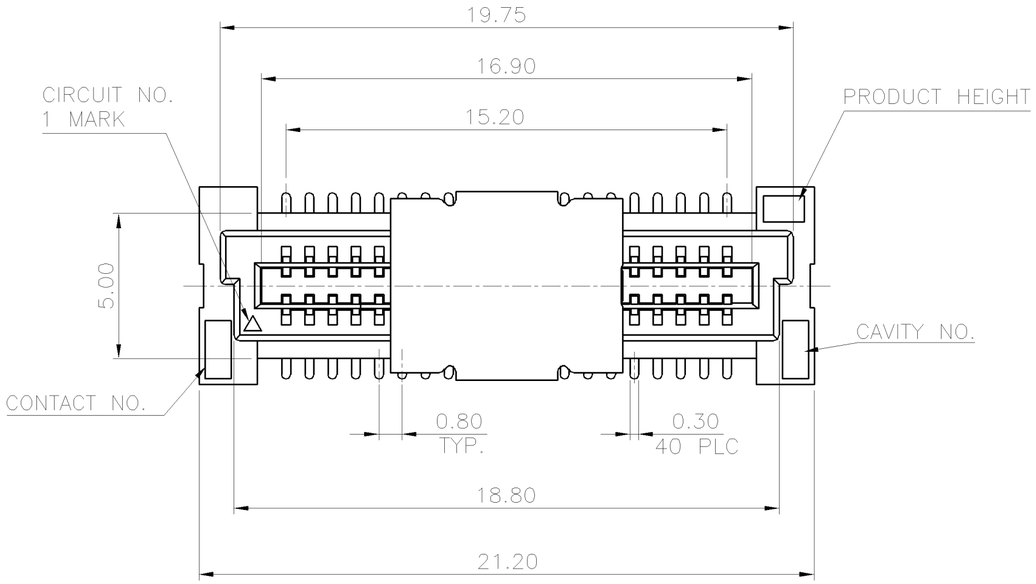

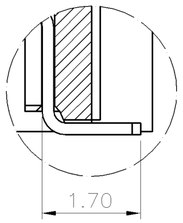

DETIAL A
2:1

NOTE:

1. MATERIAL:
   HOUSING: LCP WITH 30% GF, UL 94V-0, NATURAL COLOR.
   CONTACT: PHOSPHOR BRONZE.
   CAP: BRASS.

2. FINISH:
   CONTACT: GOLD FLASH PLATED ON CONTACT AREA, 2.54μm [100μ"] MIN. MATTE-TIN ON SOLDER TAIL, WITH ENTIRE CONTACT UNDERPLATED 1.27μm [50μ"] MIN.NICKEL.
   CAP: 0.762μm [30μ"] MIN. NICKEL.

3. REFLOW SOLDER CAPABLE TO 260°C PER 109-201, CONDITION B.

4. RECOMMENDED RECEPTACLE P/N: 1775876-2

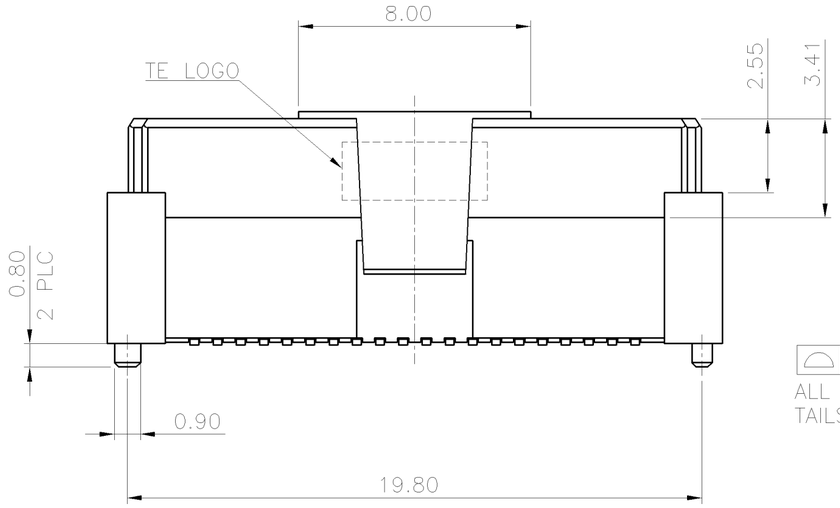

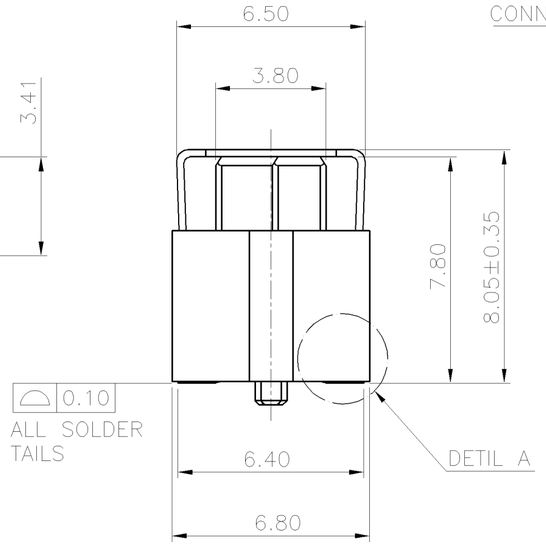

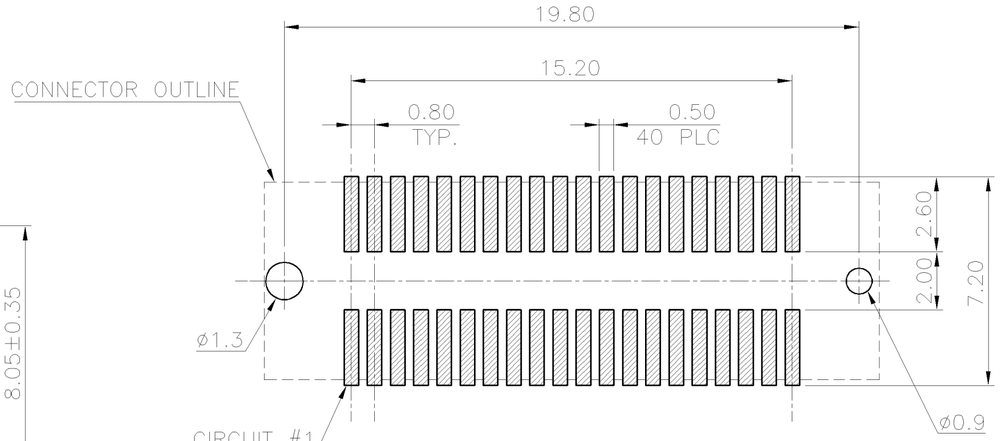

RECOMMENDED P.C.B. LAYOUT
(TOLERANCE: ±0.05)

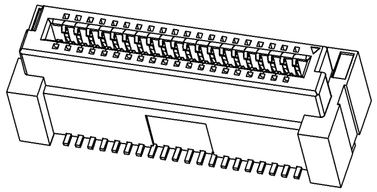

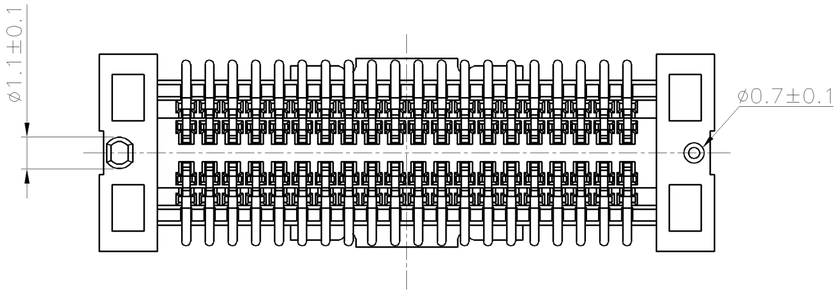

40	1775729-1
NO. OF CONTACTS	PART NUMBER

THIS DRAWING IS A CONTROLLED DOCUMENT.

DIMENSIONS: MM

TOLERANCES UNLESS OTHERWISE SPECIFIED:

0 PLC	± -
1 PLC	± 0.25
2 PLC	± 0.2
3 PLC	± -
4 PLC	± -
ANGLES	± -

MATERIAL: SEE NOTE

FINISH: SEE NOTE

DWN	A. WU	21JAN2008
CHK	S. HOU	21JAN2008
APVD	W. KODAMA	21JAN2008

PRODUCT SPEC: 108-57610

QUALIFICATION TEST REPORT: 501-57709

WEIGHT: 1.25 GRAMS

Tyco Electronics — Tyco Electronics Corporation, Taipei, Taiwan

NAME: 0.8 mm PITCH BOARD-TO-BOARD CONNECTOR, FH, RECEPTACLE

SIZE	CAGE CODE	DRAWING NO	RESTRICTED TO
A3	00779	C-1775729	—

CUSTOMER DRAWING | SCALE — | SHEET 1 OF 2 | REV A

THIS DRAWING IS UNPUBLISHED. RELEASED FOR PUBLICATION -,- .
© COPYRIGHT - BY TYCO ELECTRONICS CORPORATION. ALL RIGHTS RESERVED.

LOC	DIST
DW	—

REVISIONS

P	LTR	DESCRIPTION	DATE	DWN	APVD
		SEE SHEET 1.			

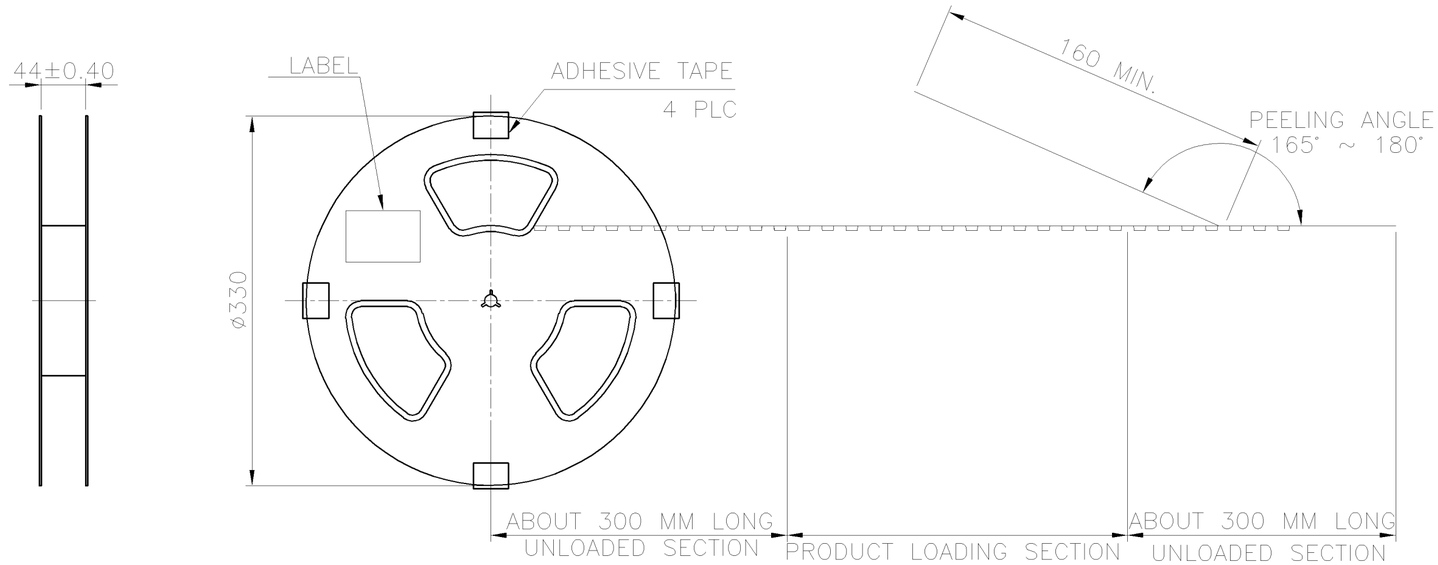

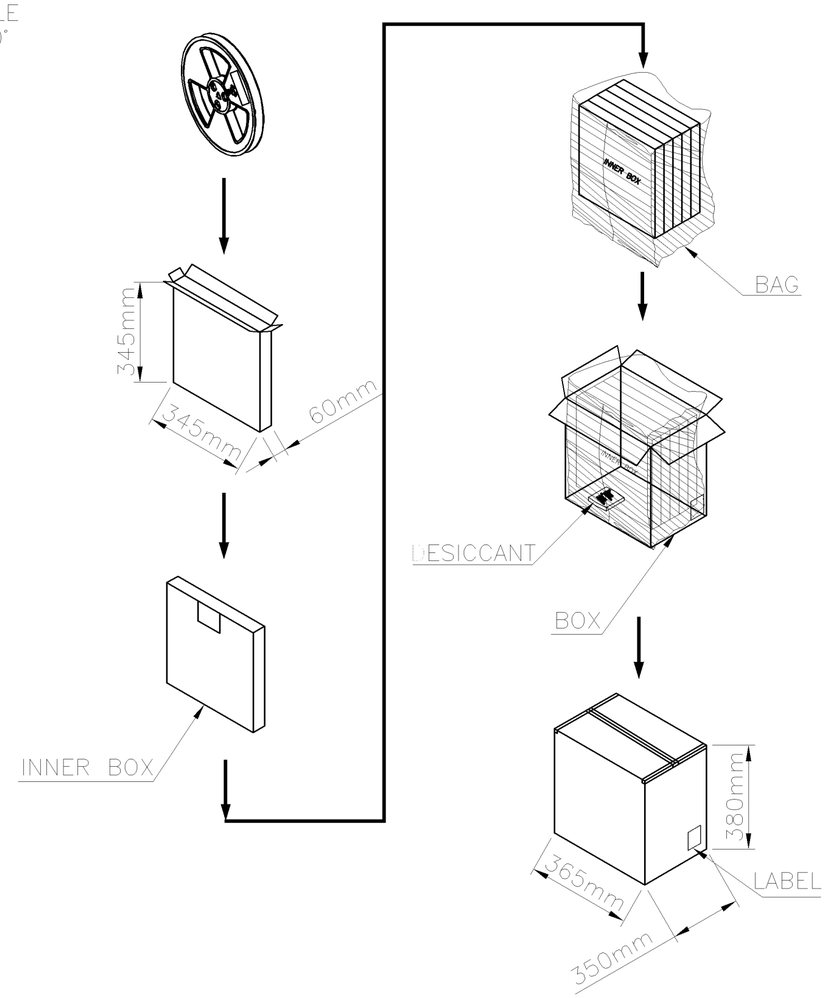

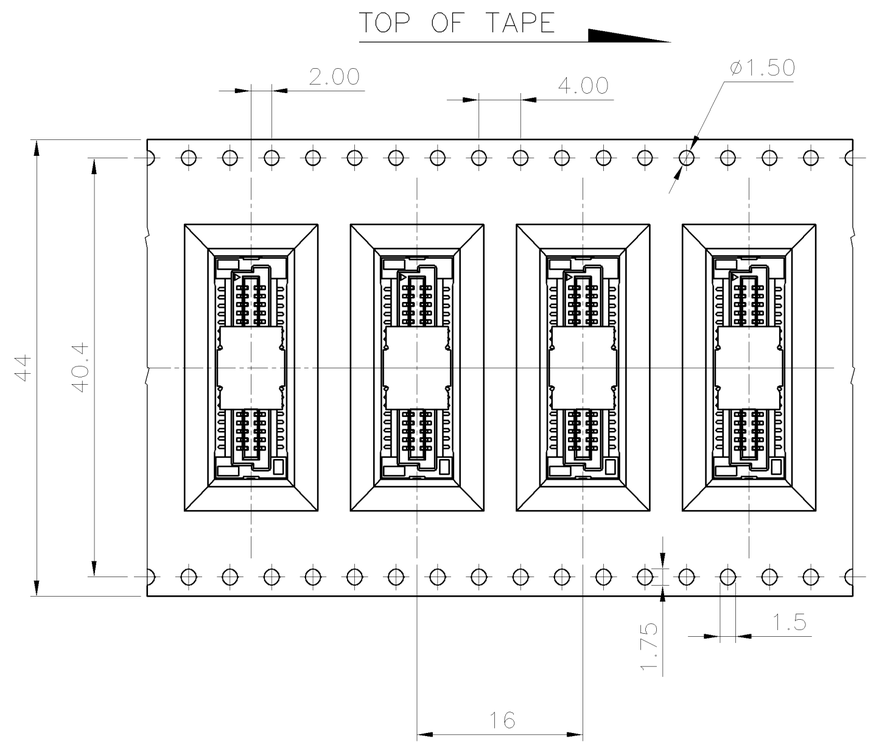

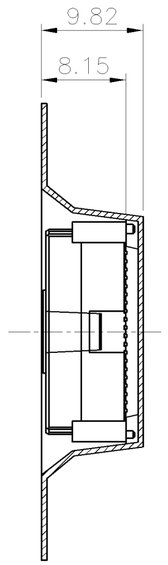

400	5	2000 PCS	4.85	2.50	40
PCS/TAPE	REEL/BOX	QUTANITY	G/W (Kg)	N/W (Kg)	NO. OF CONTACTS

THIS DRAWING IS A CONTROLLED DOCUMENT.

DIMENSIONS: MM

TOLERANCES UNLESS OTHERWISE SPECIFIED:
0 PLC ± –
1 PLC ± –
2 PLC ± –
3 PLC ± –
4 PLC ± –
ANGLES ± –

MATERIAL –

FINISH –

DWN A. WU 21JAN2008
CHK S. HOU 21JAN2008
APVD W. KODAMA 21JAN2008

PRODUCT SPEC —

APPLICATION SPEC —

WEIGHT —

CUSTOMER DRAWING

Tyco Electronics

Tyco Electronics Corporation
Taipei, Taiwan

NAME
0.8 mm PITCH BOARD–TO–BOARD CONNECTOR, FH, RECEPTACLE

SIZE	CAGE CODE	DRAWING NO	RESTRICTED TO
A3	00779	C-1775729	—

SCALE	SHEET	REV
—	2 OF 2	A