THIS DRAWING IS UNPUBLISHED. RELEASED FOR PUBLICATION 1997
© COPYRIGHT 1997 ALL RIGHTS RESERVED.

LOC	DIST
A1	

REVISIONS

P	LTR	DESCRIPTION	DATE	DWN	APVD
	B9	ECR-14-004462	05APR2014	RK	MKO
	C	ECR-15-015728	19APR2016	GCM	JB

NOTES

1 Material: Housing aluminium diecasting alloy
Seals: Neoprene ; Viton

2 Surface: Varnish Grey: Black

3 Varnish on the inside not necessary

4 Packaging quantity 5 pieces

5 Packaging quantity 100 pieces

6 Packaging quantity 150 pieces

7 Only valied for PN 0-1:
couding device beveled on dimension 82

8 Only valied for PN 0-4 and 0-5
Plat form beveled on dimension 72.5+0.1 both sides

9 Only valied for PN 0-2
Seal loose attached

10 Only valied for PN 0-3:
flange seal clued on

11 Special side clip for Mitsubishi
powder coating for housing ; 120-160 µm

PN 1-1.7-1.2-1.6-1.0-2.0-4 & 0-9

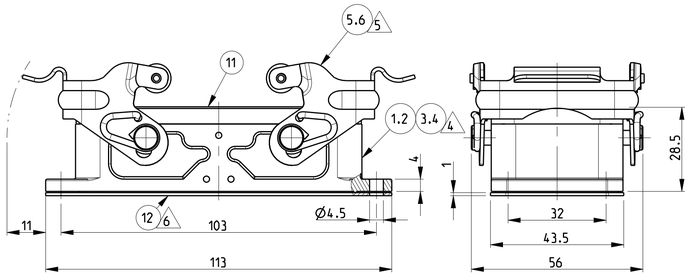

PN 1-3

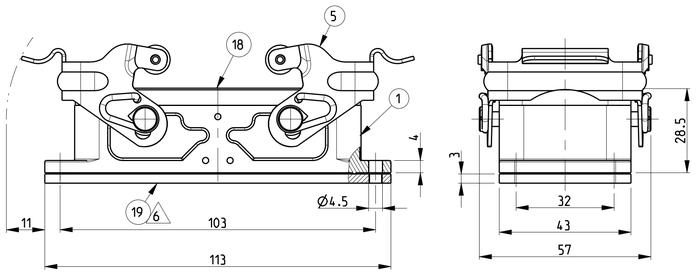

PN 1-2.2-2.0-5.0-7.0-8 & 1-4

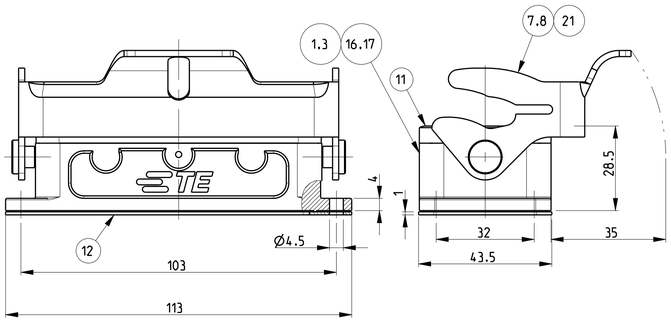

PN 1-8 & 2-8

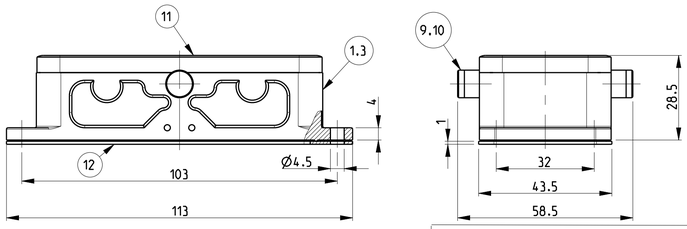

11 Special bow . double powder thick layer

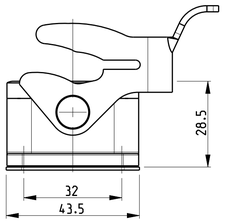

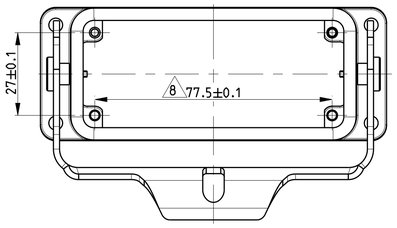

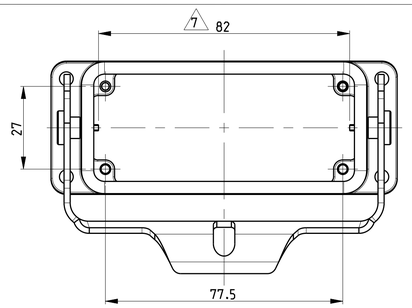

PN 0-6

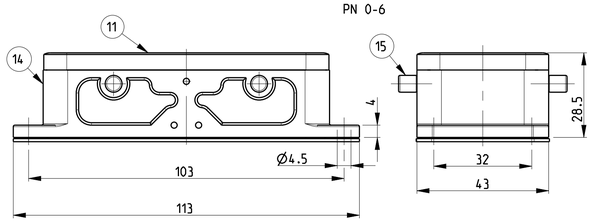

PN 1-5
With diecast bolt

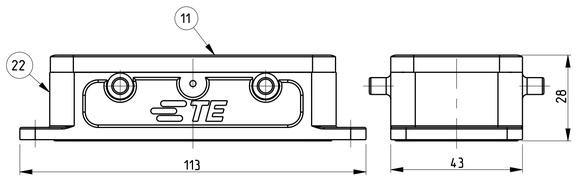

PN 1-0

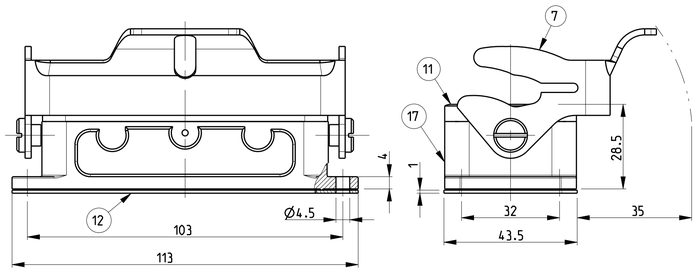

Panel cut-out

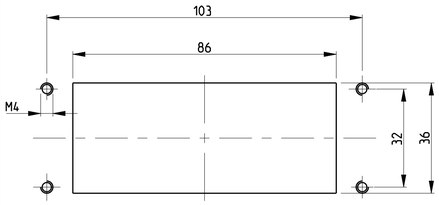

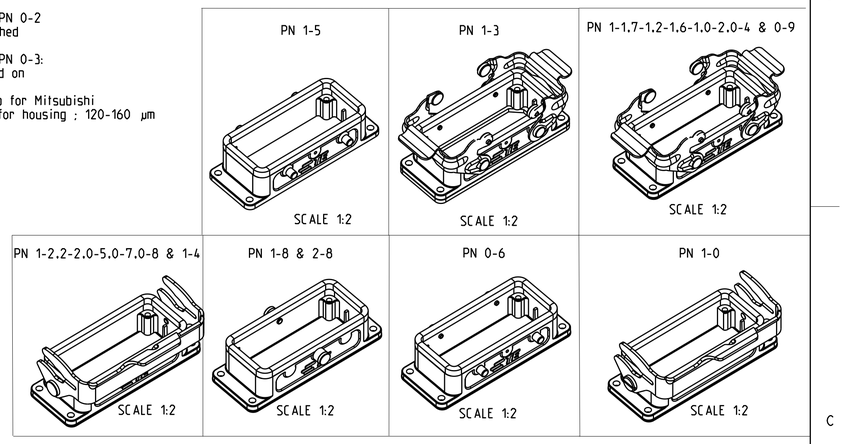

1-6	1-5	1-4	1-3	1-0	0-9	0-8	0-7	0-6	0-5	0-4	0-3	0-2	0-1	6-1	8-1	2-8	1-8	2-2	1-2	2-1	7-1	1-1	DESCRIPTION	MATERIAL	SURFACE	COLOR	ITEM NO	NOTES
																							Surface mounted housing bottom entry HB	Aluminium		Grey RAL7001	22	With bolt
		1																					LB-Side clip	Steel	Zinc plated	Blue	21	
		1																					Surface mounted housing bottom entry HB	Aluminium		Grey 120-160 µm	20	
1			1		1																		Flange seal	Viton		Black	19	
1			1		1																		Profile seal	Viton		Grey	18	
1		1		1																			Surface mounted housing bottom entry HB	Aluminium		Grey RAL7001	17	Neutral
							1																Surface mounted housing bottom entry HB	Aluminium		Grey RAL7001	16	Without lo
								4															Clip bolt-HB	Steel	Zinc plated	Blue	15	
								1															Surface mounted housing bottom entry HB	Aluminium		Grey RAL7001	14	
																											13	
		1		1		1	1	1	1	1	1	1	1	1	1	1	1	1	1	1	1	1	Flange seal	Neoprene		Black	12	
	1	1		1		1	1	1	1	1	1	1	1	1	1	1	1	1	1	1	1	1	Profile seal	Neoprene		Black	11	
																2							ZB-Clip bolt	Stainless steel			10	
													2				2						ZB-Clip bolt	Steel	Zinc plated	Blue	9	
																		1					LB-Side clip	Stainless steel			8	
									1										1				LB-Side clip	Steel	Zinc plated	Blue	7	
1				1		1	1							2						2			VS-Locking clip	Stainless steel			6	
			2		2						2	2									2	2	VS-Locking clip	Steel	Zinc plated	Blue	5	
												1											Surface mounted housing bottom entry HB	Aluminium		With out varnish	4	
									1	1						1		1		1			Surface mounted housing bottom entry HB-K	Aluminium	Aluminium oxide	Black RAL9005	3	
																						1	Surface mounted housing bottom entry HB-K	Aluminium		Black RAL9005	2	
			1		1	1					1		1	1			1		1			1	Surface mounted housing bottom entry HB	Aluminium		Grey RAL7001	1	
4	5	4	4	4	5	5	4	4	8	8	4	9	7	4	4	4	4	4	4	4	4	4	ORDERING TEXT					
		11																					HB.16.AG-VS					
																							HB.16.AG-VS					
																							HB-K.16.AG-VS					
																							HB.16.AG-LB					
																							HB-K.16.AG-LB					
																							HB-Z.16.AG-ZVGR					
																							HB-K/Z.16.AG-ZV					
																							~~HB.16.AG-LB~~					
																							HB.16.AG-VS					
																							~~HB-Z.16.AG-ZVGR~~					
																							HB.16.AG-VS					
																							~~HB.16.AG-VS~~					
																							HB-K.16.AG-VS					
																							HB-K.16.AG-LB					
																							HB.16.AG					
																							HB.16.AG-LB					
																							HB.16.AG-LB.KM					
																							HB.16.AG-VS.KM					
																							HB.16.AG-LB					
																							HB.16.AG-VS.V					
																							~~HB.16.AG-LB~~					
																							HB.16.AG-F					
																							HB.16.AG-LB					

THIS DRAWING IS A CONTROLLED DOCUMENT.

DIMENSIONS: mm

TOLERANCES UNLESS OTHERWISE SPECIFIED: ISO 9692 ISO 2768-mK ISO 2768-mH-L ISO 8015-120

0 PLC ±
1 PLC ±
2 PLC ±
3 PLC ±
4 PLC ±
ANGLES ±

MATERIAL

FINISH

DWN Schweiger 23.07.1997
CHK Kramer 23.06.1998
APVD -

PRODUCT SPEC 108-74001/74003
APPLICATION SPEC 114-74001/74004/74005
WEIGHT

TE Connectivity

NAME Surface Mounted housing Bottom Entry HB.16

SIZE	CAGE CODE	DRAWING NO	RESTRICTED TO
A1	00779	C-1102296	

CUSTOMER DRAWING

SCALE 1:1 SHEET 1 OF 1 REV C

4805 (3/11)

Mouser Electronics

Authorized Distributor

Click to View Pricing, Inventory, Delivery & Lifecycle Information:

TE Connectivity:

1-1102296-8