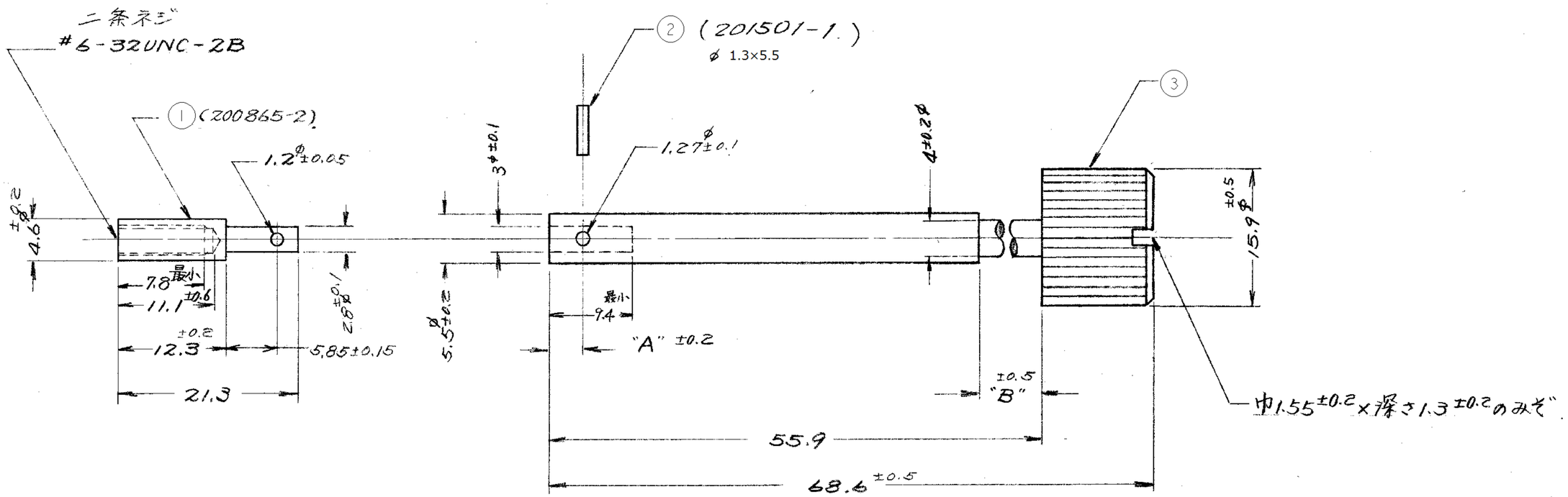

注 1. 使用時の適用回転トルクの値 12kg-cm 最大

(-1: 類似NO. 202644-3)

7-3	7-2	7-1	-3	-2	-1	"A"	"B"	MATERIAL&FINISH	NAME	ITEM
PART NO.										
1	-	-	-	-	-	1.8	7.2	BRASS, Ni PLATED	JACK-SCREW BODY	③
-	1	-	-	-	-	2.6	26.0	BRASS, Ni PLATED	JACK-SCREW BODY	③
-	-	-	-	-	-	3.65	7.2	BRASS, Ni PLATED	JACK-SCREW BODY	③
-	-	-	1	-	-	1.8	7.2	BRASS, TIN PLATED	JACK-SCREW BODY	③
-	-	-	-	-	-	2.6	26.0	BRASS, TIN PLATED	JACK-SCREW BODY	③
-	-	-	-	-	1	3.65	7.2	BRASS, TIN PLATED	JACK-SCREW BODY	③
1	1		1		1	-	-	STAINLESS STELL ORGANIC COATING	JACK-SCREW PIN	②
1	1		1		1	-	-	STAINLESS STELL ORGANIC COATING	JACK-SCREW TIP	①
QTY										

TABLE I

LTR.	変更 (REVISION RECORD)	DR.	CHK.	DATE
G	REVISED PER ECR-17-004338	C.L	N.Y	20APR17
F	REVISD	T.N	N.Y	16APR 2013
E	ADDED-3 ECN J82-6768	H.O	H.O	10/5/82
D	ADDED-2 (P-DWG REV. A)	N.O	none	4/6/78
C	ECN J6-3956	H.A	N.O	9/10/76
B2	ADDED NOTE 1	H.S	N.O	3/4/75
B1	202644-3 WAS 202644-2 (P-DWG REV. 0)	[illegible]	N.O	5/8/73
B	REVISED (P-DWG REV. 0)	[illegible]	N.O	11/20/72
A	REVISED (P-DWG REV. 0)	T.R	[illegible]	8/7/72
01	REVISED (P-DWG REV. 0)	[illegible]	[illegible]	3/1/71
0	RELEASED	[illegible]	[illegible]	7/8/71

番号 (NUMBER) C-170995

組立部品 (REQUIRED PER ASSEMBLY)

記 事 (DESCRIPTION)

© COPYRIGHT 2012 BY Tyco Electronics Japan G.K.

参考図面 (CUSTOMER COPY) (REFERENCE ONLY)

TE Connectivity

材料 (MATERIAL): 上参照

仕上 (FINISH): 上参照

被覆外径 (INSULATION DIA.): — mm (IN)

適合電線断面積 (WIRE RANGE): — mm² (AWG)

分類 (CLASS): —

型式 (TYPE): —

DR. K. Kobayashi 7/9/71

CHK. M. Tanaka 8/30/71

DE.

APP. 8/9/71

一般公差 (TOLERANCE EXCEPT AS NOTED) ±0.4 ±1°0

尺度 (SCALE) 2-1

LOC J | SIZE B | 番号 (NO) C-170995 | REV. G

名称 (NAME) 可動ジャックスクリュー(小)

単位：粍 DIMENSIONS IN MM. DO NOT SCALE PRINT

AMP J 030-2

D C B A

8 7 6 5 4 3 2 1