REVISIONS				
SYM	ECO	DESCRIPTION	DATE	APPROVED
J		REVISED & REDRAWN ECO 11478 3-11-70	9/16/70	
K		003-0345-0001 was 000-0301-0029 ECO 13600	9/22/71	
L	14247	ITEM 2 000-0301-0083 was 003-0345-0001	9/17/72	
M		REV. LETTER UP-DATED ECO 16680	3/14/73	
N	29728	UPDATE DWG.	10/14/75	
P	39388	UPDATE REV. LETTER.	9/20/79	
R	43364	CLARIFY .000/.010 2 PLCS	1/5/17	AW

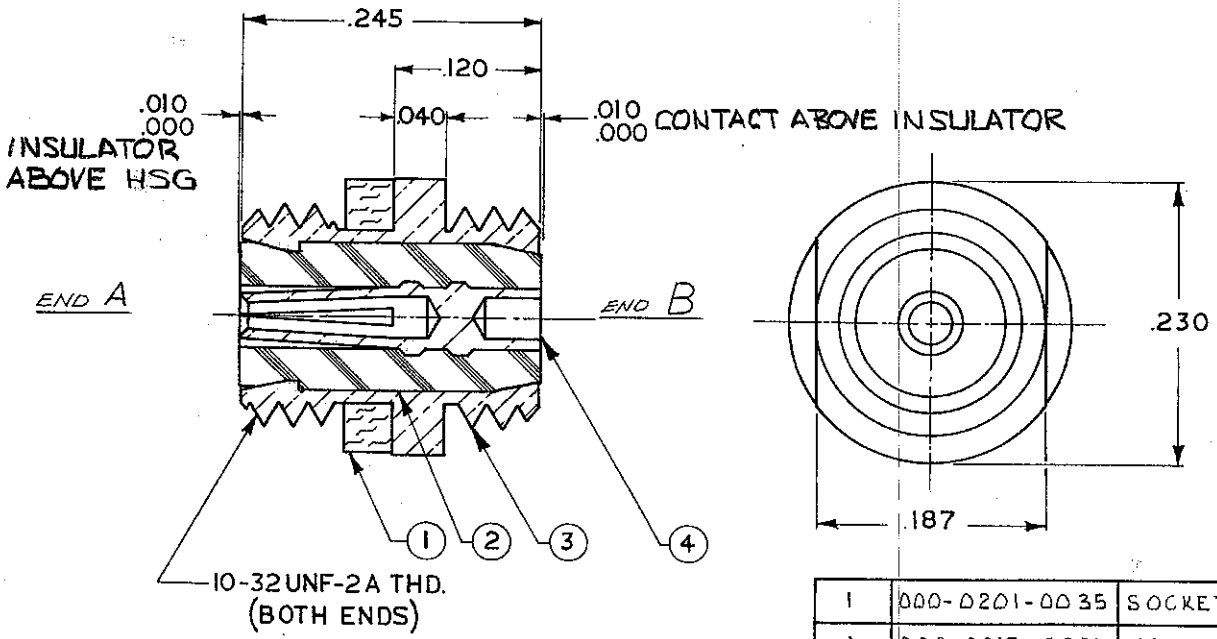

Tyco Customer Drawing 1466287

NOTES: UNLESS OTHERWISE SPECIFIED.

1. CONTACT AND INSULATOR MUST BE INSERTED SEPARATELY FROM END 'A' OF CONNECTOR.
2. HOUSING IS SILVER PLATED .0002-.0004 PER QQ-S-365 TYPE II, GRADE A.
3. SOCKET CONTACT IS GOLD PLATED PER MIL-G-45204, TYPE II, CLASS 1.
4. THIS CONNECTOR MATES WITH ALL PLUGS IN S-50 SERIES AS LISTED IN MICRODOT CATALOG.
5. INSULATION RESISTANCE 5.0×10^3 MEGOHMS MIN.
6. WORKING VOLTAGE - 750 VOLTS R.M.S.

QTY. REQD.	PART NO.	NOMENCLATURE OR DESCRIPTION	MATERIAL & SPECIFICATION	ITEM NO.
1	000-0201-0035	SOCKET CONTACT	BERYLLIUM COPPER PER QQ-C-530	4
1	003-0015-0001	HOUSING	BRASS PER QQ-B-626	3
1	000-0301-0083	INSULATOR	TEFLON PER L-P-403	2
1	003-0268-000[illegible]	GASKET	SILICONE RUBBER, ZZ-R-765	1

LIST OF MATERIAL OR PARTS LIST

TOP ASSY.

UNLESS OTHERWISE SPECIFIED
DIMENSIONS ARE IN INCHES
TOLERANCES
DECIMALS: XX± XXX±.010 XXXX± | FRACTIONS ±
ANGLES±
SURFACE TREATMENT: NOTED
DO NOT SCALE THIS DWG

DRAWN BB 1/24/53
CHECK
PR. ENG. J.K.J.
CHF. ENG
MATERIAL: NOTED
SURFACE ROUGHNESS ✓

MALCO
A MICRODOT COMPANY, INC.
220 PASADENA AVE., SO. PASADENA, CALIF. 91030

BULKHEAD RECEPTACLE

PROD CODE 931

SIZE B | CODE IDENT. NO. 98278 | 031-0003-0001 | CODE CDM

SCALE 10X | WT | SHEET 1 OF 1

CLASS 1

MICRODOT FORM NO. CCA 2086-B