THIS DRAWING IS UNPUBLISHED. RELEASED FOR PUBLICATION -,- .
© COPYRIGHT - By - ALL RIGHTS RESERVED.

REVISIONS

P	LTR	DESCRIPTION	DATE	DWN	APVD
	P4	REVISED PER ECO-15-016493	26NOV2015	NK	DR

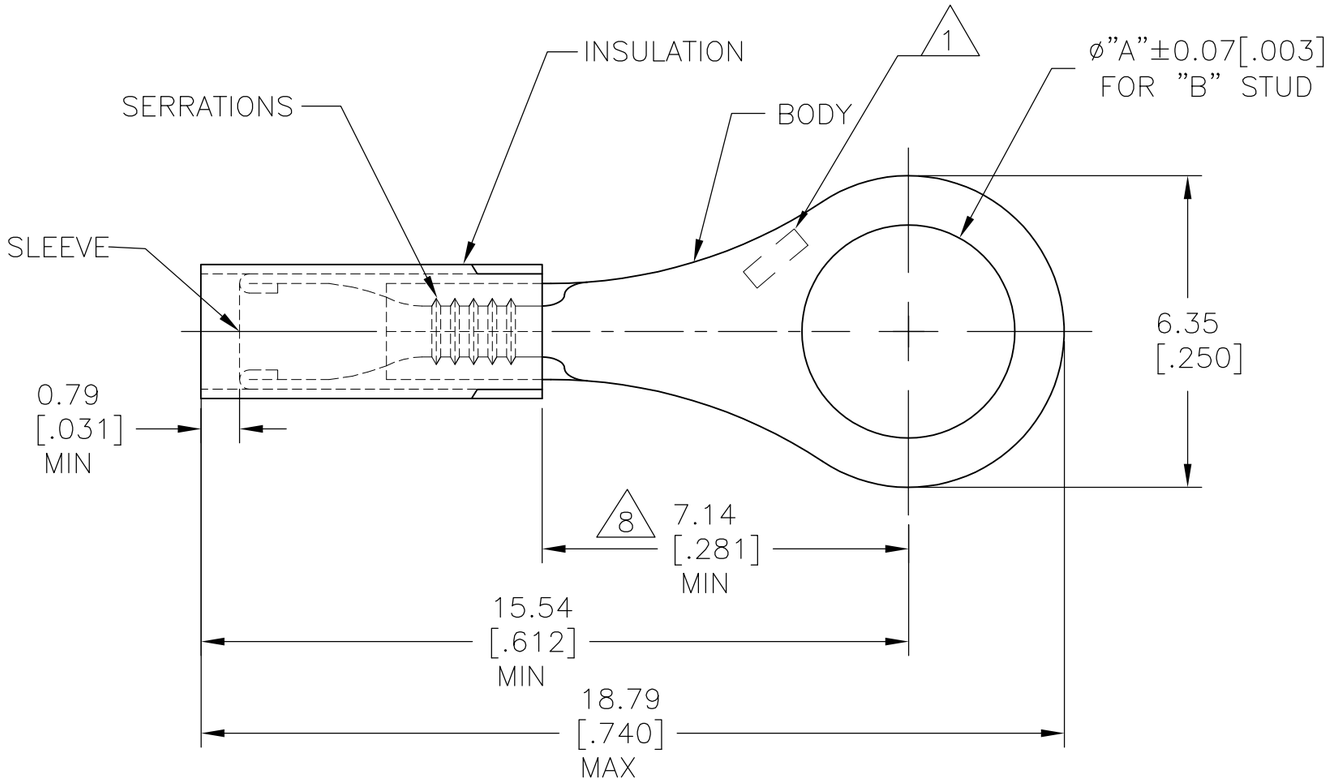

1. STAMP AMP, APPROX AS SHOWN
2. TONGUE MATERIAL THK: 0.457±0.05[.018±.002]
3. BODY: MATERIAL – COPPER ASTM B152
   FINISH – GOLD PLATE ASTM B488
   TYPE 1,CODE C 0.0025 [.000100] MIN EXT THK OVER NICKEL PLATE SAE AMS QQ-N-290 0.00076[.000030] AVG EXT. THK.
4. SLEEVE: COPPER ASTM B152
   NICKEL PL SAE AMS QQ-N-290
   0.00076 [.00003] AVG EXT. THK
5. INSULATION: PTFE ASTM D3295
   COLOR – BLACK
6. FOR 0.81[.032] TO 2.08[.082] WIRE INSULATION DIA.
7. INSULATION: PVDF
   COLOR: BLACK
8. DIMENSION APPLIES FROM EDGE OF METAL WIRE BARREL TO CENTER OF STUD HOLE

	QTY	"A"	"B"	PACKAGE TYPE	PART NO
	1000	5.0[.197]	#10	LOOSE PIECE	5 1-332430-1
	1000	4.34[.171]	M4[#8]	LOOSE PIECE	5 1-332430-0
PRELIMINARY	1000	5.0[.197]	#10	LOOSE PIECE	7 332430-6
PRELIMINARY	1000	4.34[.171]	M4[#8]	LOOSE PIECE	7 332430-5
PRELIMINARY	1000	3.68[.145]	M3.5[#6]	LOOSE PIECE	7 332430-4
	1000	3.68[.145]	M3.5[#6]	LOOSE PIECE	5 332430

AMP INCORPORATED
CUSTOMER SERVICE SYSTEMS

FOR ADDITIONAL PRODUCT INFORMATION OR COPIES OF DRAWINGS AND TECHNICAL DOCUMENTS	PRODUCT INFORMATION CENTER 1-800-522-6752
FOR APPLICATION TOOLING INFORMATION	TOOLING ASSISTANCE CENTER 1-800-722-1111
FOR ORDER ENTRY	1-800-526-5142

MAX RECOMMENDED OPERATING TEMPERATURE: 260°C[500°F]
VOLTAGE RATING: 300V MAX
CIRCULAR MIL AREA: 0.12-0.24mm²[238-475] STRANDED WIRE ONLY

THIS DRAWING IS A CONTROLLED DOCUMENT.

DIMENSIONS: mm [INCHES]

TOLERANCES UNLESS OTHERWISE SPECIFIED:
0 PLC ± -
1 PLC ± -
2 PLC ± -
3 PLC ± 0.127[.005]
4 PLC ± -
ANGLES ± 1°

MATERIAL 3 4 5 7
FINISH 3 4 5 7

DWN JR RUTH	08SEP04	
CHK T MICHIELUTTI	08SEP04	
APVD T MICHIELUTTI	08SEP04	
PRODUCT SPEC —		
APPLICATION SPEC —		
WEIGHT 0		

TE Connectivity

NAME: TERMINAL, RING TONGUE, PIDG, STRATO-THERM, 26-24 AWG
—

SIZE	CAGE CODE	DRAWING NO	RESTRICTED TO
A3	00779	C-332430	—

CUSTOMER DRAWING | SCALE 8:1 | SHEET 1 OF 1 | REV P4

1470-19 (1/15)