THIS DRAWING IS UNPUBLISHED. RELEASED FOR PUBLICATION -,- .
© COPYRIGHT - BY TYCO ELECTRONICS CORPORATION. ALL RIGHTS RESERVED.

LOC	DIST
AF	50

REVISIONS

P	LTR	DESCRIPTION	DATE	DWN	APVD
	A	REL PER 0G3A-0084-04	18FEB04	JR	KY

1 SUPPLIED IN LOOSE PIECE

2 PREPRODUCTION - FASR REQ

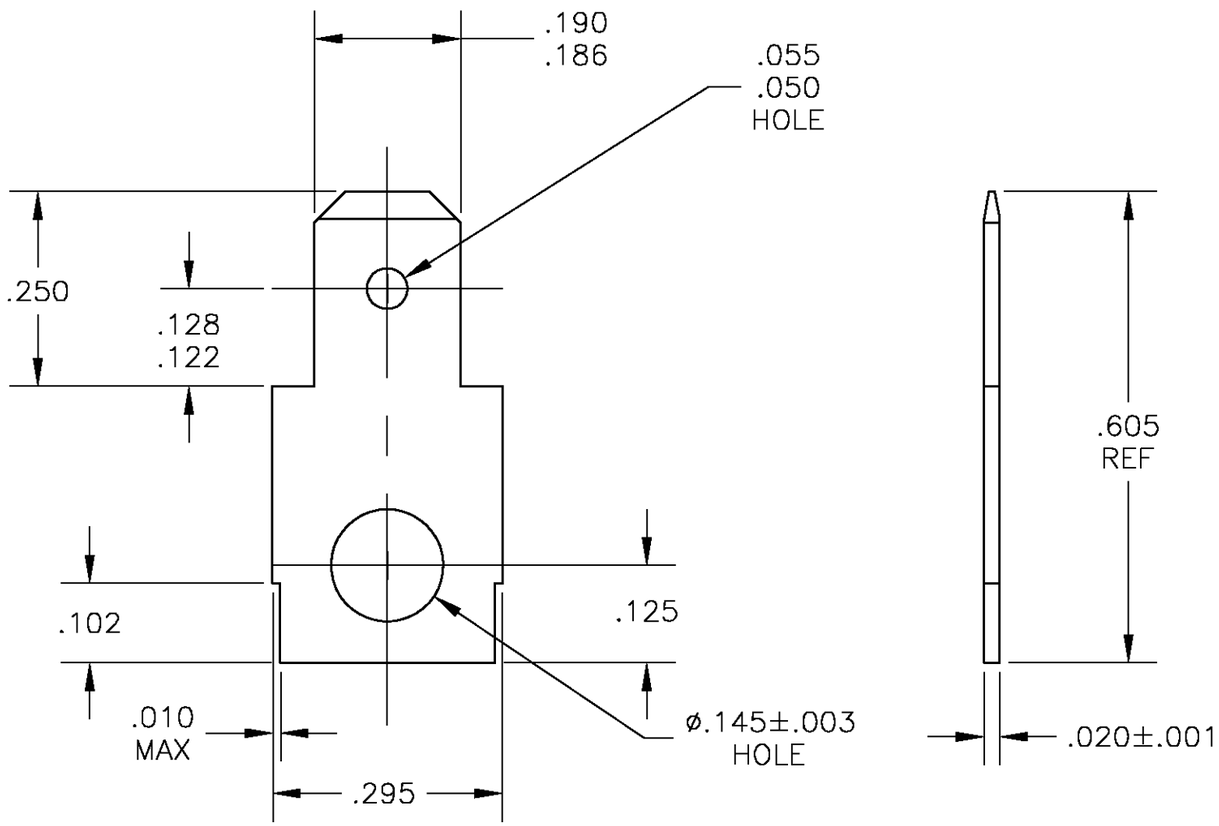

2 1742041-1

PART NO

THIS DRAWING IS A CONTROLLED DOCUMENT.

DIMENSIONS: INCHES

TOLERANCES UNLESS OTHERWISE SPECIFIED:

0 PLC	± -
1 PLC	± -
2 PLC	± -
3 PLC	± .005
4 PLC	± -
ANGLES	± -

MATERIAL: 082 BRASS

FINISH: .000080 MIN TIN

DWN	jr ruth	23DEC2003
CHK	KRISTY YI	23DEC03
APVD	KRISTY YI	23DEC03
PRODUCT SPEC	—	
APPLICATION SPEC	—	
WEIGHT	—	

CUSTOMER DRAWING

tyco Electronics

Tyco Electronics Corporation
Harrisburg, Pa, 17105

NAME: TAB, FASTON, .187 SERIES —

SIZE	CAGE CODE	DRAWING NO	RESTRICTED TO
A3	00779	C-1742041	—

SCALE	SHEET	REV
5:1	1 OF 1	A

AMP 1470-19 REV 31MAR2000