THIS DRAWING IS UNPUBLISHED. RELEASED FOR PUBLICATION 20
© COPYRIGHT 20 - ALL RIGHTS RESERVED.

LOC	DIST
CM	00

REVISIONS

P	LTR	DESCRIPTION	DATE	DWN	APVD
	F	REVISED PER ECO-15-005484	28JUL2015	SC	DZ

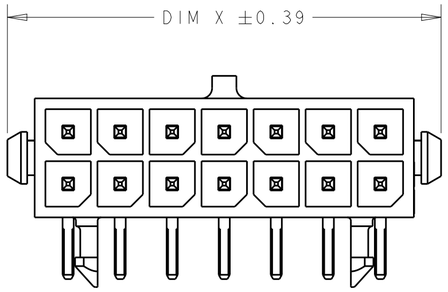

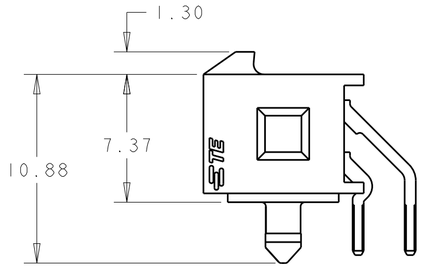

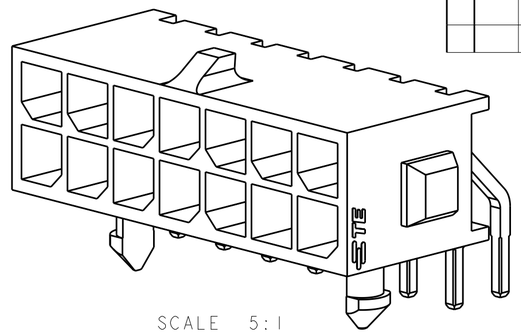

SCALE 5:1

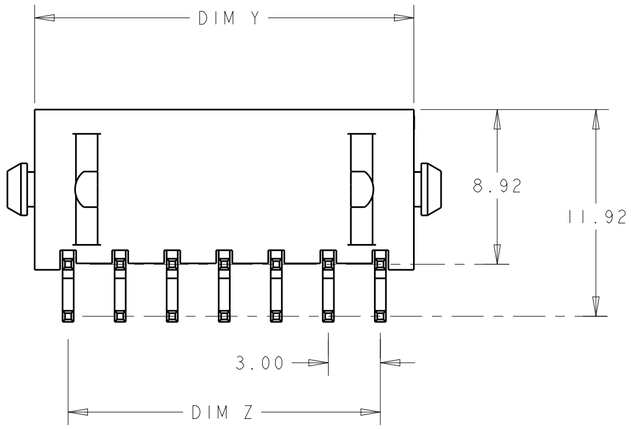

1. MATERIAL;
   CONTACTS - BRASS.
   HOUSING - UL 94V-0 RATED HIGH TEMP NYLON, COLOR; BLACK.
2. FINISH;
   CONTACTS - 2.54µm MINIMUM TIN-LEAD OVER 1.27µm MINIMUM NICKEL.
4. RECOMMENDED PC BOARD THICKNESS OF 1.57.
5. FINISH;
   CONTACTS - 2.54µm MINIMUM MATTE TIN OVER 1.27µm MINIMUM NICKEL.

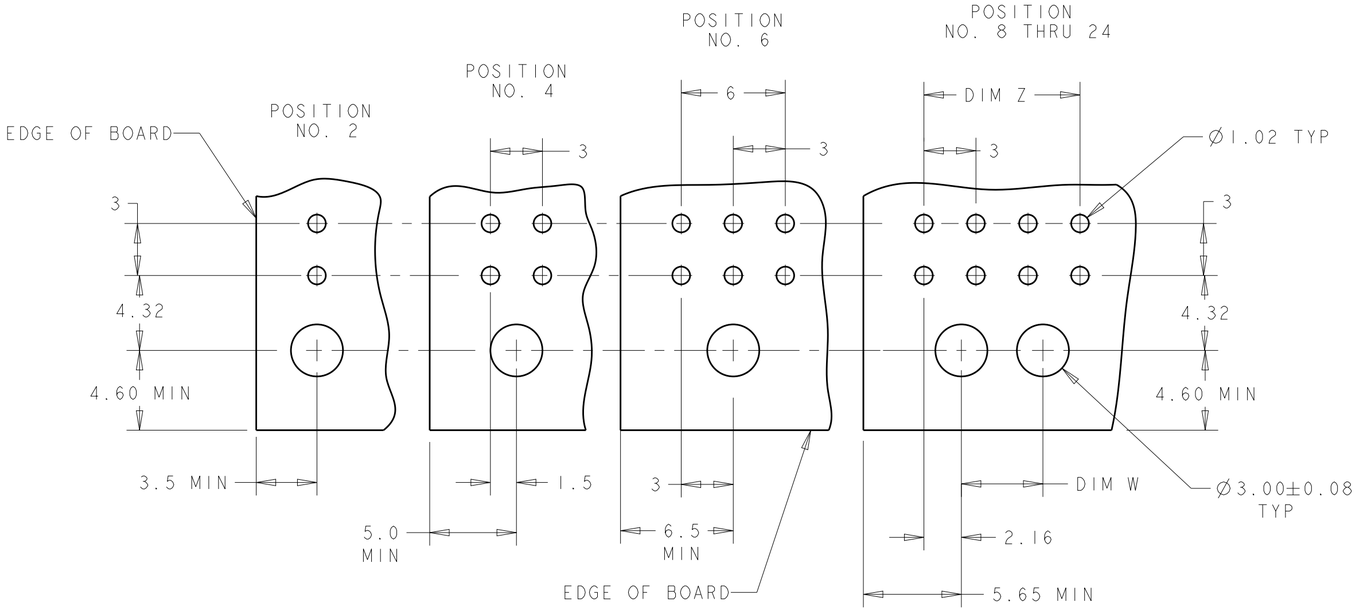

RECOMMENDED PCB LAYOUT (4)
(COMPONENT SIDE)

	FINISH	DIM Y	DIM W	DIM Z	DIM X	NO. OF POSN.	PART NUMBER
	(5)	36.86	28.70	33.00	40.00	24	5-794618-4
		33.86	25.70	30.00	37.00	22	5-794618-2
		30.86	22.70	27.00	34.00	20	5-794618-0
		27.86	19.70	24.00	31.00	18	4-794618-8
		24.86	16.70	21.00	28.00	16	4-794618-6
		21.86	13.70	18.00	25.00	14	4-794618-4
		18.86	10.70	15.00	22.00	12	4-794618-2
		15.86	7.70	12.00	19.00	10	4-794618-0
		12.86	4.70	9.00	16.00	8	3-794618-8
		9.86	-	6.00	13.00	6	3-794618-6
		6.86	-	3.00	10.00	4	3-794618-4
		3.86	-	-	7.00	2	3-794618-2
	(2)	36.86	28.70	33.00	40.00	24	2-794618-4
		33.86	25.70	30.00	37.00	22	2-794618-2
		30.86	22.70	27.00	34.00	20	2-794618-0
		27.86	19.70	24.00	31.00	18	1-794618-8
		24.86	16.70	21.00	28.00	16	1-794618-6
		21.86	13.70	18.00	25.00	14	1-794618-4
		18.86	10.70	15.00	22.00	12	1-794618-2
		15.86	7.70	12.00	19.00	10	1-794618-0
		12.86	4.70	9.00	16.00	8	794618-8
		9.86	-	6.00	13.00	6	794618-6
		6.86	-	3.00	10.00	4	794618-4
		3.86	-	-	7.00	2	794618-2

794618

THIS DRAWING IS A CONTROLLED DOCUMENT.

DIMENSIONS: mm

TOLERANCES UNLESS OTHERWISE SPECIFIED:
0 PLC ±-
1 PLC ±-
2 PLC ±0.13
3 PLC ±-
4 PLC ±-
ANGLES ±-

MATERIAL (1)

FINISH SEE TABLE

METRIC

DWN B. HAYMAKER 12AUG99
CHK K. COBLE 12AUG99
APVD K. COBLE 12AUG99
PRODUCT SPEC -
APPLICATION SPEC -
WEIGHT -

TE Connectivity

NAME THRU-HOLE, R/A, TIN HEADER, PLASTIC BOARDLOCK, DUAL ROW, MICRO MATE-N-LOK™

SIZE A2 | CAGE CODE 00779 | DRAWING NO C-794618 | RESTRICTED TO -

CUSTOMER DRAWING | SCALE 4:1 | SHEET 1 OF 1 | REV F

1471-9 (3/11)

Mouser Electronics

Authorized Distributor

Click to View Pricing, Inventory, Delivery & Lifecycle Information:

TE Connectivity:

1-794618-6