DRAWING MADE IN THIRD ANGLE PROJECTION

/home/us018246

PART NUMBER	REV	FIRST USED
1385618-1	A	122500-1
1385618-2	A	565435-5
1385618-3	A	354500-1

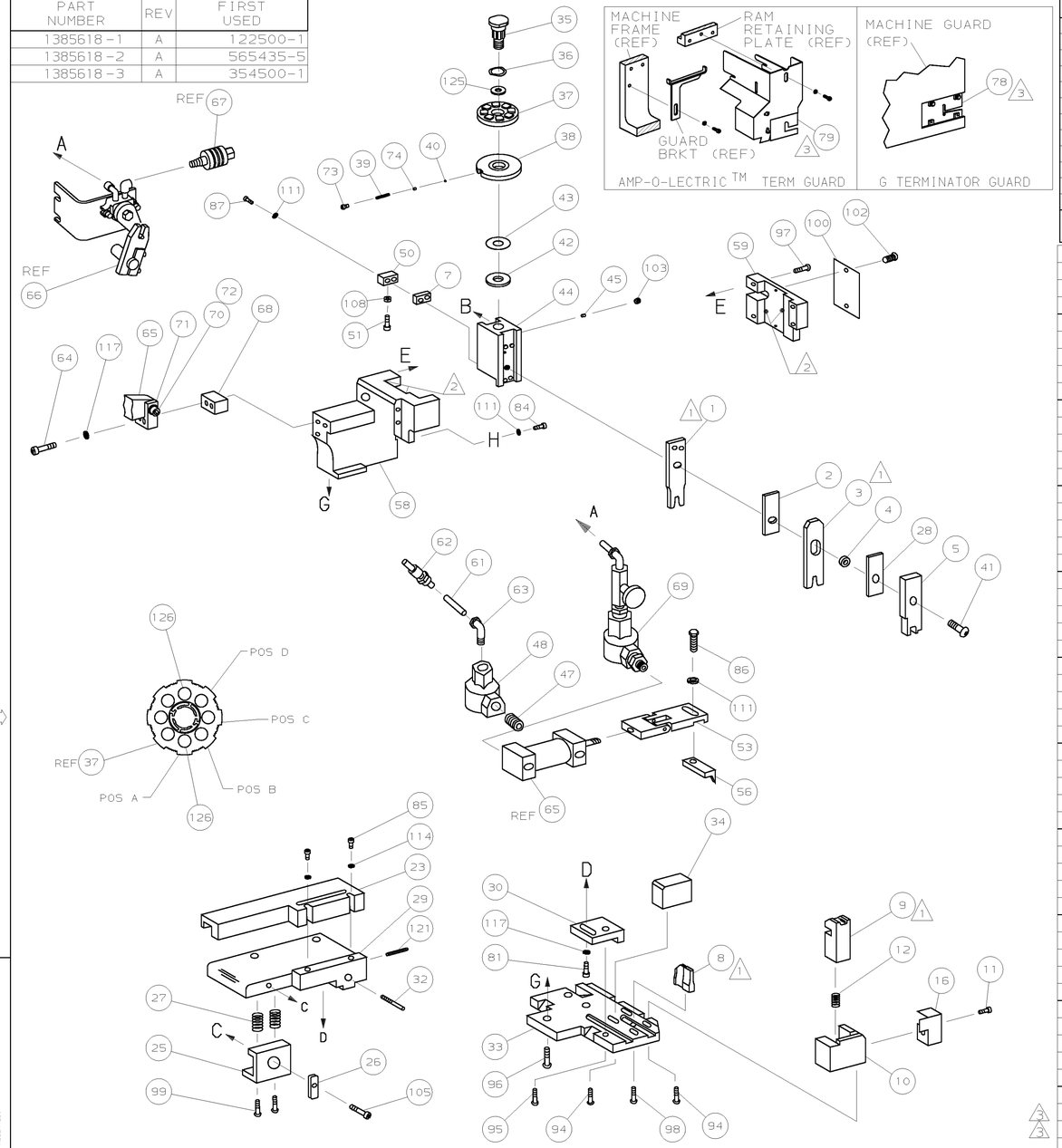

TERMINAL NAME: TAB

AMP TERM PN	MFR TERM PN
1572295	12110700

PACKARD TERMINAL	PACKARD CRIMP SPECS		
PAD LTR	CRIMP HEIGHT		WIRE SIZE
A	.150 ±.002 [3.81 ±0.05mm]		5mm² (10 AWG)
B	NOT		USED
C	NOT		USED
D	NOT		USED
CRIMP	SIZE	TYPE	RANGE
WIRE	.190 [4.83mm]	F	5mm²
INSUL	.250 [6.35mm]	F	.220 MAX

WIRE STRIP LENGTH	TERM APPL SPEC	FEED	APPL INSTRUCTION	SET UP GAGE	LAYOUT
.287-.304	NONE	.949	408-8040	458637-1	L2843

-3	-2	-1	U/M	DWG SIZE	PART NO	DESCRIPTION	ITEM NO
							129
							128
							127
2	2	2	-	C	354779-3	PIN, WIRE DISC (.3005)A	126
1	1	1	-	A	986950-1	WASHER, FLAT PRECISION	125
1	1	1	-	A	217238-1	GENERAL INSTRUCTION PACKAGE	124
1	1	1	-	-	4088040	SF APPL INST 408-8040	123
							122
1	1	1	-	A	4-21028-0	PIN,SLT SPR(ø.093x.75)ST GDE PL	121
							120
							119
							118
2	2	2	-	A	21024-5	WASHER, LOCK(#10)ADJ BLOCK	117
							116
							115
2	2	2	-	A	21024-2	WASHER,LOCK(#4)FRONT STP GUIDE	114
							113
							112
4	4	4	-	A	21024-4	WASHER,LOCK(#8)STRIPPER	111
							110
							109
1	1	1	-	A	21018-5	NUT,HEX(NO.6)HOLDDOWN	108
							107
							106
1	1	1	-	A	22353-8	SCR,SHLD(ø.187x.25)DRAG LEVER	105
							104
1	1	1	-	A	21009-2	SCR,SKT SET(1/4-20x.25 LW)RAM	103
2	2	2	-	A	21017-2	SCR,DRIVE(#2x.19)ID PLATE	102
							101
1	1	1	-	B	461264-1	PLATE, IDENTIFICATION	100
2	2	2	-	A	3-21002-0	SCR,BHC(10-32x.88)DRAG	99
1	1	1	-	A	22733-8	SCR,BHC(8-32x.38 LW)ANVIL	98
4	4	4	-	A	2-21002-9	SCR,BHC(10-32x.75)CAP	97
3	3	3	-	A	2-22733-8	SCR,BHC(1/4-20x.62)H5G	96
1	1	1	-	A	2-21002-7	SCR,BHC(10-32x.50)SG ADJ BLK	95
4	4	4	-	A	2-21002-2	SCR,BHC(8-32x.50)TERM H DWN	94
							93
							92
							91
							90
							89
							88
2	2	2	-	A	2-21000-8	SCR,SHC(8-32x.62)DEP-HOLD	87
1	1	1	-	A	2-22603-1	SCR,HEX HD(8-32x.38)FEED FINGER	86
2	2	2	-	A	1-21000-6	SCR,SHC(4-40x.62)FR ST GUIDE	85
1	1	1	-	A	2-21000-7	SCR,SHC(8-32x.50)STRIPPER	84
							83
							82
1	1	1	-	A	3-21000-4	SCR,SHC(10-32x.38)SG ADJ BL	81
							80
-	REF	-	-	B	455749-1	GUARD, WINDOW	79
REF	-	-	-	B	679532-1	INSERT, GUARD	78
							77
							76
							75
1	1	1	-	A	690603-1	SPRING, ASSIST	74
1	1	1	-	A	23030-1	SCR,SHC(6-32x.25 SL)INS DISC	73
1	1	1	-	A	3-21001-5	SCR,SHC(3/8x1.00)FEED MT	72
1	1	1	-	B	459610-1	MOUNT, FEED BRACKET	71
-3	-2	-1	U/M	DWG SIZE	PART NO	DESCRIPTION	ITEM NO

QTY REQD PER ASSY — PARTS LIST

-1	LEADMAKER	AIRFEED
-2	BENCH MODEL K	AIRFEED
-3	BENCH MODEL G	AIRFEED

-3	-2	-1	U/M	DWG SIZE	PART NO	DESCRIPTION	ITEM NO
1	1	1	-	A	21024-8	WASHER,LOCK(3/8)FEED BRKT	70
-	1	-	-	C	692655-5	AIR FEED VALVE ASSY	69
1	1	1	-	A	461690-3	SPACER, AIR FEED	68
-	REF	-	-	A	24042-2	VALVE, SHUT OFF	67
-	REF	-	-	C	692655-6	AIR FEED VALVE ASSY	66
1	1	1	-	B	461065-2	AIR FEED ASSY (2 INCH)	65
2	2	2	-	A	4-21000-1	SCR,SHC(10-32x1.50)AIR ASSY	64
1	-	1	-	A	980285-2	ELBOW, SWIVEL 1/8 NPT - 1/4 T	63
1	-	1	-	A	23238-1	QUICK DISCONNECT	62
21.00	-	21.00	IN	A	27319-4	TUBING, POLY-FLO ø.25	61
							60
REF	REF	REF	-	C	454220-1	CAP, RAM	59
1	1	1	-	D	454485-1	HOUSING	58
							57
1	1	1	-	B	1-694433-6	PAWL, FEED	56
							55
							54
1	1	1	-	B	461062-1	FEED FINGER ASSY	53
							52
1	1	1	-	A	811242-2	BUMPER, HOLDDOWN	51
1	1	1	-	A	690753-1	SPACER, TONKER	50
							49
1	-	1	-	A	22374-7	VALVE, QUICK EXHAUST	48
1	-	1	-	A	22304-1	NIPPLE, HEX 1/8 NPT	47
							46
1	1	1	-	A	690191-1	PLUG, NYLON	45
1	1	1	-	C	1-819307-4	RAM	44
1	1	1	-	A	690125-1	WASHER, LAMINATED	43
1	1	1	-	A	690124-5	WASHER, RAM	42
1	1	1	-	A	7-21002-9	BOLT, CRIMPER(5/16x1.00)	41
1	1	1	-	A	23241-6	BALL, STEEL	40
1	1	1	-	A	690170-1	SPRING, COMPRESSION	39
1	1	1	-	C	690142-1	DISC, INSULATION	38
1	1	1	-	D	354777-1	WIRE DISC, PLASTIC	37
1	1	1	-	A	22480-5	WASHER, SPRING	36
1	1	1	-	B	690212-1	POST, RAM	35
1	1	1	-	B	690786-6	SUPPORT, TERMINAL	34
1	1	1	-	D	455675-1	PLATE, BASE	33
1	1	1	-	A	690432-3	SCREW, ADJUSTMENT	32
							31
1	1	1	-	B	455689-1	BLOCK, STRIP GUIDE ADJ	30
1	1	1	-	C	458144-6	PLATE, STRIP GUIDE	29
1	1	1	-	C	455888-5	SPACER, FRONT SHEAR DEP	28
2	2	2	-	A	1-22284-0	SPRING, DRAG	27
1	1	1	-	B	240793-1	LEVER, DRAG RELEASE	26
1	1	1	-	B	240792-1	DRAG, TERMINAL	25
							24
1	1	1	-	A	679651-4	GUIDE, STRIP (FRONT)	23
-	-	1	-	B	690472-2	STRIPPER	22
							21
							20
1	1	-	-	B	458230-1	STRIPPER	19
							18
							17
1	1	1	-	B	318563-1	GUARD, CHIP, FRONT	16
							15
							14
							13
1	1	1	-	A	5-22280-0	SPRING, SHEAR	12
1	1	1	-	B	690461-1	STOP, SHEAR	11
1	1	1	-	C	690459-1	HOLDER, SHEAR (FRONT)	10
1	1	1	-	C	1-454276-9	SHEAR, FLOAT (FRONT)	9
1	1	1	-	C	3-318711-6	ANVIL	8
1	1	1	-	C	2-240641-4	SPACER, DEPRESSOR (REAR)	7
							6
1	1	1	-	C	1-455889-7	DEPRESSOR, SHEAR (FRONT)	5
1	1	1	-	B	3-238011-2	SPACER, BLOCK CRIMPER	4
1	1	1	-	C	8-1213077-0	CRIMPER, INSULATION	3
1	1	1	-	C	455888-7	SPACER, CRIMPER	2
1	1	1	-	C	456429-1	CRIMPER, WIRE	1

QTY REQD PER ASSY — REVISION OF EACH ASSY NO (WHEN BLANK, USE DWG REVISION) — PARTS LIST

1. RECOMMENDED SPARE PARTS.
2. GREASE LIGHTLY.
3. GUARD MUST BE IN PLACE WHEN OPERATING APPLICATOR IN A BENCH MACHINE.
4. SEE DRAWING FOR COMPONENTS
5. MOVE STRIPPER BACK WHEN RUNNING ON LEADMAKER.

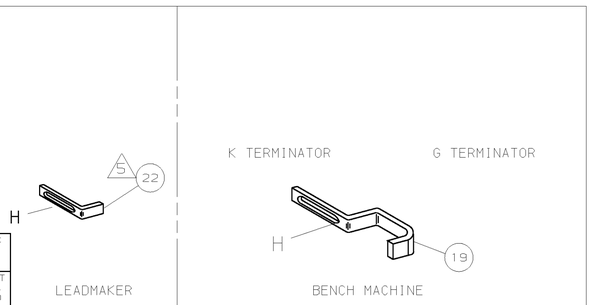

P	F	LTR	REVISION RECORD	APP	DATE
		A	REVISED	BH	JUL03

DIMENSIONS IN INCHES. DO NOT SCALE PRINT.
TOLERANCES UNLESS OTHERWISE SPECIFIED:
2 PLC DEC ±-
3 PLC DEC ±-
4 PLC DEC ±-
ANGLES ± -
SURF TEXTURE, √
REMOVE BURRS, BREAK SHARP EDGES R.015 MAX

MATL – | HT TR – | FIN –

DR B.HIGMAN 13JUN03 | APP T.ELBIN 13JUN03 | CHK – | REL –

AMP — Tyco Electronics, Harrisburg, PA 17105-3608

NAME SIDE FEED HDM APPLICATOR | MACHINE REF MINI APPL

SCALE – | D | DWG NO 1385618 | SHEET 1 OF 1 | REV A

CAGE CODE 00779 — CUSTOMER AND ASSEMBLY DRAWING — RESTRICTED TO –

THIS DRAWING IS A CONTROLLED DOCUMENT.
THIS DRAWING IS UNPUBLISHED. RELEASED FOR PUBLICATION .20
© COPYRIGHT 20 BY AMP INCORPORATED. ALL RIGHTS RESERVED.

LOC A | DIST 66

Mouser Electronics

Authorized Distributor

Click to View Pricing, Inventory, Delivery & Lifecycle Information:

TE Connectivity:

1385618-3