THIS DRAWING IS UNPUBLISHED. RELEASED FOR PUBLICATION 20
© COPYRIGHT 20 BY TYCO ELECTRONICS CORPORATION. ALL RIGHTS RESERVED.

PART NUMBER	REV	TERMINATOR	FEED TYPE	DESCRIPTION
1530021-1	A	LEADMAKER	MECH POST FEED	CUTS CARRIER
1530021-2	A	BENCH	MECH PRE FEED	CUTS CARRIER
1530021-6	A	LEADMAKER	MECH POST FEED	CONTINUOUS CARRIER
7-1530021-1	A	LEADMAKER	MECH POST FEED	-1 AND SPARE PARTS
7-1530021-2	A	BENCH	MECH PRE FEED	-2 AND SPARE PARTS
7-1530021-6	A	LEADMAKER	MECH POST FEED	-6 AND SPARE PARTS
7-1530021-7	A	-	-	SPARE PARTS KIT

SET UP GAGE 458637-3

LOC	DIST
A	66

REVISIONS

P	LTR	DESCRIPTION	DATE	DWN	APVD
	A	RELEASED	15OCT2008	RK	TE

CRIMP DATA DELPHI/PACKARD TERMINAL & CRIMP SPECS 7			
TERMINAL NAME: FEMALE METRI-PACK 280			
CRIMP	SIZE	TYPE	RANGE
WIRE	2.44 [.096 IN]	F	0.5-1mm²
INSUL	4.32 [.170 IN]	O	Ø4.25mm [.167 IN] MAX 5
WIRE STRIP LENGTH 5.20-6.00 [.205-.236 IN]			APPL INSTRUCTIONS 408-8322 & 408-8490
TERMINAL APPL SPEC	DELPHI/PACKARD DATA SEETS - 12077411		FEED 14.50 [.571 IN]

TERMINALS APPLIED

TE TERM PN	MANU TERM PN	TE SEAL PN	MANU SEAL PN
286650	12077411	286914	12010293
-	-	-	-
-	-	-	-
-	-	-	-

WIRE SIZE	CRIMP HEIGHT *	REF SETTING *
1.00mm²	1.55 ±0.05 [.061 ±.002 IN]	C0
0.80mm²	1.40 ±0.05 [.055 ±.002 IN]	D6
0.50mm²	1.35 ±0.05 [.053 ±.002 IN]	D8
-	-	-
-	-	-
-	-	-
-	-	-
-	-	-
-	-	-
-	-	-
-	-	-
-	-	-

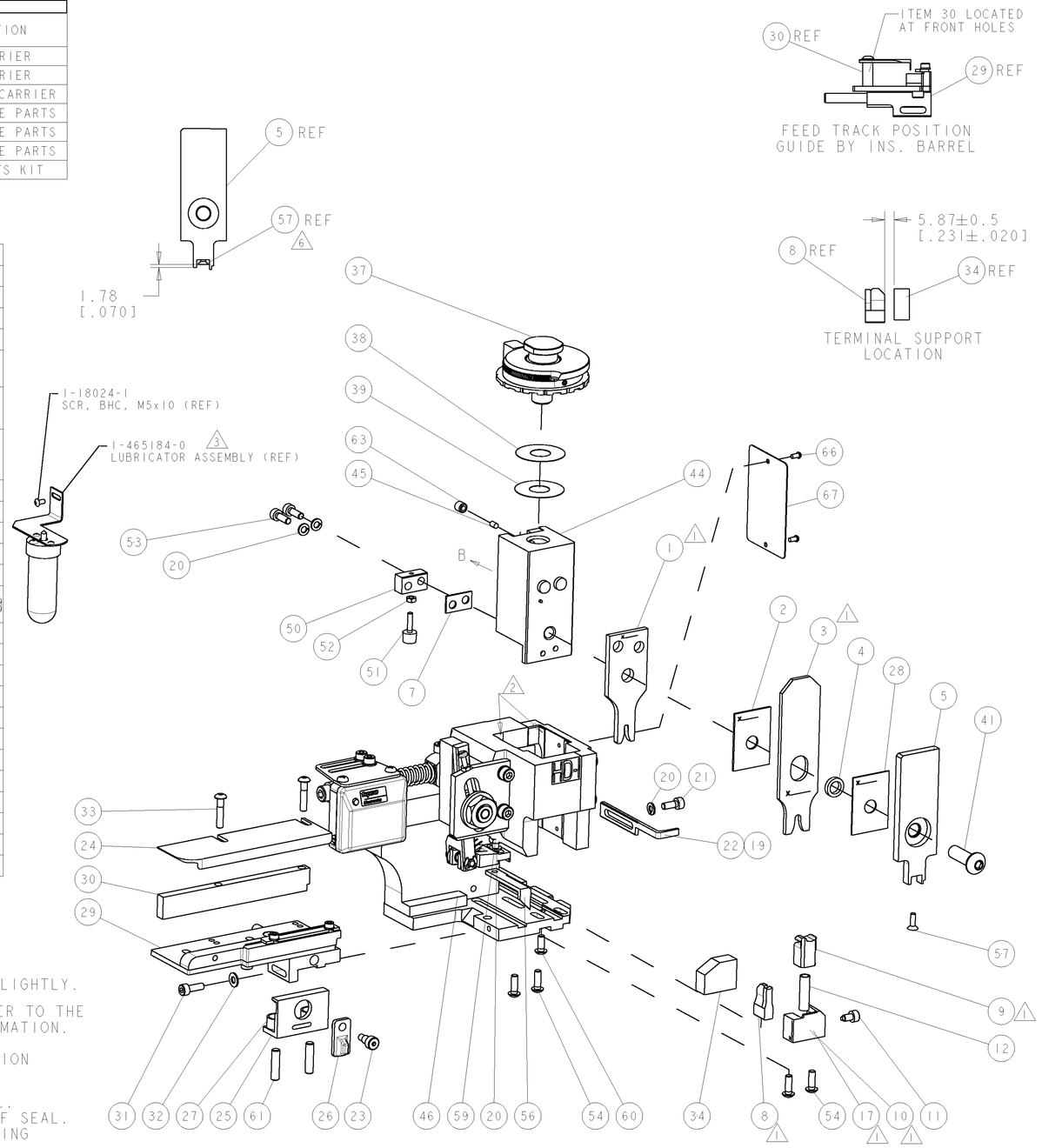

1. RECOMMENDED SPARE PARTS.
2. GREASE RAM, CAM, CAM FOLLOWER AND FEED ROD LIGHTLY.
3. CERTAIN TERMINALS REQUIRE LUBRICATION. REFER TO THE APPLICATOR INSTRUCTION SHEET FOR MORE INFORMATION.
4. LUBRICATE DAILY PER THE APPLICATOR INSTRUCTION SHEET SUPPLIED WITH THE APPLICATOR.
5. THIS APPLICATOR APPLIES TERMINAL WITH A SEAL. INSULATION DIA QUOTED IS OUTSIDE DIAMETER OF SEAL. WIRE INSULATION DIA IS DEPENDENT ON SEAL BEING APPLIED. SEAL PN 286914 INS. DIA RANGE IS 2.03-3.12[.080-.123 IN].
6. APPLY TORQ-SEAL IN ALLEN SOCKET TO FILL HOLE AFTER FLAT HD HAS BEEN ADJUSTED TO CORRECT HEIGHT AT QUALIFICATION. APPLY #1-23419-5 LOC-TITE TO THREADS.
7. ALL CRIMP DATA SUPPLIED BY DELPHI/PACKARD.

* WARNING
ON INSTALLATION, SET WIRE DISC TO LARGEST WIRE SIZE SETTING. USE OF SETTINGS BELOW MIN. REQUIRED CRIMP HEIGHT SETTING WILL CAUSE DAMAGE TO CRIMP TOOLING.

VIEW B ROTATED 180°

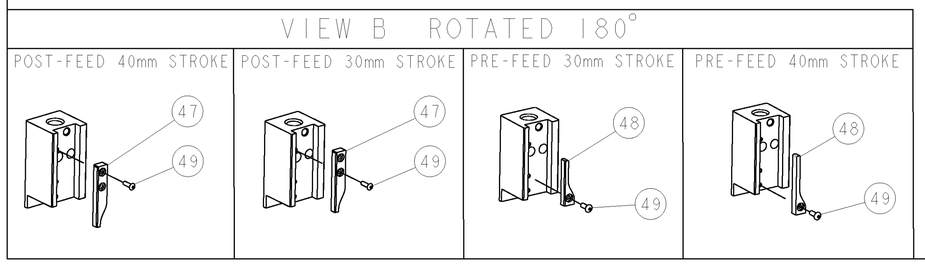

ITEM NO	DESCRIPTION	PART NO	-1	-2	-6	-71	-72	-76	-77
84	-	-	-	-	-	-	-	-	-
83	-	-	-	-	-	-	-	-	-
82	-	-	-	-	-	-	-	-	-
81	-	-	-	-	-	-	-	-	-
80	-	-	-	-	-	-	-	-	-
79	-	-	-	-	-	-	-	-	-
78	-	-	-	-	-	-	-	-	-
77	-	-	-	-	-	-	-	-	-
76	-	-	-	-	-	-	-	-	-
75	-	-	-	-	-	-	-	-	-
74	-	-	-	-	-	-	-	-	-
73	-	-	-	-	-	-	-	-	-
72	-	-	-	-	-	-	-	-	-
71	DOCUMENTATION PACKAGE	1338705-3	1	1	1	1	1	1	-
70	-	-	-	-	-	-	-	-	-
69	-	-	-	-	-	-	-	-	-
68	-	-	-	-	-	-	-	-	-
67	PLATE, IDENTIFICATION	461264-5	1	1	1	1	1	1	-
66	SCREW, DRIVE	21017-2	2	2	2	2	2	2	-
65	-	-	-	-	-	-	-	-	-
64	-	-	-	-	-	-	-	-	-
63	SCR, SET, CUP POINT M6 X 6.0	3-18031-0	1	1	1	1	1	1	-
62	-	-	-	-	-	-	-	-	-
61	SCR, SET, FLT POINT M5 X 20.0	2-18032-5	2	2	2	2	2	2	-
60	SCR, BTN SKT HD CAP (M4 X 10.0)	18024-7	1	1	1	1	1	1	-
59	SCR, HEX HD CAP M4 X 8.0	5-18022-2	1	1	1	1	1	1	-
58	-	-	-	-	-	-	-	-	-
57	SCR, FLT SKT HD CAP M3 X 10.0	985575-3	1	1	1	1	1	1	-
56	PAWL, FEED	1338685-1	1	1	1	1	1	1	-
55	-	-	-	-	-	-	-	-	-
54	SCR, BTN SKT HD CAP (M4 X 12.0)	18024-8	4	4	4	4	4	4	-
53	SCR, SKT HD CAP M4 X 12.0	1-18023-2	2	2	2	2	2	2	-
52	NUT, HEX, REG M3	18030-1	1	1	1	1	1	1	-
51	BUMPER, HOLD DOWN	811242-6	1	1	1	1	1	1	-
50	SPACER, TONKER	690753-2	1	1	1	1	1	1	-
49	SCR, BTN SKT HD CAP (M3 X 10.0)	18024-3	1	1	1	1	1	1	-
48	CAM, UNIVERSAL PRE FEED	1338675-1	-	1	-	-	1	-	-
47	CAM, UNIVERSAL POST-FEED	1338676-1	1	-	1	1	-	1	-
46	APPLICATOR SUBASSEMBLY, HDI	1320999-3	1	1	1	1	1	1	-
45	PLUG,NYLON	690191-1	1	1	1	1	1	1	-
44	RAM	1338660-1	1	1	1	1	1	1	-
43	-	-	-	-	-	-	-	-	-
42	-	-	-	-	-	-	-	-	-
41	SCR, BTN SKT HD CAP (M8 X 25.0)	2-18024-6	1	1	1	1	1	1	-
40	-	-	-	-	-	-	-	-	-
39	SHIM SUB-ASSY	690125-1	1	1	1	1	1	1	-
38	SHIM	469367-1	1	1	1	1	1	1	-
37	FINE ADJUST HEAD ASSEMBLY	879103-2	1	1	1	1	1	1	-
36	-	-	-	-	-	-	-	-	-
35	-	-	-	-	-	-	-	-	-
34	SUPPORT, TERMINAL	1320934-1	1	1	1	1	1	1	-
33	SCR, BTN SKT HD CAP (M4 X 20.0)	1-18024-0	2	2	2	2	2	2	-
32	WASHER, FLAT, REG M4	18027-2	1	1	1	1	1	1	-
31	SCR, SKT HD CAP M4 X 12.0	1-18023-2	1	1	1	1	1	1	-
30	SPACER, STRIP GUIDE	1-1320908-0	1	1	1	1	1	1	-
29	STRIP GUIDE ASSEMBLY	1633073-1	1	1	1	1	1	1	-
28	SPACER, CRIMPER	455888-6	1	1	1	1	1	1	-
27	SPRING, COMPRESSION	1-22284-0	2	2	2	2	2	2	-
26	LEVER, DRAG RELEASE	356835-1	1	1	1	1	1	1	-
25	DRAG, TERMINAL	240792-1	1	1	1	1	1	1	-
24	PLATE, STRIP GUIDE	1320928-2	1	1	1	1	1	1	-
23	SCR, SKT HD SHLDR 5.0 DIA X 6.0	980371-4	1	1	1	1	1	1	-
22	STRIPPER	690472-2	1	-	1	1	-	1	-
21	SCR, SKT HD CAP M4 X 10.0	1-18023-1	1	1	1	1	1	1	-
20	WASHER, SPRG LOCK, REG M4	18025-2	4	4	4	4	4	4	-
19	STRIPPER	690472-1	-	1	-	-	1	-	-
18	-	-	-	-	-	-	-	-	-
17	SHEAR HOLDER, FRONT	1338684-2	1	-	-	1	-	1	-
16	-	-	-	-	-	-	-	-	-
15	-	-	-	-	-	-	-	-	-
14	-	-	-	-	-	-	-	-	-
13	-	-	-	-	-	-	-	-	-
12	SPRING, COMPRESSION	3-22280-3	1	1	1	1	1	1	-
11	STOP, SHEAR	356885-5	1	1	1	1	1	1	-
10	SHEAR HOLDER, FRONT, CUT	1-1320921-0	1	1	-	1	1	-	-
9	FLOATING SHEAR, FRONT	318707-2	1	1	1	1	1	1	-
8	ANVIL, COMBINATION	1633711-1	1	2	2	2	1	2	1
7	SPACER	5-240641-9	1	1	1	1	1	1	-
6	-	-	-	-	-	-	-	-	-
5	DEPRESSOR, SHEAR	1338680-1	1	1	1	1	1	1	-
4	BLOCK, CRIMPER SPACER	3-238011-3	1	1	1	1	1	1	-
3	CRIMPER, INSUL O PREMIUM	8-904741-3	1	2	2	2	1	2	1
2	SPACER, CRIMPER	1-455888-0	1	1	1	1	1	1	-
1	CRIMPER, WIRE PREMIUM	1490019-3	1	2	2	2	1	2	1
ITEM NO	DESCRIPTION	PART NO	-1	-2	-6	-71	-72	-76	-77

THIS DRAWING IS A CONTROLLED DOCUMENT FOR TYCO ELECTRONICS CORPORATION. IT IS SUBJECT TO CHANGE AND THE CONTROLLING ENGINEERING ORGANIZATION SHOULD BE CONTACTED FOR THE LATEST REVISION.

DIMENSIONS: mm [IN]

TOLERANCES UNLESS OTHERWISE SPECIFIED:
0 PLC ±-
1 PLC ±-
2 PLC ±-
3 PLC ±-
4 PLC ±-
ANGLES ±-

MATERIAL - -
FINISH - -

DWN R. KNEPPER 24SEP2008
CHK T. ELBIN 15OCT2008
APVD N. DEMING 15OCT2008
PRODUCT SPEC -
APPLICATION SPEC See Table
WEIGHT -

Tyco Electronics
Tyco Electronics
Harrisburg, PA 17105-3608

NAME FINE ADJUST SIDE FEED HDI APPLICATOR -

SIZE	CAGE CODE	DRAWING NO	RESTRICTED TO
A1	00779	C-1530021	-

CUSTOMER DRAWING SCALE 3:5 SHEET 1 OF 1 REV A

AMP 4805 REV 31MAR2000

Pro/ENGINEER DRAWING