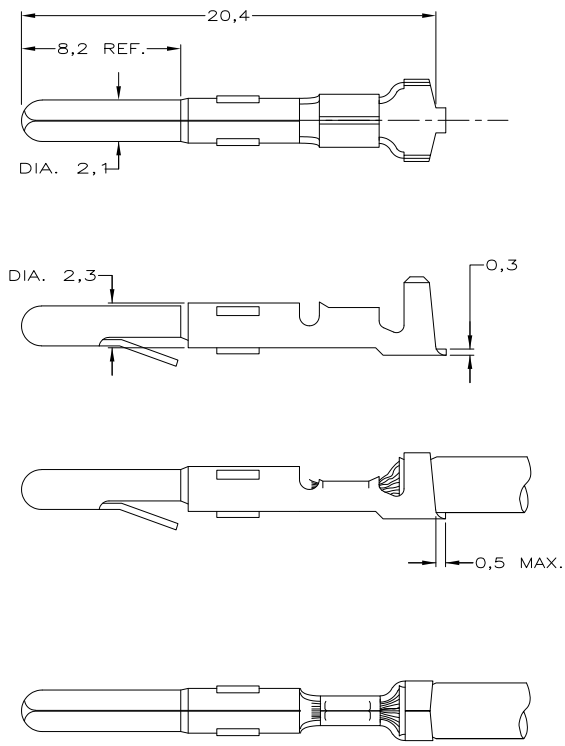

DO NOT SCALE
DIMENSIONS IN mm

METRIC

THIRD ANGLE PROJECTION

WIRE RANGE : 0,5–1,0mm
INSULATION RANGE : 1,8–3,3 DIA.

	–	–	–
		–	–
	–	–	–
	–	–	–
	–	–	–
	–	–	–
	–	–	–
	–	–	–
	PRE–TINPLATED	PHOSPHOR BR.	163305–4
	UNPLATED	PHOSPHOR BR.	163305–3
	PRE–TINPLATED	BRASS	163305–2
	UNPLATED	BRASS	163305–1
–	PLATING	MATERIAL	PARTNUMBER

LTR.	REVISION RECORD	DR.	CHK.	DATE
C1	REVISED PER ECO–11–005294	RK	HMR	05APR11

CUSTOMER DRAWING — FOR REFERENCE ONLY WILL NOT BE UPDATED

© COPYRIGHT – BY –
ALL INTERNATIONAL RIGHTS RESERVED.

THIS DRAWING IS UNPUBLISHED
~~RELEASED FOR PUBLICATION – ,19 –~~

TE Connectivity

NAME: PIN MATE–N–LOK.

DR.: J.v.LIEMPT DATE: 24 OCT 96
CHK.: A.BIJNEN. DATE: –
APP.: M.v.DRIEL DATE: –

DWG.No. C–163305 | REV.LTR. C1 | SHEET 1 OF 1 | A3

R6–210 (REV.04–91)

Downloaded from Elcodis.com electronic components distributor