MICRO SWITCH
FREEPORT ILLINOIS U S A
A DIVISION OF HONEYWELL
FED MFG. CODE 91929

SWITCH – TOGGLE

CATALOG LISTING
1TL91 SERIES
CHART 1

THIS DRAWING COVERS A PROPRIETARY ITEM AND IS THE PROPERTY OF MICRO SWITCH, A DIVISION OF HONEYWELL. THIS DRAWING IS NOT TO BE COPIED OR USED WITHOUT THE APPROVAL OF MICRO SWITCH.

CATALOG LISTING	CIRCUIT MADE WITH TOGGLE LEVER IN (5) KEYWAY SIDE (1-2)	CENTER (1-2)	OPPOSITE KEYWAY (2-3)	MILITARY RATING (AMPS) DC VOLTS 28	125	250	AC VOLTS 125	250	LAMP LOAD 28 VDC	125 VAC	INDUCTIVE LOAD 28 VDC	125 VAC
1TL91-1	ON	OFF	ON									
1TL91-2	OFF	NONE	ON									
1TL91-3	ON	NONE	ON	20	75	5	15	6	5	3	15	10
1TL91-21	NONE	OFF	ON	(REFER TO L191 FOR UL RATING)								
1TL91-31	NONE	ON	ON									
1TL91-4	MOM OFF	NONE	ON									
1TL91-5	MOM ON	OFF	ON									
Ⓑ	MOM ON	NONE	OFF									
1TL91-7	MOM ON	OFF	MOM ON	15	75	.5	15	6	4	2	10	7
1TL91-8	MOM ON	NONE	ON	(REFER TO L192 FOR UL RATING)								
1TL91-51	NONE	ON	MOM ON									
1TL91-61	MOM ON	OFF	NONE									

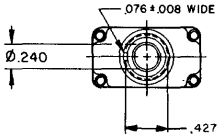

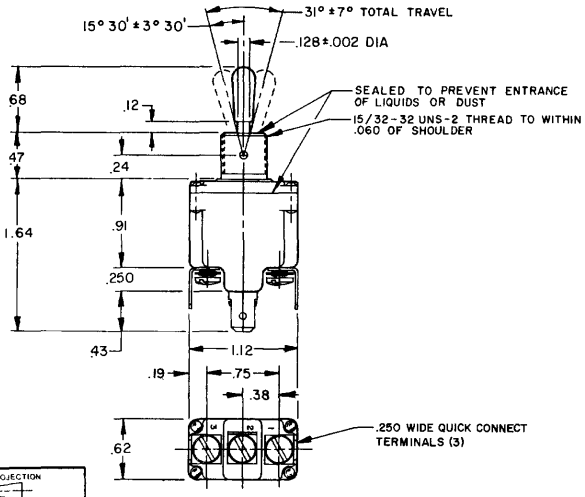

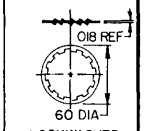

LOCKWASHER (3)

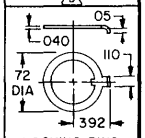

LOCKING RING (3)

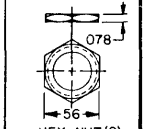

HEX NUT (2) (3)

NOTES
1 - SWITCHES ARE CAPABLE OF WITHSTANDING A TEMPERATURE OF 160°F CONTINUOUSLY AT FULL RATED LOAD
2 - CIRCUIT DESIGNATION AND MICRO SWITCH CATALOG LISTING MARKED ON SIDE OF SWITCH
(3) FURNISHED UNASSEMBLED
4 - FOR TERMINAL COVER SEE MICRO SWITCH CATALOG LISTING 5PA7
(5) APPLIES ONLY TO "ON" AND "MOMENTARY ON" POSITIONS

THIRD ANGLE PROJECTION
SCALE FULL
DO NOT SCALE PRINT
TOLERANCES
APPLY TO DESIGN UNITS. CONVERSIONS ARE ONLY FOR REFERENCE UNLESS NOTED. TOLERANCES ARE ±

	DIM mm	TOL mm/m	DIM in	TOL in/in
NO PLACES	X	1/2	X	0.02/12
ONE PLACE	X.X	0.4/018	X.X	0.06/015
TWO PLACES	X.XX	0.15/.006	X.XX	0.06/.015
THREE PLACES			X.XXX	0.15/.006
ANGLES				

SI METRIC ☐ US CUSTOMARY ■
DESIGN UNITS ☐
RAW MATERIAL-COMMERCIAL STANDARD
MICRO SWITCH STANDARDS APPLY
DIMENSIONS ARE TO BE MET BEFORE PROTECTIVE COATINGS ARE APPLIED
WEIGHT 08 LBS APPROX

15A-125,250 OR 277VAC
1/2HP-125VAC;1HP-250,277VAC
5A-125VAC "L" CODE L191

10A-125,250 OR 277VAC
1/4HP-125VAC;1/2HP-250,277VAC
3A-125VAC "L" CODE L192

CATALOG LISTING 1TL91 SERIES CHART 1
PAGE 1 OF 1
ISSUE M 13
RELEASE NO. PR-4116
REPLACES
CHECK

REVISIONS
A C077942 JAF 28 JUN 94
B CG-95307 CSI 19 NOV 99
C CG-94432 CSI 23 NOV 99
D 200235 JJA 18 APR 00

FORMTEK
DRAWN JAF 28 JUN 94
CHECK

Downloaded from Elcodis.com electronic components distributor