MICRO SWITCH
a Honeywell Division
FED. MFG. CODE 91929

SWITCH–ENCLOSED

CATALOG LISTING
1EN330–R3

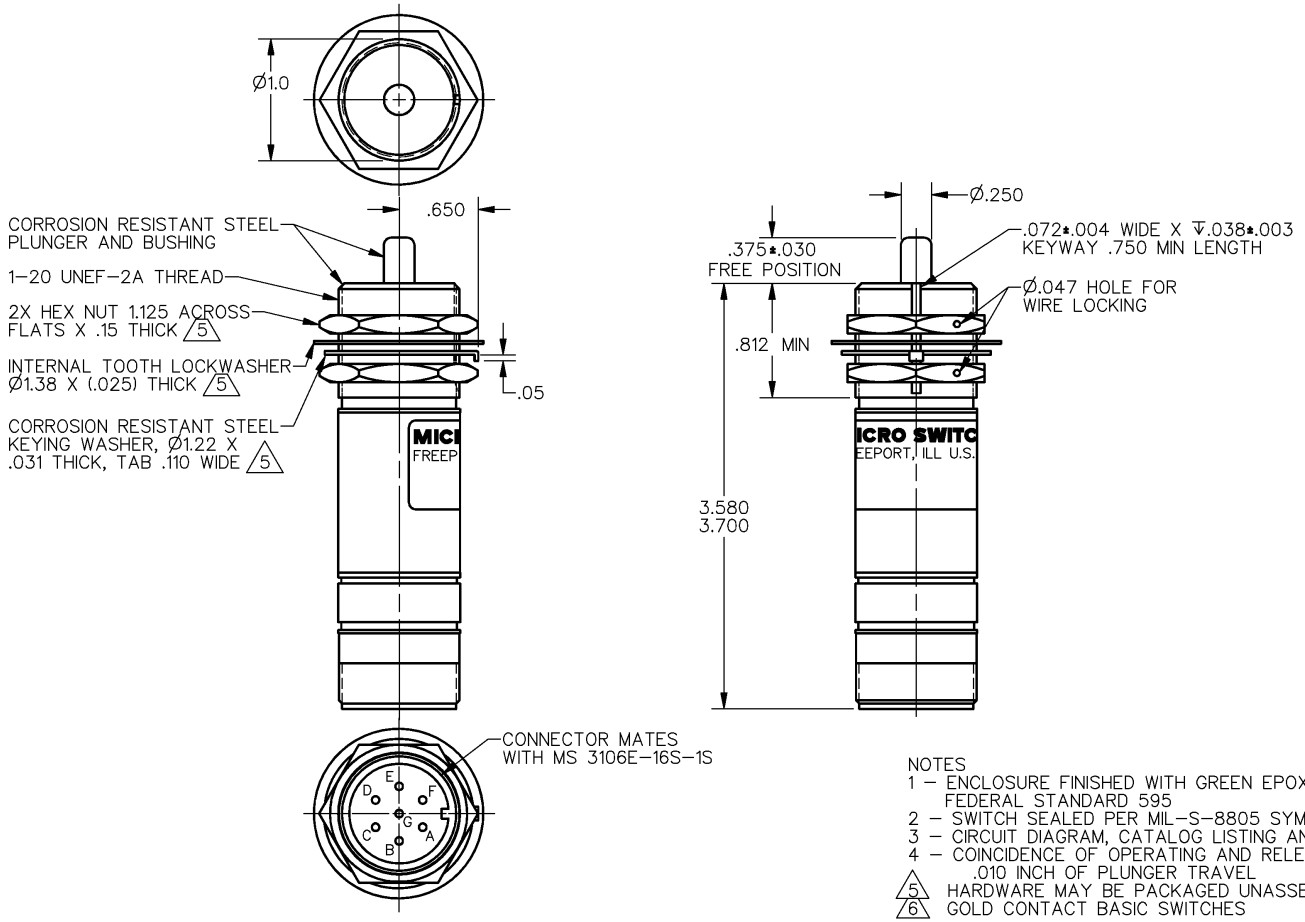

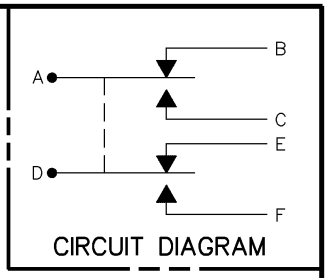

NOTES
1 – ENCLOSURE FINISHED WITH GREEN EPOXY BASED ENAMEL COLOR NO. 34151 PER FEDERAL STANDARD 595
2 – SWITCH SEALED PER MIL–S–8805 SYMBOL 4
3 – CIRCUIT DIAGRAM, CATALOG LISTING AND DATE CODE ARE SHOWN ON NAMEPLATE
4 – COINCIDENCE OF OPERATING AND RELEASING POINTS: .010 INCH OF PLUNGER TRAVEL
5 HARDWARE MAY BE PACKAGED UNASSEMBLED PER MIL–S–8805
6 GOLD CONTACT BASIC SWITCHES

THIS DRAWING COVERS A PROPRIETARY ITEM AND IS THE PROPERTY OF MICRO SWITCH. A DIVISION OF HONEYWELL. THIS DRAWING IS NOT TO BE COPIED OR USED WITHOUT THE APPROVAL OF MICRO SWITCH

CHARACTERISTICS

OPERATING FORCE	6–12 LB
FULL OVERTRAVEL	30 LB MAX
RELEASE FORCE	4 LB MIN
PRETRAVEL	.040 MAX
DIFFERENTIAL TRAVEL	.020 MAX
OVERTRAVEL	.250 MIN

ELECTRICAL DATA

CONTACT ARRANGEMENT 2X S P D T 6

LOAD	28 VDC SEA LEVEL	28 VDC 50,000 FT.
RES	1	1
IND	.5	.5

THIRD ANGLE PROJECTION

SCALE FULL

DO NOT SCALE PRINT

UNLESS OTHERWISE SPECIFIED TOLERANCES ARE

ONE PLACE	(.0)	±.030
TWO PLACE	(.00)	±.015
THREE PLACE	(.000)	±.005
ANGLES		±

WEIGHT 7.0 OZ MAX

ANSI Y14.5M–1982 APPLIES

CATALOG LISTING 1EN330–R3
PAGE 1 OF 1
ISSUE 2
RELEASE NO. PR–22923
REPLACES
CHECK
REVISIONS
A PR22923 T S M 2 SEP 97
DRAWN T S M 2 SEP 97
DDM/CAD