FCA-210 -DY9 Product Details

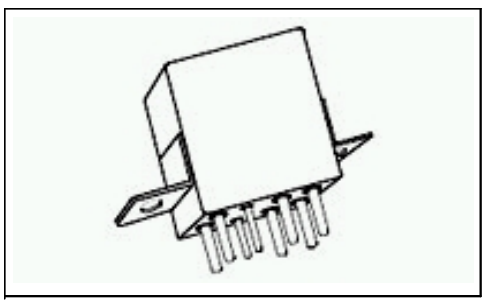

FCA-210 -DY9

Active

Military/Aerospace Mid -Range Relays

Not EU RoHS or ELV Compliant

Product Highlights:

- FCA 10-25 Amp Relay Series
- AC Actuating System
- Coil Voltage = 115 VAC
- Frequency = 50/400 Hz
- Contact Arrangement = 2 Form C, DPDT, 2 C/O

View all Features | Find Similar Products

Quick Links

Check Pricing & Availability
Search for Tooling
Product Feature Selector
Contact Us About This Product

Documentation & Additional Information

Product Drawings:
- MSD RELAY (PDF, English)

Catalog Pages/Data Sheets:
- None Available

Product Specifications:
- None Available

Application Specifications:
- None Available

Instruction Sheets:
- None Available

CAD Files:
- None Available

List all Documents

Additional Information:
- Product Line Information

Additional Product Images:
- Dimensional Drawing
- Wiring Diagram
- Terminal Type

Related Products:
- Tooling

Product Features (Please use the Product Drawing for all design activity)

Product Type Features:
- Terminal Type = Socket Pins

Electrical Characteristics:
- Actuating System = AC
- Coil Voltage (VAC) = 115
- Frequency = 50/400 Hz
- Current Rating (Amps.) = 10

Termination Related Features:
- Terminal Plating = Gold
- Auxiliary Contacts = Without

Body Related Features:
- Series = FCA 10 -25 Amp Relay
- Mount Type = Bottom Mount

Configuration Related Features:
- Contact Arrangement = 2 Form C, DPDT, 2 C/O
- Coil Suppression Diode = Without
- Coil Magnetic System = Polarized, Monostable

Industry Standards:
- Government/Industry Qualification = No
- RoHS/ELV Compliance = Not ELV/RoHS compliant
- Lead Free Solder Processes = Not relevant for lead free process

Other:
- Brand = CII

© 2008 Tyco Electronics Corporation All Rights Reserved