MICRO SWITCH
FREEPORT, ILLINOIS, U.S.A.
A DIVISION OF HONEYWELL
FED. MFG. CODE 91929

SWITCH-TOGGLE

CATALOG LISTING
102TL2 SERIES
CHART 1

THIS DRAWING COVERS A PROPRIETARY ITEM AND IS THE PROPERTY OF MICRO SWITCH. A DIVISION OF HONEYWELL. THIS DRAWING IS NOT TO BE COPIED OR USED WITHOUT THE APPROVAL OF MICRO SWITCH.

MS NUMBER	CATALOG LISTING	CIRCUIT MADE WITH TOGGLE LEVER IN (5) KEYWAY SIDE (1-2,4-5)	CENTER (1-2,4-5)	OPPOSITE KEYWAY (2-3,5-6)	MILITARY RATING (AMPS) RESISTIVE LOAD DC VOLTS 28	125	250	AC VOLTS 125	250	LAMP LOAD 28 VDC	125 VAC	INDUCTIVE LOAD 28 VDC	125 VAC
MS 27785-21	102TL2-1	ON	OFF	ON									
MS 27785-22	102TL2-2	OFF	NONE	ON									
MS 27785-23	102TL2-3	ON	NONE	ON	7.5	.75	.5	7.5	6	7	4	7.5	7.5
MS 27785-24	102TL2-21	NONE	OFF	ON									
MS 27785-33	102TL2-31	NONE	ON	ON									
MS 27785-29	(G)	MOM OFF	NONE	ON									
MS 27785-31	102TL2-5	MOM ON	OFF	ON									
MS 27785-30	(J)	MOM ON	NONE	OFF									
MS 27785-27	102TL2-7	MOM ON	OFF	MOM ON	7.5	.75	.5	7.5	6	5	2	7.5	7.5
MS 27785-26	102TL2-8	MOM ON	NONE	ON									
MS 27785-32	102TL2-51	NONE	ON	MOM ON									
MS 27785-28	102TL2-61	MOM ON	OFF	NONE									

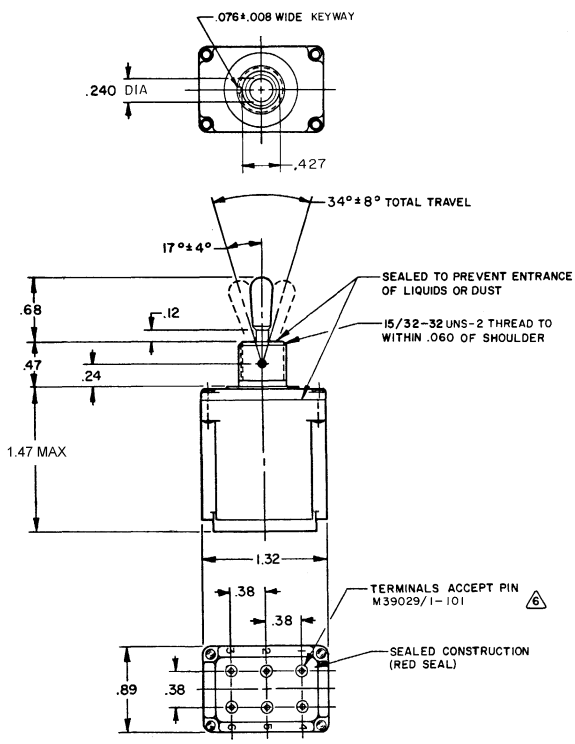

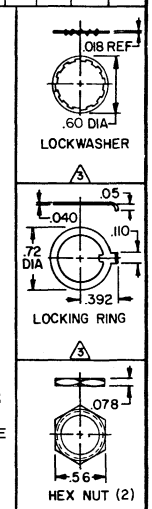

NOTES
1 - SWITCHES ARE CAPABLE OF WITHSTANDING A TEMPERATURE OF 160°F CONTINUOUSLY AT FULL RATED LOAD
2 - CIRCUIT DESIGNATION, MICRO SWITCH CATALOG LISTING, DATE CODE AND MS NUMBER IDENTIFIED ON SIDE OF SWITCH
(3) FURNISHED UNASSEMBLED
4 - UNUSED TERMINAL HOLES MAY BE SEALED WITH PLUGS M83723/28-20
(5) APPLIES ONLY TO "ON" AND "MOMENTARY ON" POSITIONS
(6) THE SEALING GROMMET SHALL SEAL ON A SMOOTH WIRE INSULATION OF .040 TO .083 DIAMETERS (16-20 GAGE)
7 THESE SWITCHES ARE QUALIFIED UNDER MIL-DTL-3950

SCALE FULL
DO NOT SCALE PRINT
UNLESS OTHERWISE NOTED
DIMENSIONS ARE IN INCHES
TOLERANCES ARE:
ONE PLACE (.0) ±.030
TWO PLACE (.00) ±.015
THREE PLACE (.000) ±.005
ANGLES ±
WEIGHT .135 LB MAX

ISSUE 29 M CATALOG LISTING 102TL2 SERIES CHART 1 PAGE 1 OF 1
RELEASE NO. PR-5108
REPLACES
CHECK
REVISIONS
L 0057247
SSK 06OCT09
06OCT09
CMH
CHECK
21 APR 78
CEB
CHECK
13 FEB 78
DRAWN
TMM
RASTER

Downloaded from Elcodis.com electronic components distributor