THIS DRAWING IS UNPUBLISHED. RELEASED FOR PUBLICATION -,- .
© COPYRIGHT - By - ALL RIGHTS RESERVED.

LOC	DIST
FT	0

REVISIONS

P	LTR	DESCRIPTION	DATE	DWN	APVD
	C14	REVISED PER ECO-13-016787	29OCT2013	KH	MM

PHYSICAL PROPERTIES:
HOUSING MATERIAL: THERMOPLASTIC, PC
FLAMABILITY: UL94V-0
COLOR: BLACK

TERMINAL:
TERMINALS: BRASS, TIN PLATED
SCREWS: 6-32 STEEL, NICKEL PLATED

MECHANICAL:
PITCH: .437
WIRE RANGE: 14-22 AWG
RECOMMENDED TIGHTENING
TORQUE: 12IN-LB

ELECTRICAL PROPERTIES:
MAX CURRENT: 25A
OPERATING VOLTAGE: 300V

ENVIRONMENTAL PROPERTIES:
OPERATING TEMP: -40°C TO 120°C

1. MARKED WITH WHITE INK APPROX AS SHOWN.
2. SEE FIGURE.
3. PRELIMINARY PART NUMBER.
4. TE LOGO LOCATED APPROXIMATE AREA SHOWN.

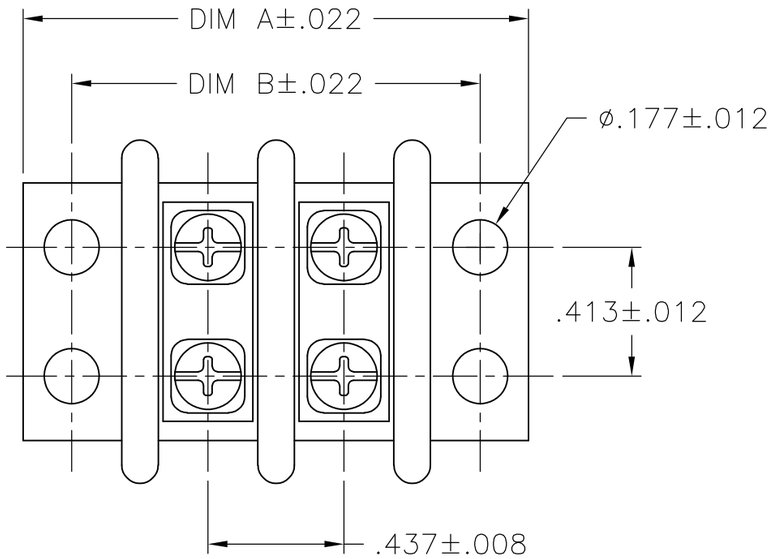

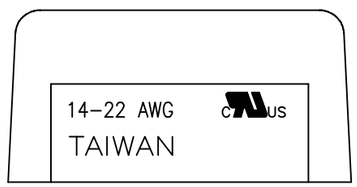

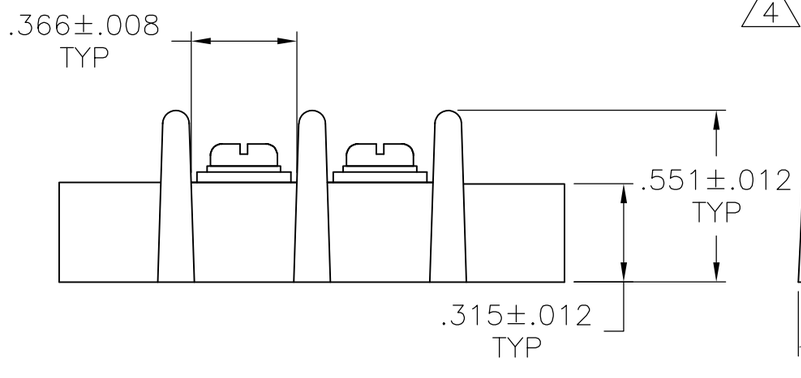

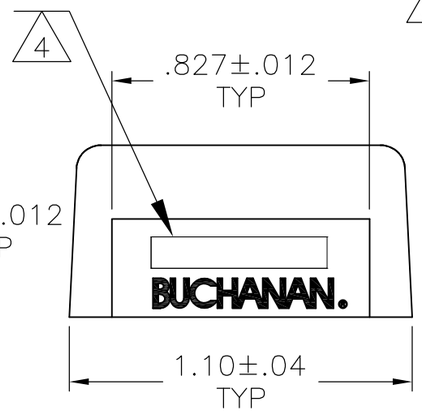

	DIM B	DIM A	NO OF POS	PART NUMBER
	11.764	12.110	26	2-1546671-6
	11.327	11.673	25	2-1546671-5
	10.90	11.236	24	2-1546671-4
	10.453	10.799	23	2-1546671-3
	10.016	10.362	22	2-1546671-2
	9.579	9.925	21	2-1546671-1
	9.142	9.488	20	2-1546671-0
	8.705	9.051	19	1-1546671-9
	8.268	8.614	18	1-1546671-8
	7.831	8.177	17	1-1546671-7
	7.394	7.740	16	3-1546671-4
	7.394	7.740	16	3-1546671-0
2 1	7.394	7.740	16	2-1546671-9
3 2 1	7.394	7.740	16	1-1546671-6
	6.957	7.303	15	1-1546671-5
	6.520	6.866	14	3-1546671-3
2	6.520	6.866	14	2-1546671-8
	6.520	6.866	14	1-1546671-4
	6.083	6.429	13	1-1546671-3
	5.646	5.992	12	1-1546671-2
	5.209	5.555	11	1-1546671-1
	4.772	5.118	10	1-1546671-0
3 2	4.335	4.681	9	2-1546671-7
	4.335	4.681	9	1546671-9
	3.898	4.244	8	1546671-8
	3.461	3.807	7	1546671-7
3	3.024	3.370	6	3-1546671-1
	3.024	3.370	6	1546671-6
	2.587	2.933	5	1546671-5
	2.150	2.496	4	1546671-4
	1.713	2.059	3	1546671-3
	1.276	1.622	2	1546671-2

THIS DRAWING IS A CONTROLLED DOCUMENT.

DIMENSIONS: INCHES

TOLERANCES UNLESS OTHERWISE SPECIFIED:

0 PLC	± -
1 PLC	± -
2 PLC	± .01
3 PLC	± .005
4 PLC	± -
ANGLES	± 2°

MATERIAL -
FINISH -

DWN	S SCHEGEL	4/4/03
CHK	C RICHARD	4/4/03
APVD	C RICHARD	4/4/03
PRODUCT SPEC	—	
APPLICATION SPEC	—	
WEIGHT	—	

CUSTOMER DRAWING

TE Connectivity

NAME: DOUBLE ROW BARRIER STRIP W/ WIRE CLAMP, .437 SPACING

SIZE	CAGE CODE	DRAWING NO	RESTRICTED TO
A3	00779	C-1546671	—

SCALE NTS | SHEET 1 OF 3 | REV C14

THIS DRAWING IS UNPUBLISHED. RELEASED FOR PUBLICATION -,- .
© COPYRIGHT - By - ALL RIGHTS RESERVED.

LOC	DIST
FT	0

REVISIONS

P	LTR	DESCRIPTION	DATE	DWN	APVD
	-	SEE SHEET 1	-	-	-

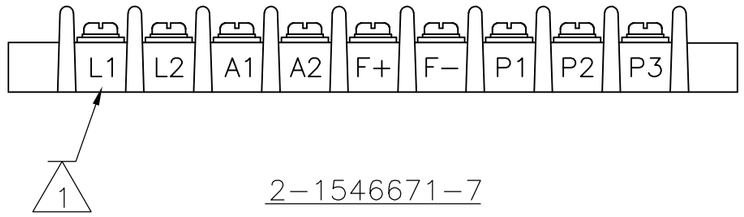

2-1546671-7

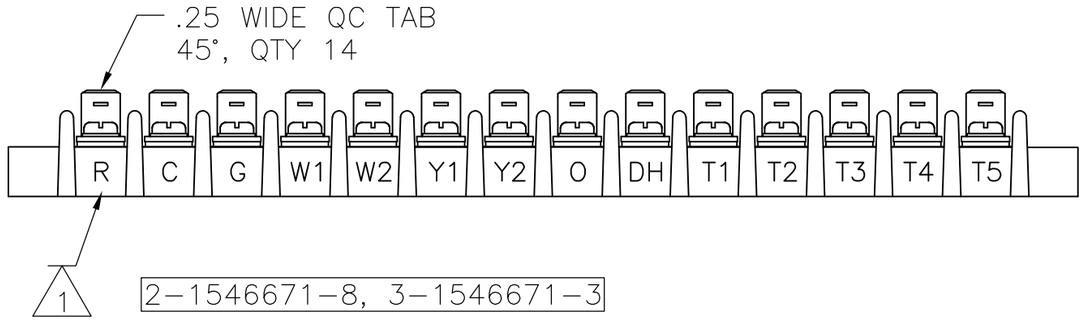

2-1546671-8, 3-1546671-3

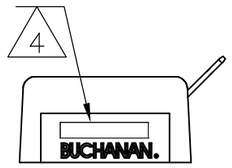

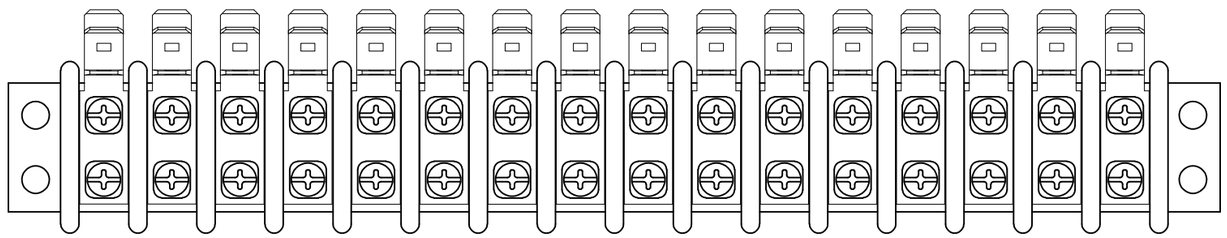

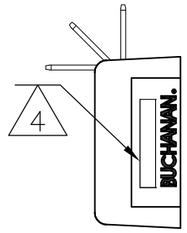

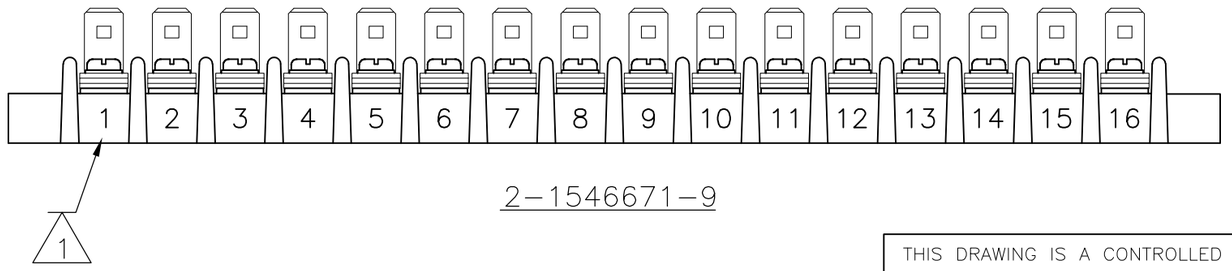

2-1546671-9

THIS DRAWING IS A CONTROLLED DOCUMENT.

DIMENSIONS: INCHES

TOLERANCES UNLESS OTHERWISE SPECIFIED:

0 PLC	± -
1 PLC	± -
2 PLC	± .01
3 PLC	± .005
4 PLC	± -
ANGLES	± 2°

MATERIAL -

FINISH -

DWN	S SCHEGEL	4/4/03
CHK	C RICHARD	4/4/03
APVD	C RICHARD	4/4/03
PRODUCT SPEC	—	
APPLICATION SPEC	—	
WEIGHT	—	

CUSTOMER DRAWING

TE Connectivity

NAME: DOUBLE ROW BARRIER STRIP W/ WIRE CLAMP, .437 SPACING

SIZE	CAGE CODE	DRAWING NO	RESTRICTED TO
A3	00779	C-1546671	—

SCALE	SHEET	REV
NTS	2 OF 3	C14

THIS DRAWING IS UNPUBLISHED. RELEASED FOR PUBLICATION -,- .
© COPYRIGHT - By - ALL RIGHTS RESERVED.

LOC	DIST
FT	0

REVISIONS

P	LTR	DESCRIPTION	DATE	DWN	APVD
	-	SEE SHEET 1	-	-	-

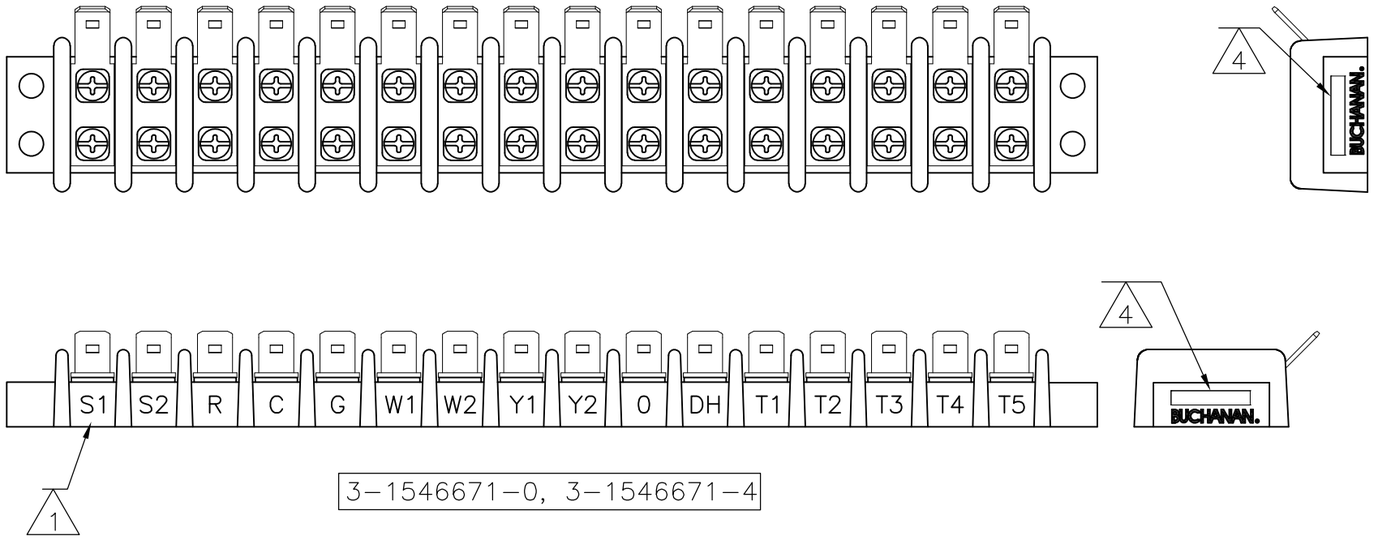

3-1546671-0, 3-1546671-4

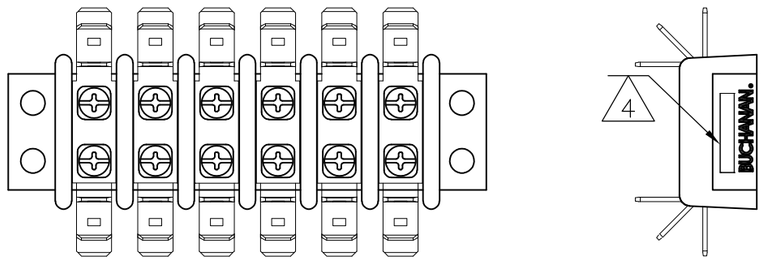

3-1546671-1

THIS DRAWING IS A CONTROLLED DOCUMENT.		DWN S SCHEGEL 4/4/03	TE Connectivity
DIMENSIONS: INCHES	TOLERANCES UNLESS OTHERWISE SPECIFIED: 0 PLC ± - 1 PLC ± - 2 PLC ± .01 3 PLC ± .005 4 PLC ± - ANGLES ± 2°	CHK C RICHARD 4/4/03	NAME DOUBLE ROW BARRIER STRIP W/ WIRE CLAMP, .437 SPACING
		APVD C RICHARD 4/4/03	
		PRODUCT SPEC —	
		APPLICATION SPEC —	SIZE A3 / CAGE CODE 00779 / DRAWING NO C-1546671 / RESTRICTED TO —
MATERIAL -	FINISH -	WEIGHT —	
		CUSTOMER DRAWING	SCALE NTS / SHEET 3 OF 3 / REV C14

Mouser Electronics

Authorized Distributor

Click to View Pricing, Inventory, Delivery & Lifecycle Information:

TE Connectivity:

1546671-3