MICRO SWITCH
FREEPORT ILLINOIS, U.S.A
A DIVISION OF HONEYWELL
FED. MFG. CODE 91929

SWITCH–BASIC

CATALOG LISTING
ISE227

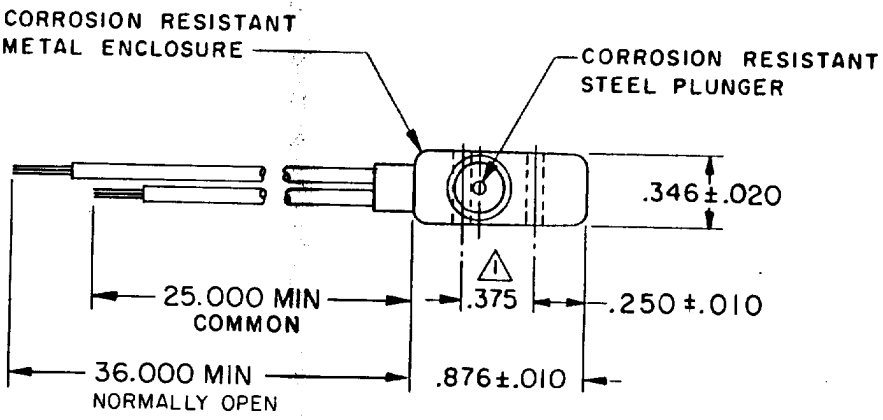

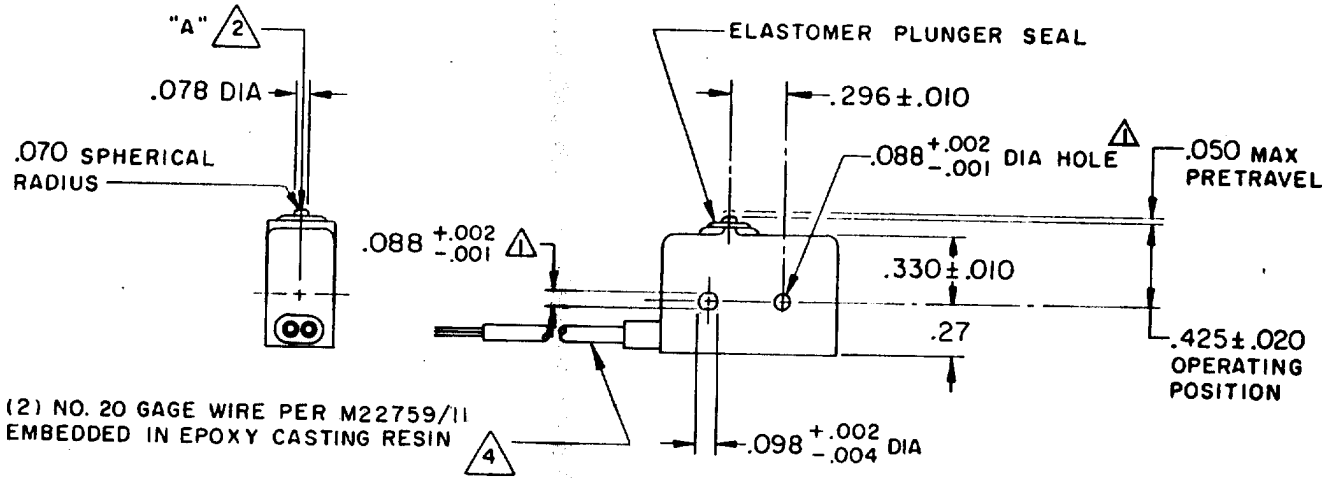

NOTE–

1. MOUNTING HOLES WILL ACCEPT PINS OR SCREWS OF .087 MAX DIA ON .375±.002 CENTERS
2. ACTUATION IN LINE WITH ARROW "A" IS RECOMMENDED
3. WEIGHT OF SWITCH ONLY IS .26 OZ MAX. WEIGHT OF SWITCH WITH LEADS IS 1.72 OZ MAX
4. WIRE LEADS MARKED WITH BLACK INK EACH 3.0 MAX AS FOLLOWS: NO-20 AND C-20 PER MIL-W-5088

THIS DRAWING COVERS A PROPRIETARY ITEM AND IS THE PROPERTY OF MICRO SWITCH, A DIVISION OF HONEYWELL. THIS DRAWING IS NOT TO BE COPIED OR USED WITHOUT THE APPROVAL OF MICRO SWITCH.

THIRD ANGLE PROJECTION

CHARACTERISTICS

OPERATING FORCE - - - - - - - 5-17 OZ

RELEASE FORCE - - - - - - - - 4 OZ MIN

RELEASE TRAVEL - - - - - - - - - .004 MIN

DIFFERENTIAL TRAVEL - - - - - .004 MAX

OVERTRAVEL - - - - - - - - - - - - .003 MIN

ELECTRICAL DATA

CONTACT ARRANGEMENT
S P N O

250 VAC - - - - - - - - - - - - - 5 AMP

30 VOLTS DC RATING

INDUCTIVE - - - - SEA LEVEL - - 3 AMP
50,000 FT - - 2.5 AMP

RESISTIVE - - - - SEA LEVEL - - 5 AMP
50,000 FT - - - 5 AMP

MAXIMUM INRUSH - - - - - - - - - 24 AMP

SCALE FULL

DO NOT SCALE PRINT

TOLERANCES
APPLY TO DESIGN UNITS. CONVERSIONS ARE ONLY FOR REFERENCE. UNLESS NOTED, TOLERANCES ARE ±

	DIM. mm	TOL. mm/in	DIM. in	TOL. mm/in
NO PLACES	X	1/.04		
ONE PLACE	X.X	0.4/.016	X.X	0.8/.03
TWO PLACES	X.XX	0.15/.006	X.XX	0.38/.015
THREE PLACES			X.XXX	0.13/.005
ANGLES				

DESIGN UNITS SI METRIC ☐ US CUSTOMARY ■

WEIGHT 3

ISE227 | M | DRAWING NUMBER | ISSUE 6 | RELEASE NO. PR-12574 | REPLACES

REVISIONS

A	REL PR-12574	TSK 9 DEC 83
B	C056103	CJH 12 NOV 84
C	C057041A	CJH 21 MAR 85
D	C057876	CJH 20 SEP 85
E	C062731	JAP 8 JAN 88

CHECK | CHECK | CHECK | TSK 9 DEC 83 | KAG 9 DEC 83 | DRAWN | FO-52848-A

Downloaded from Elcodis.com electronic components distributor