Part Number: 0003091033

Status: Active

Overview: Standard .093" Pin and Socket Connectors

Description: 2.36mm Diameter Standard .093" Pin and Socket Receptacle Housing, 3 Circuits, Single Row, Free-Hanging, without Passive Lock Ramps

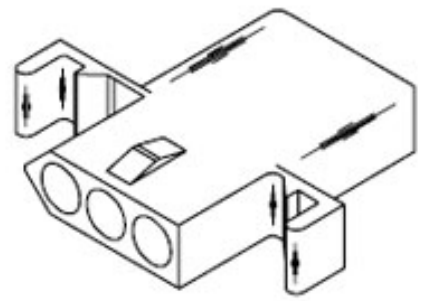

Series image - Reference only

Documents:

3D Model
Drawing (PDF)
Product Specification PS-02-09 (PDF)
Product Specification PS-43660-9999-001 (PDF)
Packaging Specification PK-1396-002-001 (PDF)
RoHS Certificate of Compliance (PDF)

Agency Certification

CSA	LR19980
UL	E29179

General

Product Family	Crimp Housings
Series	1396
Application	Power, Wire-to-Wire
Comments	17.0A max. can be achieved when housing is used with 42477 or 42478 terminals
Overview	Standard .093" Pin and Socket Connectors
Product Name	Standard .093"
UPC	800753615076

Physical

Circuits (maximum)	3
Color - Resin	Natural
Flammability	94V-2
Gender	Receptacle
Glow-Wire Compliant	No
Lock to Mating Part	None
Material - Resin	Nylon
Net Weight	1.655/g
Number of Rows	1
Packaging Type	Bag
Panel Mount	No
Pitch - Mating Interface	5.03mm
Stackable	No
Temperature Range - Operating	-40°C to +105°C

Electrical

Current - Maximum per Contact	14.0A

Material Info

Engineering Number	1396-R2

Reference - Drawing Numbers

Packaging Specification	PK-1396-002-001
Product Specification	PS-02-09, PS-43660-9999-001
Sales Drawing	SD-1396-*, SD-1396-001

EU ELV
Not Relevant

EU RoHS
Compliant

China RoHS

REACH SVHC
Not Contained Per -ED/01/2017 (12 January 2017)

Halogen-Free Status
Low-Halogen

Need more information on product environmental compliance?

Email productcompliance@molex.com
Please visit the Contact Us section for any non-product compliance questions.

China ROHS	Green Image
ELV	Not Relevant
RoHS Phthalates	Not Contained

Search Parts in this Series
1396 Series

Mates With
03-09-2031 , 03-09-2032 , 03-09-7032 , 3099

Use With
1189 Crimp Terminals, 1190 Crimp Terminals, 1376 Male PC Tail Terminals, 1377 Female PC Tail Terminals, 1380 Male Crimp Terminals, 1381 Female Crimp Terminals, 1433 Crimp Terminals, 1434 Male Crimp Terminals, 1973