TEST POINT JACKS

09-9203-1-035XX — TEST POINT , INSULATED SIDE MOUNT P.C.JACK FOR .080 PIN

BASIC PART NO. FINISH COLOR

ACCEPTS .080±.001 PIN

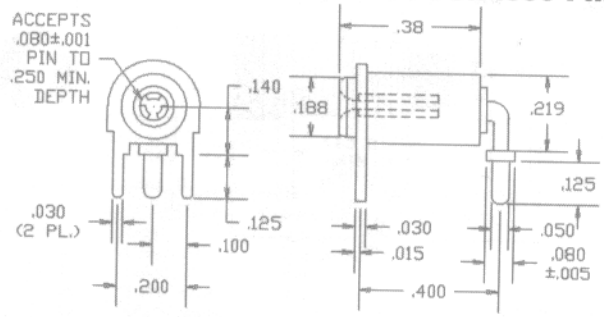

PART NUMBER	INSULATION	TERMINAL BODY	JACK SPRING	MTG. STAMPING
09-9203-1-035XX	SEE COLOR CHART (PTFE)	GOLD (BRASS)	GOLD (BERYLLIUM COPPER)	GOLD BRASS

MANUFACTURED TO CONFORM TO THE DIMENSIONAL, MATERIAL AND PERFORMANCE REQUIREMENTS OF MIL-C-39024/4

09-9069-1-XX — EDGE MOUNT CLOSED ENTRY JACK FOR .040 PIN

BASIC PART NO. FINISH

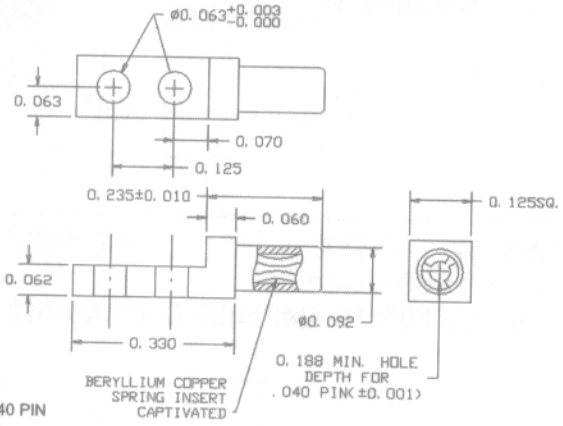

ACCEPTS .040 PIN

PART NO.	BODY (BRASS)	SPRING (BERYLLIUM COPPER)
09-9069-1-03	Gold	Gold
06	Electro Tin	Gold

09-9216-1-0319 JACK FOR .060 PIN, INSULATED GUIDED ENTRY

BASIC PART NO. FINISH COLOR

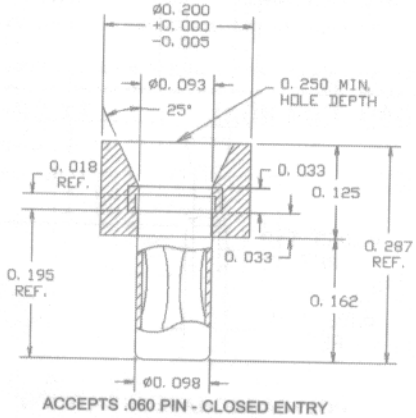

ACCEPTS .060 PIN - CLOSED ENTRY

PART NUMBER	BODY (BRASS)	SPRING (BERYLLIUM COPPER)	INSULATION (PTFE)
09-9216-1-0319	Gold	Gold	White

RECOMMENDED MOUNTING HOLE .102±.002 DIA.(#38 DRILL)

09-9306-1-035XX / 09-9307-1-035XX — NYLON INSULATED SIDE MOUNT JACK FOR .080 PIN

BASIC PART NO. FINISH COLOR

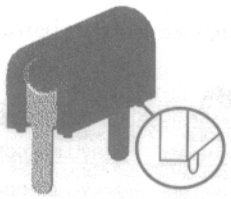

THIS TEST POINT JACK SOLVES CORROSION PROBLEMS ON P.C. BOARDS CAUSED BY CLEANING SOLUTIONS LEACHING FROM UNDER INSTALLED TEST POINT INSULATION. ***CONCORD'S*** TEST POINT JACKS, PART NUMBER **09-9306-1-035XX** AND **09-9307-1-035XX**. FEATURE FOUR (4) SMALL STANDOFFS WHICH SLIGHTLY ELEVATE THE BASE OF JACK, PERMITTING CLEANING SOLUTION TO PASS UNDERNEATH FOR A MORE COMPLETE RINSING IN ACCORDANCE WITH **MIL-STD 2000A**

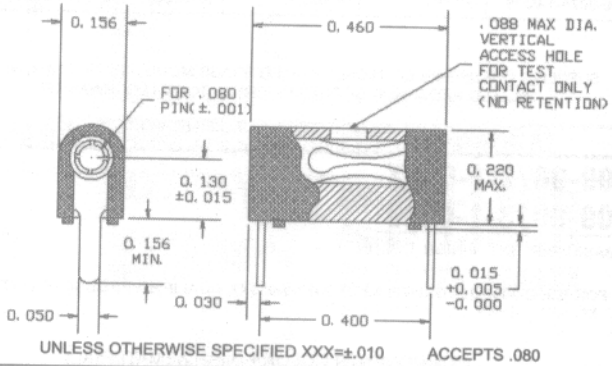

UNLESS OTHERWISE SPECIFIED XXX=±.010 ACCEPTS .080

PART NUMBER	CONTACT MATERIAL	CONTACT FINISH	VERTICAL ACCESS HOLE
09-9306-1-035XX	BERYLLIUM COPPER	GOLD	WITHOUT HOLE
09-9307-035XX	BERYLLIUM COPPER	GOLD	WITH HOLE

09-9208-1-035XX — NYLON INSULATED SIDE MOUNT JACK FOR .080 PIN

BASIC PART NO FINISH COLOR

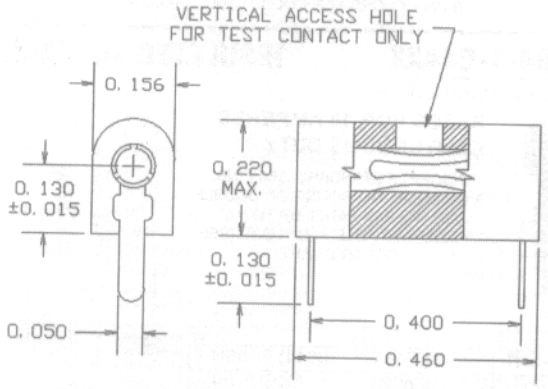

UNLESS OTHERWISE SPECIFIED XXX=±.010 ACCEPTS .080 PIN

PART NUMBER	CONTACT MATERIAL	CONTACT FINISH
09-9208-1-035XX	BERYLLIUM COPPER	GOLD

MANUFACTURED TO MEET DIMENSIONAL MATERIAL & PERFORMANCE REQUIREMENTS OF MIL-C-39024/11

09-9221-1-044XX — NYLON INSULATED VERTICAL TEST JACK FOR .080 PIN

BASIC PART NO. FINISH COLOR

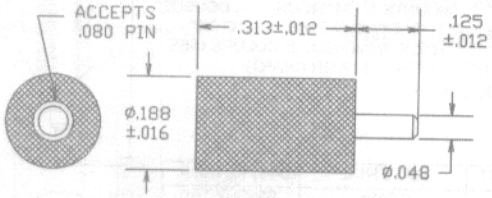

PART NUMBER	PIN / CONTACT (BERYLLIUM COPPER)	INSULATION (NYLON)
09-9221-1-044XX	Gold	See color chart

RECOMMENDED MOUNTING HOLE .052±.002 DIA.

FOR ADDITIONAL SIZES AND MATERIALS, CONTACT FACTORY

BLK	BRN	RED	ORN	YEL	GRN	BLU	PUR	GRY	WHT
10	11	12	13	14	15	16	17	18	19

CONCORD®

e-mail : info@concord-elex.com
800-847-4162 (outside N.Y.S.)
212-777-6571 • fax. 212-995-0161